WARRANTY

WARRANTY to **Transbay Joint Powers Authority**
(Owner Name)
201 Mission, Suite 2100, San Francisco, CA
(Owner Address)

We hereby warrant and guarantee that the _____
(Description of Work)

_____

which we have installed at Transbay Transit Center has been done in strict accordance with the plans and specifications, and that the work installed will fulfill the requirements of those specifications.

We agree to repair or replace, or cause to be repaired or replaced, any or all of the work which may prove to be defective in workmanship or materials, together with any adjacent work which required repair or replacement because of our defective work within a period of _____ year(s) from the filing of the Notice of Completion on all improvements, or acceptance by the Owner of the building, whichever is later.

If we fail to commence to comply with the above paragraph within ten (10) days after receipt of written notice, or fail to pursue such compliance with diligence, we jointly, and severally, do hereby authorize the Owner or the General Contractor to proceed to have the defects repaired and made good at our sole expense, and we will honor and pay the costs and charges for it together with interest at the maximum rate permitted by law upon demand. If we fail to fulfill the preceding obligations, and if Owner or General Contractor bring an action to enforce this Warranty, we agree to pay Owner or General Contractor reasonable attorney's fees incurred in connection therewith.

SUBCONTRACTOR:	CONTRACTOR:
_____	WEBCOR/OBAYASHI JOINT VENTURE
BY:_____	BY:_____
DATE:_____	DATE:_____
LICENSE NO._____	LICENSE NO. 928731A, B, C-8

LOCAL REPRESENTATIVE TO BE CONTACTED FOR SERVICE:

NAME:_____

ADDRESS:_____

TELEPHONE:_____

Exhibit C

LIEN RELEASES

Form Number	Form Title
1034	Conditional Waiver and Release Upon Progress Payment
1035	Unconditional Waiver and Release Upon Progress Payment
1036	Conditional Waiver and Release Upon Final Payment
1037	Unconditional Waiver and Release Upon Final Payment

CONDITIONAL WAIVER AND RELEASE ON PROGRESS PAYMENT
***California Civil Code* Section 8132**

NOTICE: THIS DOCUMENT WAIVES THE CLAIMANT'S LIEN, STOP PAYMENT NOTICE, AND PAYMENT BOND RIGHTS EFFECTIVE ON RECEIPT OF PAYMENT. A PERSON SHOULD NOT RELY ON THIS DOCUMENT UNLESS SATISFIED THAT THE CLAIMANT HAS RECEIVED PAYMENT.

Identifying Information

Name of Claimant: _____
Name of Customer: Webcor/Obayashi Joint Venture
Job Location: Transbay Transit Center 425 Mission St. San Francisco, California
Owner: Transbay Joint Powers Authority
Through Date: _____

Conditional Waiver and Release

This document waives and releases lien, stop payment notice, and payment bond rights the claimant has for labor and service provided, and equipment and material delivered, to the customer on this job through the Through Date of this document. Rights based upon labor or service provided, or equipment or material delivered, pursuant to a written change order that has been fully executed by the parties prior to the date that this document is signed by the claimant, are waived and released by this document, unless listed as an Exception below. This document is effective only on the claimant's receipt of payment from the financial institution on which the following check is drawn:

Maker of Check: Webcor/Obayashi Joint Venture
Amount of Check: $_____
Check Payable to: _____

Exceptions

This document does not affect any of the following:
(1) Retentions.
(2) Extras for which the claimant has not received payment.
(3) The following progress payments for which the claimant has previously given a conditional waiver and release but has not received payment:
Date(s) of waiver and release:_____
Amount(s) of unpaid progress payment(s): $_____
(4) Contract rights, including (A) a right based on rescission, abandonment, or breach of contract, and (B) the right to recover compensation for work not compensated by the payment.

Signature
Claimant's Signature: _____
Claimant's Title: _____
Date of Signature: _____

UNCONDITIONAL WAIVER AND RELEASE ON PROGRESS PAYMENT
***California Civil Code* Section 8134**

NOTICE TO CLAIMANT: THIS DOCUMENT WAIVES AND RELEASES LIEN, STOP PAYMENT NOTICE, AND PAYMENT BOND RIGHTS UNCONDITIONALLY AND STATES THAT YOU HAVE BEEN PAID FOR GIVING UP THOSE RIGHTS. THIS DOCUMENT IS ENFORCEABLE AGAINST YOU IF YOU SIGN IT, EVEN IF YOU HAVE NOT BEEN PAID. IF YOU HAVE NOT BEEN PAID, USE A CONDITIONAL WAIVER AND RELEASE FORM.

Identifying Information

Name of Claimant: _____
Name of Customer: Webcor/Obayashi Joint Venture
Job Location: Transbay Transit Center 425 Mission St. San Francisco, California
Owner: Transbay Joint Powers Authority
Through Date: _____

Unconditional Waiver and Release

This document waives and releases lien, stop payment notice, and payment bond rights the claimant has for labor and service provided, and equipment and material delivered, to the customer on this job through the Through Date of this document. Rights based upon labor or service provided, or equipment or material delivered, pursuant to a written change order that has been fully executed by the parties prior to the date that this document is signed by the claimant, are waived and released by this document, unless listed as an Exception below. The claimant has received the following progress payment: $_____

Exceptions

This document does not affect any of the following:
(1) Retentions.
(2) Extras for which the claimant has not received payment.
(3) Contract rights, including (A) a right based on rescission, abandonment, or breach of contract, and (B) the right to recover compensation for work not compensated by the payment.

Signature

Claimant's Signature: _____
Claimant's Title: _____
Date of Signature: _____

CONDITIONAL WAIVER AND RELEASE ON FINAL PAYMENT
***California Civil Code* Section 8136**

NOTICE: THIS DOCUMENT WAIVES THE CLAIMANT'S LIEN, STOP PAYMENT NOTICE, AND PAYMENT BOND RIGHTS EFFECTIVE ON RECEIPT OF PAYMENT. A PERSON SHOULD NOT RELY ON THIS DOCUMENT UNLESS SATISFIED THAT THE CLAIMANT HAS RECEIVED PAYMENT.

Identifying Information

Name of Claimant: _____
Name of Customer: Webcor/Obayashi Joint Venture
Job Location: Transbay Transit Center 425 Mission St. San Francisco, California
Owner: Transbay Joint Powers Authority

Conditional Waiver and Release

This document waives and releases lien, stop payment notice, and payment bond rights the claimant has for labor and service provided, and equipment and material delivered, to the customer on this job. Rights based upon labor or service provided, or equipment or material delivered, pursuant to a written change order that has been fully executed by the parties prior to the date that this document is signed by the claimant, are waived and released by this document, unless listed as an Exception below. This document is effective only on the claimant's receipt of payment from the financial institution on which the following check is drawn:

Maker of Check: Webcor/Obayashi Joint Venture
Amount of Check: $_____
Check Payable to: _____

Exceptions

This document does not affect any of the following:
Disputed claims for extras in the amount of: $_____

Signature

Claimant's Signature: _____
Claimant's Title: _____
Date of Signature: _____

UNCONDITIONAL WAIVER AND RELEASE ON FINAL PAYMENT
***California Civil Code* Section 8138**

NOTICE TO CLAIMANT: THIS DOCUMENT WAIVES AND RELEASES LIEN, STOP PAYMENT NOTICE, AND PAYMENT BOND RIGHTS UNCONDITIONALLY AND STATES THAT YOU HAVE BEEN PAID FOR GIVING UP THOSE RIGHTS. THIS DOCUMENT IS ENFORCEABLE AGAINST YOU IF YOU SIGN IT, EVEN IF YOU HAVE NOT BEEN PAID. IF YOU HAVE NOT BEEN PAID, USE A CONDITIONAL WAIVER AND RELEASE FORM.

Identifying Information

Name of Claimant: _____
Name of Customer: Webcor/Obayashi Joint Venture
Job Location: Transbay Transit Center 425 Mission St. San Francisco, California
Owner: Transbay Joint Powers Authority

Unconditional Waiver and Release

This document waives and releases lien, stop payment notice, and payment bond rights the claimant has for all labor and service provided, and equipment and material delivered, to the customer on this job. Rights based upon labor or service provided, or equipment or material delivered, pursuant to a written change order that has been fully executed by the parties prior to the date that this document is signed by the claimant, are waived and released by this document, unless listed as an Exception below. The claimant has been paid in full.

Exceptions

This document does not affect the following:
Disputed claims for extras in the amount of: $_____

Signature

Claimant's Signature: _____
Claimant's Title: _____
Date of Signature: _____

CONDITIONAL WAIVER AND RELEASE ON PROGRESS PAYMENT
***California Civil Code* Section 8132**

NOTICE: THIS DOCUMENT WAIVES THE CLAIMANT'S LIEN, STOP PAYMENT NOTICE, AND PAYMENT BOND RIGHTS EFFECTIVE ON RECEIPT OF PAYMENT. A PERSON SHOULD NOT RELY ON THIS DOCUMENT UNLESS SATISFIED THAT THE CLAIMANT HAS RECEIVED PAYMENT.

Identifying Information

Name of Claimant: _____
Name of Customer: _____
Job Location: Transbay Transit Center 425 Mission St. San Francisco, California
Owner: Transbay Joint Powers Authority
Through Date: _____

Conditional Waiver and Release

This document waives and releases lien, stop payment notice, and payment bond rights the claimant has for labor and service provided, and equipment and material delivered, to the customer on this job through the Through Date of this document. Rights based upon labor or service provided, or equipment or material delivered, pursuant to a written change order that has been fully executed by the parties prior to the date that this document is signed by the claimant, are waived and released by this document, unless listed as an Exception below. This document is effective only on the claimant's receipt of payment from the financial institution on which the following check is drawn:

Maker of Check: _____
Amount of Check: $_____
Check Payable to: _____

Exceptions

This document does not affect any of the following:
(1) Retentions.
(2) Extras for which the claimant has not received payment.
(3) The following progress payments for which the claimant has previously given a conditional waiver and release but has not received payment:
Date(s) of waiver and release:_____
Amount(s) of unpaid progress payment(s): $_____
(4) Contract rights, including (A) a right based on rescission, abandonment, or breach of contract, and (B) the right to recover compensation for work not compensated by the payment.

Signature
Claimant's Signature: _____
Claimant's Title: _____
Date of Signature: _____

UNCONDITIONAL WAIVER AND RELEASE ON PROGRESS PAYMENT
***California Civil Code* Section 8134**

NOTICE TO CLAIMANT: THIS DOCUMENT WAIVES AND RELEASES LIEN, STOP PAYMENT NOTICE, AND PAYMENT BOND RIGHTS UNCONDITIONALLY AND STATES THAT YOU HAVE BEEN PAID FOR GIVING UP THOSE RIGHTS. THIS DOCUMENT IS ENFORCEABLE AGAINST YOU IF YOU SIGN IT, EVEN IF YOU HAVE NOT BEEN PAID. IF YOU HAVE NOT BEEN PAID, USE A CONDITIONAL WAIVER AND RELEASE FORM.

Identifying Information

Name of Claimant: _____
Name of Customer: _____
Job Location: Transbay Transit Center 425 Mission St. San Francisco, California
Owner: Transbay Joint Powers Authority
Through Date: _____

Unconditional Waiver and Release

This document waives and releases lien, stop payment notice, and payment bond rights the claimant has for labor and service provided, and equipment and material delivered, to the customer on this job through the Through Date of this document. Rights based upon labor or service provided, or equipment or material delivered, pursuant to a written change order that has been fully executed by the parties prior to the date that this document is signed by the claimant, are waived and released by this document, unless listed as an Exception below. The claimant has received the following progress payment: $_____

Exceptions

This document does not affect any of the following:
(1) Retentions.
(2) Extras for which the claimant has not received payment.
(3) Contract rights, including (A) a right based on rescission, abandonment, or breach of contract, and (B) the right to recover compensation for work not compensated by the payment.

Signature

Claimant's Signature: _____
Claimant's Title: _____
Date of Signature: _____

CONDITIONAL WAIVER AND RELEASE ON FINAL PAYMENT
***California Civil Code* Section 8136**

NOTICE: THIS DOCUMENT WAIVES THE CLAIMANT'S LIEN, STOP PAYMENT NOTICE, AND PAYMENT BOND RIGHTS EFFECTIVE ON RECEIPT OF PAYMENT. A PERSON SHOULD NOT RELY ON THIS DOCUMENT UNLESS SATISFIED THAT THE CLAIMANT HAS RECEIVED PAYMENT.

Identifying Information

Name of Claimant: _____
Name of Customer: _____
Job Location: Transbay Transit Center 425 Mission St. San Francisco, California
Owner: Transbay Joint Powers Authority

Conditional Waiver and Release

This document waives and releases lien, stop payment notice, and payment bond rights the claimant has for labor and service provided, and equipment and material delivered, to the customer on this job. Rights based upon labor or service provided, or equipment or material delivered, pursuant to a written change order that has been fully executed by the parties prior to the date that this document is signed by the claimant, are waived and released by this document, unless listed as an Exception below. This document is effective only on the claimant's receipt of payment from the financial institution on which the following check is drawn:

Maker of Check: _____
Amount of Check: $_____
Check Payable to: _____

Exceptions

This document does not affect any of the following:
Disputed claims for extras in the amount of: $_____

Signature

Claimant's Signature: _____
Claimant's Title: _____
Date of Signature: _____

UNCONDITIONAL WAIVER AND RELEASE ON FINAL PAYMENT
***California Civil Code* Section 8138**

NOTICE TO CLAIMANT: THIS DOCUMENT WAIVES AND RELEASES LIEN, STOP PAYMENT NOTICE, AND PAYMENT BOND RIGHTS UNCONDITIONALLY AND STATES THAT YOU HAVE BEEN PAID FOR GIVING UP THOSE RIGHTS. THIS DOCUMENT IS ENFORCEABLE AGAINST YOU IF YOU SIGN IT, EVEN IF YOU HAVE NOT BEEN PAID. IF YOU HAVE NOT BEEN PAID, USE A CONDITIONAL WAIVER AND RELEASE FORM.

Identifying Information

Name of Claimant: _____
Name of Customer: _____
Job Location: Transbay Transit Center 425 Mission St. San Francisco, California
Owner: Transbay Joint Powers Authority

Unconditional Waiver and Release

This document waives and releases lien, stop payment notice, and payment bond rights the claimant has for all labor and service provided, and equipment and material delivered, to the customer on this job. Rights based upon labor or service provided, or equipment or material delivered, pursuant to a written change order that has been fully executed by the parties prior to the date that this document is signed by the claimant, are waived and released by this document, unless listed as an Exception below. The claimant has been paid in full.

Exceptions

This document does not affect the following:
Disputed claims for extras in the amount of: $_____

Signature

Claimant's Signature: _____
Claimant's Title: _____
Date of Signature: _____

Exhibit D

SAMPLE CERTIFICATE OF INSURANCE
AND ADDITIONAL INSURED ENDORSEMENT

Form Number	Form Title
ACCORD 25	Certificate of Liability Insurance
CG 201 10 11 85	Additional Insured - Owners, Lessees or Contractors (Form B) - Commercial General Liability
WC 04 03 06	Waiver of Our Right to Recover from Others Endorsement

CERTIFICATE OF LIABILITY INSURANCE

DATE (MM/DD/YYYY)

THIS CERTIFICATE IS ISSUED AS A MATTER OF INFORMATION ONLY AND CONFERS NO RIGHTS UPON THE CERTIFICATE HOLDER. THIS CERTIFICATE DOES NOT AFFIRMATIVELY OR NEGATIVELY AMEND, EXTEND OR ALTER THE COVERAGE AFFORDED BY THE POLICIES BELOW. THIS CERTIFICATE OF INSURANCE DOES NOT CONSTITUTE A CONTRACT BETWEEN THE ISSUING INSURER(S), AUTHORIZED REPRESENTATIVE OR PRODUCER, AND THE CERTIFICATE HOLDER.

IMPORTANT: If the certificate holder is an ADDITIONAL INSURED, the policy(ies) must be endorsed. If SUBROGATION IS WAIVED, subject to the terms and conditions of the policy, certain policies may require an endorsement. A statement on this certificate does not confer rights to the certificate holder in lieu of such endorsement(s).

PRODUCER
ANY AGENT OR BROKER
STREET ADDRESS
CITY, STATE, ZIP
PHONE/FAX

SAMPLE

CONTACT NAME:
PHONE (A/C, No, Ext):
FAX (A/C, No):
E-MAIL ADDRESS:

INSU		NAIC #
INSURER A :	XYZ INSURANCE COMPANY (RATED A-VII OR BETTER BY AM BEST)	
INSURER B :		
INSURER C :		
INSURER D :		
INSURER E :		
INSURER F :		

INSURED
ABC SUBCONTRACTOR
STREET ADDRESS
CITY, STATE, ZIP

COVERAGES **CERTIFICATE NUMBER:** **REVISION NUMBER:**

THIS IS TO CERTIFY THAT THE POLICIES OF INSURANCE LISTED BELOW HAVE BEEN ISSUED TO THE INSURED NAMED ABOVE FOR THE POLICY PERIOD INDICATED. NOTWITHSTANDING ANY REQUIREMENT, TERM OR CONDITION OF ANY CONTRACT OR OTHER DOCUMENT WITH RESPECT TO WHICH THIS CERTIFICATE MAY BE ISSUED OR MAY PERTAIN, THE INSURANCE AFFORDED BY THE POLICIES DESCRIBED HEREIN IS SUBJECT TO ALL THE TERMS, EXCLUSIONS AND CONDITIONS OF SUCH POLICIES. LIMITS SHOWN MAY HAVE BEEN REDUCED BY PAID CLAIMS.

INSR LTR	TYPE OF INSURANCE	ADDL INSR	SUBR WVD	POLICY NUMBER	POLICY EFF (MM/DD/YYYY)	POLICY EXP (MM/DD/YYYY)	LIMITS	
A	GENERAL LIABILITY X COMMERCIAL GENERAL LIABILITY CLAIMS-MADE X OCCUR GEN'L AGGREGATE LIMIT APPLIES PER: POLICY X PRO-JECT LOC	X	X	XYZ123456			EACH OCCURRENCE	$ 1,000,000
							DAMAGE TO RENTED PREMISES (Ea occurrence)	$ TBD
							MED EXP (Any one person)	$ TBD
							PERSONAL & ADV INJURY	$ 1,000,000
							GENERAL AGGREGATE	$ 2,000,000
							PRODUCTS - COMP/OP AGG	$ 2,000,000
								$
A	AUTOMOBILE LIABILITY X ANY AUTO ALL OWNED AUTOS SCHEDULED AUTOS HIRED AUTOS NON-OWNED AUTOS			XYZ654321			COMBINED SINGLE LIMIT (Ea accident)	$ 1,000,000
							BODILY INJURY (Per person)	$
							BODILY INJURY (Per accident)	$
							PROPERTY DAMAGE (Per accident)	$
								$
A	UMBRELLA LIAB X OCCUR EXCESS LIAB CLAIMS-MADE DED RETENTION $			XYZ123456			EACH OCCURRENCE	$
							AGGREGATE	$
								$
A	WORKERS COMPENSATION AND EMPLOYERS' LIABILITY ANY PROPRIETOR/PARTNER/EXECUTIVE OFFICER/MEMBER EXCLUDED? Y/N (Mandatory in NH) If yes, describe under DESCRIPTION OF OPERATIONS below	N/A	X	XYZ123456			X WC STATU-TORY LIMITS OTH-ER	
							E.L. EACH ACCIDENT	$ 1,000,000
							E.L. DISEASE - EA EMPLOYEE	$ 1,000,000
							E.L. DISEASE - POLICY LIMIT	$ 1,000,000
A	POLLUTION LIABILTY PROFESSIONAL LIABILITY			XYZ123456 XYZ123456				

DESCRIPTION OF OPERATIONS / LOCATIONS / VEHICLES (Attach ACORD 101, Additional Remarks Schedule, if more space is required)

RE: Transbay Transit Center Building

CERTIFICATE HOLDER

Webcor/Obayashi Joint Venture
951 Mariners Island Blvd., 7th Floor
San Mateo, CA 94404-2514

CANCELLATION

SHOULD ANY OF THE ABOVE DESCRIBED POLICIES BE CANCELLED BEFORE THE EXPIRATION DATE THEREOF, NOTICE WILL BE DELIVERED IN ACCORDANCE WITH THE POLICY PROVISIONS.

AUTHORIZED REPRESENTATIVE

Mary Jane Doe

WAIVER OF OUR RIGHT TO RECOVER FROM OTHERS ENDORSEMENT

This endorsement changes the policy to which it is attached effective on the inception date of the policy unless a different date is indicated below.

(The following "attaching clause" needs to be completed only when this endorsement is issued subsequent to preparation of the policy.)

This endorsement forms a part of Policy No. XYZ 1234567

Issued to: ABC SUBCONTRACTOR

By: XYZ INSURANCE COMPANY

Premium (if any) TBD

We have a right to recover our payments from anyone liable for an injury covered by this policy. We will not enforce our right against the person or organization named in the Schedule. (This agreement applies only to the extent that you perform work under a written contract that requires you to obtain this agreement from us).

You must maintain payroll records accurately segregating the remuneration of your employees while engaged in the work described in the Schedule.

The additional premium for this endorsement shall be 2-5% of the California workers compensation premium otherwise due on such remuneration.

Schedule

Person or Organization	Job Description
WEBCOR/OBAYASHI JOINT VENTURE, Its Officers, Directors and Employees AND TRANSBAY JOINT POWERS AUTHORITY, its Board Members and Commissions, All Authorized Agents and Representatives, and Members, Directors, Officers, Trustees, Agents and Employees of Any of Them.	TRANSBAY TRANSITY CENTER BUILDING.

WAIVER OF SUBRAGATION FOR WORKERS COMPENSATION INSURANCE TO BE INCLUDED.

Countersigned by John Doe
Authorized Representative

WC 04 03 06
(Ed. 4-84)

POLICY NUMBER: XYZ 1234567 COMMERCIAL GENERAL LIABILITY

THIS ENDORSEMENT CHANGES THE POLICY. PLEASE READ IT CAREFULLY.

ADDITIONAL INSURED – OWNERS, LESSEES OR CONTRACTORS (FORM B)

This endorsement modifies insurance provide under the following:

COMMERCIAL GENERAL LIABILITY COVERAGE PART

SCHEDULE

Name of Person or Organization: WEBCOR/OBAYASHI JOINT VENTURE, Its Officers, Directors and Employees

AND

TRANSBAY JOINT POWERS AUTHORITY, its Board Members and Commissions, All Authorized Agents and Representatives, and Members, Directors, Officers, Trustees, Agents and Employees of Any of Them.

RE: TRANSBAY TRANSIT CENTER BUILDING.

(If no entry appears above, information required to complete this endorsement will be shown in the Declarations as applicable to this endorsement.)

WHO IS AN INSURED (Section II) is amended to include as an insured the person or organization shown in the Schedule, but only with respect to liability arising out of "your work" for that Insured by or for you.

If required by your agreement with such insured, this insurance shall be primary insurance for such Insured. If anyone also provides similar insurance for such Insured, then that insurance will be primary, and this insurance will be excess over, or secondary to that insurance.

"The insurance afforded by this policy for the additional insured(s) is primary insurance and any other insurance maintained by or available to the additional Insured(s) is non-contributory."

WAIVER OF SUBROGATION - WORKERS COMP

CG 20 10 11 85

Exhibit "D"

Exhibit E – LEED Trade Subcontractor Submission Letter & Data Sheet

Transbay Transit Center
Webcor/Obayashi Joint Venture
175 Beale Street
San Francisco, CA 94105
T 415-978-5700

To Whom It May Concern:

In our efforts to complete LEED Documentation for the **Transbay Transit Center Project** we will need the following information provided on your official company letter head:

1. Company Name & Contact information
2. Contract Value
3. Scope of work included in Contract with specific Division and Sections listed
4. **List of all materials permanently installed on the project**, within the LEED boundary that were included in the contract. A total estimated weight value and total actual material cost must be provided for each material. Please provide exact Material name & manufacturer, division and specification section number (XX XX XX).
5. Recycled content (**post-consumer and Pre-consumer broken out separately**) percentages for each material from CSI Masterformat 2004 Edition Divisions 3-10, 31 (Section 31 6X XX Foundations) and 32 (Sections 32 1X XX Paving, 32 3X XX Site Improvements, 32 9X XX Planting). Please provide cut sheets of each material with the recycled content values posted.
6. List the location of material extraction (city, state, country) and material manufacturing (city, state, country) for all materials from CSI Masterformat 2004 Edition Divisions 3-10, 31 (Section 31 6X XX Foundations) and 32 (Sections 32 1X XX Paving, 32 3X XX Site Improvements, 32 9X XX Planting). Specifically, we are looking for those materials that were **both extracted and manufactured** within 500 miles of the jobsite. If you are sure that your materials do not comply as Regional Material, please note that the material was extracted/manufactured "greater than 500 miles" from the jobsite.
7. If you provided any adhesives, sealants, coatings, paints, carpet systems, etc. – please be sure to include these materials on your spreadsheet with the **actual VOC content (g/L**). Please provide proof in the form of a cutsheet, or MSDS highlighting the VOC content value.
    a. All particleboard, MDF, Agrifiber, Veneers, and composite wood products must be **Urea-Formaldehyde free**. Please note "*Urea-Formaldehyde free*" in the VOC column for these material types. All Agrifiber/composite wood products must provide proof of being Urea-formaldehyde free in the form of MSDS, Cut Sheet, or Letter from the Manufacturer.
8. For all materials that contain wood, please specific the FSC Wood **Chain of Custody number** (COC). The COC Certificate and **original purchasing invoices** must be provided as proof of purchase/certification.

<u>LEED Submittals:</u>

A. **Preliminary LEED Material Spreadsheet** - Within 30 days of Contract award, assemble and submit the "LEED Material Tracking Spreadsheet" complete with all data described in 4-8 above. Cover letter and back up documentation are not necessary for this submittal. The quantities, costs, products, and LEED metrics should be entered in the spreadsheet as the project/contract scope was bid/ estimated. Please see the sample LEED Material Tracking Spreadsheet that you must complete and submit back to Webcor/Obayashi Joint Venture within 30 days of awarded contract.
B. **Final Exhibit E submittal** – Prior to closeout, assemble and submit all 'actual' LEED material information on the "LEED Material Tracking Spreadsheets" and forms provided in the Project Manual, together with all supplemental documentation as required by LEED. Please see the sample LEED cover letter and Material Tracking Spreadsheet that you must complete and submit back to Webcor/Obayashi Joint Venture prior to closeout on the project.

If you have any questions or concerns, please contact Webcor/Obayashi Joint Venture. If there is any information that you are not able to track down please let us know. We are here to support your LEED efforts.

Sincerely,
WEBCOR/OBAYASHI JOINT VENTURE

[Insert your company logo]
[Type the sender address]
Phone: **[Type the sender phone number]**

Document Control
Transbay Transit Center
Webcor/Obayashi Joint Venture
175 Beale Street
San Francisco, CA 94105
docctrl@webcor-obayashi.com

[**Date**]

To: Webcor/Obayashi Joint Venture,

Please find the following information regarding the scope of work that [subcontractor name] provided to the **Transbay Transit Center project** in San Francisco, CA.

1. Subcontractor's LEED Point of contact information:
    a. Name: _____
    Title: _____
    Email: _____
    Phone #: _____
2. The total contract value of our work is $_____
3. Scope of work (Division/Section): [use LEED Material Spreadsheet]
4. List of Materials included in contract value (weight): [use LEED Material Spreadsheet]
5. Post-Consumer & Post-Industrial Recycled content values for each material (%):[use LEED Material Spreadsheet]
6. Location of Material Extraction & location of Material Manufacturing: [use LEED Material Spreadsheet]
7. VOC Content (g/L) for each material: [use LEED Material Spreadsheet]
    a. VOC values only required for: adhesives, sealants, coatings, paints, carpet & flooring systems
    b. Confirmation of "Urea-Formaldehyde Free" for Agrifiber products: [use LEED Material Spreadsheet]
8. Chain of Custody Number for all FSC Wood Products: [use LEED Material Spreadsheet]

Thank you,

_____

[Insert your company logo]
[Sender Name]
[Sender Title]
[Sender Company Name]
[Date signed]

TTC - LEED Materials Spreadsheet

Trade Group No.: _____

Subcontractor Name: _____

Total Contract Value: _____

Official Product Name	Material Manufacturer	Division and Section # (XX XX XX)	Actual Cost of Material	Total Weight of Material Purchased	Post Consumer Recycled Content %	Pre Consumer Recycled Content %	Location of Material Extraction	Location of Material Manufacturing	VOC Content (g/L) (if applicable)	FSC Chain of Custody # (if applicable)

EXHIBIT F - BIM Breakdown Sheet

Trade Contractor Name: ______________________

(a)	(b)	(c)	(d)	(e)	(f)	(g)	(h)	(i)	(j)	(k)	(l)	(m)	(n)	(o)	(p)	(q)	(r)	(s)
Building Element		**Activity**		**Quantity**	**Unit**	**Material**		**Labor**										
UniFormat Classification		MasterFormat Code	Name			Material Cost	Waste Factor	Specific Labor Rate, $/HR includes misc small tools				Crew Composition, Qty				Blended Crew Hourly Unit Rate	Labor Consumption Rate Hours / Unit	Waste Factor
						$/unit	%	Labor Type #1	Labor Type #2	Labor Type #3	Etc.	Labor Type #1	Labor Type #2	Labor Type #3	Etc.	Total Crew Cost Per Hour / No. of Men on Crew	Labor Hours / Unit = 1/productivity	%
UniFormat coding organizes data logically by system and assemblies (Example: A2010.10)	Concise Name of Building Element.	MasterFormat coding organizes info by construction activity (Example: 31.53.13)	The individual tasks that can be performed by the installing trade contractor without interruption from other trades. Listed activities should coincide with activies included with a subcontractor's detailed project schedule.	Defining measurable unit and associated quantity for each work activity		Cost per unit of material	Excess material required to complete work	Labor rate for each labor type required for the activity. (Add coumns as necessary)				Define quantity for each labor type for each activity. (Add columns as necessary)				Cost averaged hourly rate per person on crew	Consumption is the inverse of Labor Productivity Rate (productivity = units / hour). Units need to match column "f" units.	Consumption rate adjustment for specific working
UniFormat Classification from Bid Form - xxxx.xx	Item Description/ Element Name on Bid Form	xx.xx.xx xx.xx.xx xx.xx.xx	Work Activity 1 Work Activity 2 Etc.													#DIV/0! #DIV/0! #DIV/0!		
UniFormat Classification from Bid Form - xxxx.xx	Item Description/ Element Name on Bid Form	xx.xx.xx xx.xx.xx xx.xx.xx	Work Activity 1 Work Activity 2 Etc.													#DIV/0! #DIV/0! #DIV/0!		
UniFormat Classification from Bid Form - xxxx.xx	Item Description/ Element Name on Bid Form	xx.xx.xx xx.xx.xx xx.xx.xx	Work Activity 1 Work Activity 2 Etc.													#DIV/0! #DIV/0! #DIV/0!		
UniFormat Classification from Bid Form - xxxx.xx	Item Description/ Element Name on Bid Form	xx.xx.xx xx.xx.xx xx.xx.xx	Work Activity 1 Work Activity 2 Etc.													#DIV/0! #DIV/0! #DIV/0!		
UniFormat Classification from Bid Form - xxxx.xx	Item Description/ Element Name on Bid Form	xx.xx.xx xx.xx.xx xx.xx.xx	Work Activity 1 Work Activity 2 Etc.													#DIV/0! #DIV/0! #DIV/0!		
UniFormat Classification from Bid Form - xxxx.xx	Item Description/ Element Name on Bid Form	xx.xx.xx xx.xx.xx xx.xx.xx	Work Activity 1 Work Activity 2 Etc.													#DIV/0! #DIV/0! #DIV/0!		
UniFormat Classification from Bid Form - xxxx.xx	Item Description/ Element Name on Bid Form	xx.xx.xx xx.xx.xx xx.xx.xx	Work Activity 1 Work Activity 2 Etc.													#DIV/0! #DIV/0! #DIV/0!		
UniFormat Classification from Bid Form - xxxx.xx	Item Description/ Element Name on Bid Form	xx.xx.xx xx.xx.xx xx.xx.xx	Work Activity 1 Work Activity 2 Etc.													#DIV/0! #DIV/0! #DIV/0!		
UniFormat Classification from Bid Form - xxxx.xx	Item Description/ Element Name on Bid Form	xx.xx.xx xx.xx.xx xx.xx.xx	Work Activity 1 Work Activity 2 Etc.													#DIV/0! #DIV/0! #DIV/0!		
UniFormat Classification from Bid Form - xxxx.xx	Item Description/ Element Name on Bid Form	xx.xx.xx xx.xx.xx xx.xx.xx	Work Activity 1 Work Activity 2 Etc.													#DIV/0! #DIV/0! #DIV/0!		
UniFormat Classification from Bid Form - xxxx.xx	Item Description/ Element Name on Bid Form	xx.xx.xx xx.xx.xx xx.xx.xx	Work Activity 1 Work Activity 2 Etc.													#DIV/0! #DIV/0! #DIV/0!		
UniFormat Classification from Bid Form - xxxx.xx	Item Description/ Element Name on Bid Form	xx.xx.xx xx.xx.xx xx.xx.xx	Work Activity 1 Work Activity 2 Etc.													#DIV/0! #DIV/0! #DIV/0!		
UniFormat Classification from Bid Form - xxxx.xx	Item Description/ Element Name on Bid Form	xx.xx.xx xx.xx.xx xx.xx.xx	Work Activity 1 Work Activity 2 Etc.													#DIV/0! #DIV/0! #DIV/0!		

EXHIBIT F - BIM Breakdown Sheet

Trade Contractor Name: ______________________

(a)	(b)	(c)	(d)	(t)	(u)	(v)	(w)	(x)	(y)	(z)	(aa)	(bb)	(cc)	(dd)	(ee)	(ff)	(gg)	(hh)	(ii)	(jj)
Building Element		**Activity**		**Equipment**							**Subtotals**									**Total**
UniFormat Classification		MasterFormat Code	Name	Equipment Rate, $/HR Unit Price / Hour			Equipment Consumption Rate Hours / Unit			Waste Factor	Material $	OH&P %	Total Material $	Labor $	OH&P %	Total Labor $	Equip $	OH&P %	Total Equip $	$
				Equipment Type 1	Equipment Type 2	Etc.	Equipment Type 1	Equipment Type 2	Etc.	%	(e) * (g) * (h)		(aa) * [1 + (bb)]	(e) * (r) * (q) * [1 + (s)]		(dd) * [1 + (ee)]	(e) * (t) * (w) * [1 + (z)]		(gg) * [1 + (hh)]	(cc) + (ff) + (ii)
UniFormat coding organizes data logically by system and assemblies (Example: A2010.10)	Concise Name of Building Element.	MasterFormat coding organizes info by construction activity (Example: 31.53.13)	The individual tasks that can be performed by the installing trade contractor without interruption from other trades. Listed activities should coincide with activies included with a subcontractor's detailed project schedule.	Define the type(s) of equipment for each work activity			Consumption is the inverse of Equipment Productivity Rate (productivity = units / hour). Units need to match column "f" units.			Consumption rate adjustment for specific working conditions							Fomula is per piece of equipment			
UniFormat Classification from Bid Form - xxxx.xx	Item Description/ Element Name on Bid Form	xx.xx.xx xx.xx.xx xx.xx.xx	Work Activity 1 Work Activity 2 Etc.								$ - $ - $ -		$ - $ - $ -	#DIV/0! #DIV/0! #DIV/0!		$ - $ - $ -	$ - $ - $ -		$ - $ - $ -	**#DIV/0!** **#DIV/0!** **#DIV/0!**
UniFormat Classification from Bid Form - xxxx.xx	Item Description/ Element Name on Bid Form	xx.xx.xx xx.xx.xx xx.xx.xx	Work Activity 1 Work Activity 2 Etc.								$ - $ - $ -		$ - $ - $ -	#DIV/0! #DIV/0! #DIV/0!		$ - $ - $ -	$ - $ - $ -		$ - $ - $ -	**#DIV/0!** **#DIV/0!** **#DIV/0!**
UniFormat Classification from Bid Form - xxxx.xx	Item Description/ Element Name on Bid Form	xx.xx.xx xx.xx.xx xx.xx.xx	Work Activity 1 Work Activity 2 Etc.								$ - $ - $ -		$ - $ - $ -	#DIV/0! #DIV/0! #DIV/0!		$ - $ - $ -	$ - $ - $ -		$ - $ - $ -	**#DIV/0!** **#DIV/0!** **#DIV/0!**
UniFormat Classification from Bid Form - xxxx.xx	Item Description/ Element Name on Bid Form	xx.xx.xx xx.xx.xx xx.xx.xx	Work Activity 1 Work Activity 2 Etc.								$ - $ - $ -		$ - $ - $ -	#DIV/0! #DIV/0! #DIV/0!		$ - $ - $ -	$ - $ - $ -		$ - $ - $ -	**#DIV/0!** **#DIV/0!** **#DIV/0!**
UniFormat Classification from Bid Form - xxxx.xx	Item Description/ Element Name on Bid Form	xx.xx.xx xx.xx.xx xx.xx.xx	Work Activity 1 Work Activity 2 Etc.								$ - $ - $ -		$ - $ - $ -	#DIV/0! #DIV/0! #DIV/0!		$ - $ - $ -	$ - $ - $ -		$ - $ - $ -	**#DIV/0!** **#DIV/0!** **#DIV/0!**
UniFormat Classification from Bid Form - xxxx.xx	Item Description/ Element Name on Bid Form	xx.xx.xx xx.xx.xx xx.xx.xx	Work Activity 1 Work Activity 2 Etc.								$ - $ - $ -		$ - $ - $ -	#DIV/0! #DIV/0! #DIV/0!		$ - $ - $ -	$ - $ - $ -		$ - $ - $ -	**#DIV/0!** **#DIV/0!** **#DIV/0!**
UniFormat Classification from Bid Form - xxxx.xx	Item Description/ Element Name on Bid Form	xx.xx.xx xx.xx.xx xx.xx.xx	Work Activity 1 Work Activity 2 Etc.								$ - $ - $ -		$ - $ - $ -	#DIV/0! #DIV/0! #DIV/0!		$ - $ - $ -	$ - $ - $ -		$ - $ - $ -	**#DIV/0!** **#DIV/0!** **#DIV/0!**
UniFormat Classification from Bid Form - xxxx.xx	Item Description/ Element Name on Bid Form	xx.xx.xx xx.xx.xx xx.xx.xx	Work Activity 1 Work Activity 2 Etc.								$ - $ - $ -		$ - $ - $ -	#DIV/0! #DIV/0! #DIV/0!		$ - $ - $ -	$ - $ - $ -		$ - $ - $ -	**#DIV/0!** **#DIV/0!** **#DIV/0!**
UniFormat Classification from Bid Form - xxxx.xx	Item Description/ Element Name on Bid Form	xx.xx.xx xx.xx.xx xx.xx.xx	Work Activity 1 Work Activity 2 Etc.								$ - $ - $ -		$ - $ - $ -	#DIV/0! #DIV/0! #DIV/0!		$ - $ - $ -	$ - $ - $ -		$ - $ - $ -	**#DIV/0!** **#DIV/0!** **#DIV/0!**
UniFormat Classification from Bid Form - xxxx.xx	Item Description/ Element Name on Bid Form	xx.xx.xx xx.xx.xx xx.xx.xx	Work Activity 1 Work Activity 2 Etc.								$ - $ - $ -		$ - $ - $ -	#DIV/0! #DIV/0! #DIV/0!		$ - $ - $ -	$ - $ - $ -		$ - $ - $ -	**#DIV/0!** **#DIV/0!** **#DIV/0!**
UniFormat Classification from Bid Form - xxxx.xx	Item Description/ Element Name on Bid Form	xx.xx.xx xx.xx.xx xx.xx.xx	Work Activity 1 Work Activity 2 Etc.								$ - $ - $ -		$ - $ - $ -	#DIV/0! #DIV/0! #DIV/0!		$ - $ - $ -	$ - $ - $ -		$ - $ - $ -	**#DIV/0!** **#DIV/0!** **#DIV/0!**
UniFormat Classification from Bid Form - xxxx.xx	Item Description/ Element Name on Bid Form	xx.xx.xx xx.xx.xx xx.xx.xx	Work Activity 1 Work Activity 2 Etc.								$ - $ - $ -		$ - $ - $ -	#DIV/0! #DIV/0! #DIV/0!		$ - $ - $ -	$ - $ - $ -		$ - $ - $ -	**#DIV/0!** **#DIV/0!** **#DIV/0!**
UniFormat Classification from Bid Form - xxxx.xx	Item Description/ Element Name on Bid Form	xx.xx.xx xx.xx.xx xx.xx.xx	Work Activity 1 Work Activity 2 Etc.								$ - $ - $ -		$ - $ - $ -	#DIV/0! #DIV/0! #DIV/0!		$ - $ - $ -	$ - $ - $ -		$ - $ - $ -	**#DIV/0!** **#DIV/0!** **#DIV/0!**
											Total Costs		**$ -**			**$ -**			**$ -**	**#DIV/0!**

Exhibit G

SUBCONTRACTOR PAYMENT REQUISITION

1. Forms Checklist

2. Forms

	Form Number	Form Title
i.	1030	Subcontractor Progress Billing Invoice
ii.	1030A	Schedule of Values
iii.	1031	Subcontractor Final Retention Invoice
iv.	1031A	Schedule of Value Retention Release
v.	00 08 21/AT3-E (modified)	Progress Payment Report (With Additional SBE Columns)

Forms Checklist

**This checklist is provided as a reference, but may not be a complete list. Refer to the Contract Documents for all required submissions and their frequency.

#	FORMS	FORM	FREQ	REF
1	**CityBuild Workforce Projection Form 1 and 2** - Non-compliance results in removal from site	00 08 20/AT1 00 08 20/AT2	Initial	Div 00 08 20 1.7
2	**Schedule of Values**	1030A	Initial / Monthly	Exhibit G
3	**Daily Report** (must be CURRENT at the time of pay app submission and payment)		Daily / Monthly	Bid Manual IV. A. 4. c.
4	**Subcontract Progress Billing Invoice**	1030	Monthly	Exhibit G
5	**Conditional Waiver and Release Upon Progress Payment**	1034	Monthly	Exhibit C
6	**Unconditional Waiver and Release Upon Progress Payment**	1035	Monthly	Exhibit C
7	**TJPA ARRA Jobs Report Form**	v 1.2	Monthly	Div 00 08 13, 1.2.E & APF
8	**Manpower Projection**		Monthly	Bid Manual IV. A. 38. a.
9	**Billing Projection** / Cashflow Projection		Monthly	Bid Manual IV. A. 37. a.
10	**TJPA Progress Payment Report**	00 08 21/AT3-D	Monthly	Div 00 08 21, 1.5.B
11	**Subcontractor Payment Declaration**	00 08 21/AT3-E	Monthly	Div 00 08 21, 1.5.C
12	**Project Specific Insurance** (Must be CURRENT)		Monthly	Long Form Subcontract 16
13	**Certified Payroll**, weekly electronic submission (CURRENT at the time of pay app submission and payment) including subtiers		Weekly / Monthly	Long Form Subcontract 4.2
14	**Apprentice Training Fund Contributions** proof of payment	a) Copy of trust fund remittance report w/ copy of cancelled check OR b) DAS Form CAC 2 w/ copy of cancelled check	Monthly	Bid Manual II. F. 6. c. & Long Form Subcontract 4.2 & Div 00 08 22 1.2 D.
15	**Apprenticeship min/max ratio verification -** if under, submit a plan to satisfy requirement by the end of the project without exceeding daily max; if over, provide written explanation for each day of violation		Monthly	Bid Manual
16	**Apprenticeship Monthly Trade Subcontractor Affidavit**		Monthly	Bid Manual, Exhibit Q
17	**Request for Dispatch of an Apprentice (DAS 142 Form)** - if any	DAS 142	Monthly	Bid Manual
18	**Apprentice documentation** - documentation on employed apprentices that are current and properly registered as required by specs		Monthly	Div 00 08 13/APA, Section 23 (d) (1)
19	**EIC Form** from eligible subcontractor employees		Yearly	Div 00 08 22 1.9 C (all of 1.9)
20	**LEED - NC Version 3.0** (monthly summaries and deliverables)		Monthly	Bid Manual IV. A. 40. a. and Div 01 81 13 1.5 D.1-4
21	Reconciled Excel submittal form with Trade Package Progress Schedule (2 times a month) - NOTE: In Div 01 our updated schedule must be submitted in our Progress Payment Request, see 01 13 10 1.5 E.		Monthly	Bid Manual IV. A. 35. f. and C.1.J
22	**Weekly Safety "Tool Box" Meeting Minutes** (must be CURRENT at the time of pay app submission and payment)		Weekly / Monthly	Bid Manual IV. B.
23	**JHA Reports** (Job Hazard Analysis Reports) (must be CURRENT at the time of pay app submission and payment)	H4	Monthly	Bid Manual IV. B.
24	**Monthly Disposal and Recycling Summary Report** (Waste Management Requirements)	00 08 15 / APA - 1 and 00 08 15 / APA - 12	Monthly	Div 00 08 15 1.5 C 1 and 2
25	(Contractor) **CONSTRUCTION AND DEMO DEBRIS RECOVERY MONTHLY SUMMARY REPORT** monthly with Pay App		Monthly	Div 01 74 00 1.8 A. B.
26	**DBE Trucking Verification**, due at end of month, need amount paid by DBE Trucking companies to all firms, including owner-operators, for leasing of trucks - DUE TO TJPA by Contractor on the 15th of the month to TJPA	Monthly DBE Trucking Verification Form	Monthly	Div 00 08 21/AT2 5 b. i. and ii.
27	**Up to date As-builts drawings** on site at all times		Monthly	Bid Manual IV. K. 1. a.
28	**Stored Materials Documentation**		Monthly	Div 00 07 00, 1.4.I
29	**Daily Sign In and Out Sheet** (must be CURRENT at the time of pay app submission and payment)	TJPA Daily Sign-in Sheet	Daily / Monthly	Div 00 07 00 57, Article 11, 11.04
30	**Daily Quality Control Reports** (must be CURRENT at time of pay app submission and payment)		Daily	Dic 00 14 00 1.12 and Exhibit J
31	**Trade Package Progress Schedule** update in electronic format (must be CURRENT at the time of pay app submission and payment)		Monthly	
32	**LEED Progress Reporting** with each pay app		Monthly	
33	**Updated Bidders / Proposers Information Request Form** - must be submitted whenever subcontractor information is updated, regardless of SBE participation	00 08 21/AT3-B	As-needed	Div 00 08 21 1.3E
34	**Conditional Waiver and Release Upon Progress Payment** - subtiers and vendors	1034	Final	Exhibit C
35	**Unconditional Waiver and Release Upon Progress Payment** - subtiers and vendors	1035	Final	Exhibit C
36	**Subcontractor Final Retention Invoice**	1031	Final	Exhibit G
37	**Schedule of Values Retention Release**	1031A	Final	Exhibit G
38	**Conditional Waiver and Release Upon Final Payment**	1036	Final	Exhibit C
39	**Unconditional Waiver and Release Upon Final Payment**	1037	Final	Exhibit C
40	**Conditional Waiver and Release Upon Final Payment** - subtiers and vendors	1036	Final	Exhibit C
41	**Unconditional Waiver and Release Upon Final Payment** - subtiers and vendors	1037	Final	Exhibit C
42	**Final** weekly electronic submission of **Certified Payroll** (must be CURRENT at the time of pay app submission and payment) including subtiers		Final	Long Form Subcontract 4.2
43	One compact disk containing electronic files in .dwg format and pdf format and three (3) sets of accurate and complete As-built drawings - Complete As-builts are due upon completion. - prior to requesting final payment		Final	Bid Manual IV. K. 1. e and f.
44	**Operations and Maintenance Manuals** shall be submitted 12 months prior to start of commissioning and prior to requesting final payment		Final	Bid Manual IV. K. 1. f.
45	Evidence of final payment to Unions and Union Trust Funds, State Apprenticeship Programs (subs who are not signatory to unions)		Final	Long Form Subcontract 4.2

Forms Checklist

**This checklist is provided as a reference, but may not be a complete list. Refer to the Contract Documents for all required submissions and their frequency.

#	FORMS	FORM	FREQ	REF
46	**Apprenticeship Trade Subcontractor Affidavit** - that the required number of apprentices were employed and/or records showing that the apprenticeship committee(s) either denied or failed to respond to a request for the dispatch of apprentices in accordance with Labor Code Section 1777.5		Final	Bid Manual, Exhibit Q
47	**Warranties** must be submitted prior to requesting final payment		Final	Div 01 17 00 1.4 A 3. b.
48	Spare Parts and material extra stock		Final	Div 01 17 00 1.4 A 3. d.
49	**Final (Contractor) CONSTRUCTION AND DEMO DEBRIS RECOVERY SUMMARY REPORT**		Final	Div 01 74 00 1.8 D.
50	**Final LEED Final Reports and Documentation**		Final	Bid Manual IV. A. 40. a. and Div 01 81 13 1.5 D.1-4
51	**Final Disposal and Recycling Summary Report** (Waste Management Requirements)	00 08 15 / APA - 1 and 00 08 15 / APA - 12	Final	Div 00 08 15 1.5 C 1 and 2

Subcontractor Progress Billing Invoice

Send invoice to:
EMAIL: ap@webcor.com
FAX: (510) 748-3474
MAIL: 1751 Harbor Bay Parkway, Suite 200 Alameda, CA 94502

Billing Information		***Subcontractor Contact Information***	
Owner Pay App NO.		Subcontractor Name:	
Vendor Number		Remittance Address:	
Webcor/Obayashi Joint Venture Subcontract Number:		City, State, Zip:	
Webcor/Obayashi Joint Venture Job Number:	30100.XX	Contact Name:	
Job Name:	Transbay Transit Center	Contact Email Address:	
Pay App Number:		Contact Phone Number:	
Invoice Number:		Contact Fax Number	
Invoice Date:		Print Signer's Name and Title:	
Sub Job Number:			
Period From:		**Signature**	
Period To:		**Date Signed**	

The following invoice covers work completed through the last day of

Original Contract Amount:		$0.00
Executed Change Orders (CO) though CO No:		$0.00
Total Revised Contract Amount:		$0.00
Gross Amount Complete to Date %		$0.00
Less Gross Amount Previously Invoiced:		$0.00
Current Gross Billing Amount:		$0.00
Less Current Retention:		$0.00
Current Net Amount:		$0.00

Webcor/Obayashi Joint Venture Approvals below this line

Schedule of Values

Sub:
Sub No.:

Transbay Transit Center

Sub Application Number:
Invoice Date:
Webcor/Obayashi Joint Venture Job No: 30100.XX

In tabulations below, amounts are stated to nearest dollar

Period From:
Period To:

A			B	C	D	E	F	G	H	I	J
Item No.	CSI Division	Spec Section	Description of Work	Scheduled Value	Previous Application	Work Completed This Application		Total To Date (C+D+E)	% (F/B)	Balance To Finish (B-F)	Retention To Date
						In Place	Stored				
1											
2											
3											
4											
5											
6											
7											
8											
			Sub Total								
PCO #	CSI Division	SCO No.	Approved Change Orders								
			Total Change Orders								
			Grand Total								

Subcontractor Final Retention Invoice

Send invoice to:
EMAIL: ap@webcor.com
FAX: (510) 748-3474
MAIL: 1751 Harbor Bay Parkway, Suite 200 Alameda, CA 94502

Billing Information		***Subcontractor Contact Information***	
Vendor Number (W/O JV Use Only)		Subcontractor Name:	
Invoice Number:	RETENTION:	Remittance Address:	
Invoice Date:		City, State, Zip:	
Webcor/Obayashi JV Subcontract Number:		Contact Name:	
Webcor/Obayashi JV Job Number:	30100.XX	Contact Email Address:	
Job Name:		Contact Phone Number:	
Transbay Transit Center		Contact Fax Number	
		Print Signer's Name and Title:	
		Signature & Date	Date Signed

The following invoice covers work completed through the last date of _____ (Month), _____ (Year):

Contract Amount:		$ -
Executed Change Orders Through Change Order NO:	_____	$ -
Total Revised Contract Amount:		$ -
Gross Amount Complete to Date % (_____ %)		$ -
Less: Total Net Amount Previously Billed:		$ -
Total Amount Due:		$ -

********** ** ********** *** **********

For Webcor /Obayashi JV Use only

Schedule of Values Retention Release

Sub:
Sub No.:

Transbay Transit Center

Sub Application Number:
Invoice Date:
Webcor/Obayashi Joint Venture Job No: 30100.XX

In tabulations below, amounts are stated to nearest dollar

Period From:
Period To:

A			B	C	D	E	F	G	H	I	J
Item No.	CSI Division	Spec Section	Description of Work	Scheduled Value	Previous Application	Work Completed This Application		Total To Date (C+D+E)	% (F/B)	Balance To Finish (B-F)	Retention To Date
						In Place	Stored				
1											
2											
3											
4											
5											
6											
7											
8											
			Sub Total								
PCO #	CSI Division	SCO No.	Approved Change Orders								
			Total Change Orders								
			Grand Total								

TRANSBAY JOINT POWERS AUTHORITY
PROGRESS PAYMENT REPORT
(WITH ADDITIONAL SBE COLUMNS)

To be completed by Trade Subcontractor and submitted to Project Manager with every monthly invoice.

PART 1: PROJECT SUMMARY

Contract Award Date:	TJPA Contract No.:	Contract Title:	
Trade Subcontractor:	Contact Person:	Contact Phone No.:	Contact Email:
Trade Subcontractor Address	Signature:		
Invoice Date:	Invoice No.:	For the Period:	

1. Award amount of Trade Subcontract	$ -
2. Amount of Change Orders, Amendments and Modifications to Date	$ -
3. Total Contract Amount to Date including Change Orders, Amendments and Modifications (Line 1 + Line 2)	$ -
4. Total Amount for this Invoice (Less Retention)	$ -
5. Total Previously Invoiced Awaiting Payment (Less Retention)	$ -
6. Total Amount Paid to Date (not including Lines 4 and 5)	$ -
7. Total Invoice Amount Requested to Date (Line 4 + Line 5 + Line 6)	$ -
8. Total Retention to Date[1]	$ -
9. Percent Complete ([Line 7 + Line 8] / Line 3)	0%

TRANSBAY JOINT POWERS AUTHORITY
PROGRESS PAYMENT REPORT
(WITH ADDITIONAL SBE COLUMNS)

PART 2: CONSULTANT/SUBCONSULTANT PAYMENT DETAIL SUMMARY

A	B	C	D	E	F	G	H	I	J	K	L	M	N	O	P	Q	R
Name of Firm (Including Prime, Subs, Vendors, and Joint Ventures)[4]	**DBE or SBE (Y/N)**	**Portion of Work (%)**	**Contract Amount ($)**	**Amount of Change Orders to Date ($)**	**Total = Contract Amount + Change Orders (D+E) ($)**	**Amount Invoiced This Period ($)**	**Previously Invoiced Awaiting Payment ($)**	**Total Amount Paid to Date ($)**	**Total Retention to Date[1] ($)**	**Percent Complete to Date ([G+H+I +J] / F) (%)**	**SBE Participation Type[2]**	**SBE Participation Percentage[3] (%)**	**SBE Participation Lump Sum[3] ($)**	**SBE Total Contract Amount[3] FxM+N ($)**	**Percent SBE Contract Amount (O/F) (%)**	**SBE Amount Paid to Date ($)**	**Percent SBE Paid to Date (Q/I) (%)**
					$0.00					#DIV/0!				$0.00	#DIV/0!		#DIV/0!
					$0.00					#DIV/0!				$0.00	#DIV/0!		#DIV/0!
					$0.00					#DIV/0!				$0.00	#DIV/0!		#DIV/0!
					$0.00					#DIV/0!				$0.00	#DIV/0!		#DIV/0!
					$0.00					#DIV/0!				$0.00	#DIV/0!		#DIV/0!
					$0.00					#DIV/0!				$0.00	#DIV/0!		#DIV/0!
					$0.00					#DIV/0!				$0.00	#DIV/0!		#DIV/0!
					$0.00					#DIV/0!				$0.00	#DIV/0!		#DIV/0!
					$0.00					#DIV/0!				$0.00	#DIV/0!		#DIV/0!
					$0.00					#DIV/0!				$0.00	#DIV/0!		#DIV/0!
					$0.00					#DIV/0!				$0.00	#DIV/0!		#DIV/0!
TOTAL		0	0	0	0	0	0	0	0	#DIV/0!	0	0	0	0	#DIV/0!	0	#DIV/0!

[1] As retention is requested and paid, move out of "Total Retention to Date" and into "Amount Paid to Date"

[2] SBE Participation Types: (Select 1 Only) SBE Prime Contractor, SBE Subcontractor, SBE Joint Venture Partner, SBE Regular Dealer,Other SBEs, SBE Trucking Company (refer to TJPA Board Policy No. 015 Section IV)

[3] If SBE participation is Other SBE, SBE Joint Venture Partner or SBE Trucking Company enter lump sum participation in column N in lieu of column M (Refer to TJPA Policy No. 015 Section IV)

[4] If SBE Firm has multiple participation types each type should be listed as separate line item

TRANSBAY TRANSIT CENTER

Site Specific Safety Program
B… Revision **6**

August 22, 2012 ***…B***

WEBCOR/OBAYASHI JOINT VENTURE
SAN FRANCISCO, CA

EXHIBIT H

Contents

WEBCOR/OBAYASHI JOINT VENTURE STATEMENT ON SAFETY

It is the policy of Webcor/Obayashi Joint Venture to provide employees a safe place to work. The personal safety and health of each employee of this company is of prime importance. The prevention of accidents and injury will be given precedence over operating productivity whenever necessary. To the greatest degree possible, management will provide facilities required for personal safety and health.

Our objective is a program that will reduce the number of injuries to a minimum and to surpass the best experience of other operations similar to ours. Our goal is zero accidents and injuries.

Our policy will be implemented as follows:

- Management will continue to develop policies and procedures that will assist in the control of personal injury, property losses, and fleet damage. Direct and indirect costs associated with these types of losses contribute unfavorably to operating expenses. These policies and procedures will be reviewed and updated as needed.

- Safety is the direct responsibility of all personnel. Safety is of prime importance to production and quality.

- Safety on the job in all company facilities and job sites is a priority. In no instance will safety become secondary to any other considerations. Any recognized safety activity or hazard will be corrected.

- It is mandatory that all personnel engaged in work on this project comply with all Federal, State and Local safety codes and regulations throughout the duration of their construction on this project.
- Each site will have a supervisor available to support the safety effort.

- Each supervisor and employee will be assigned various levels of safety responsibility and authority. All employees will be held accountable for the safety policy.

- An established system of communication, measurement, and documentation exists throughout the company.

A Safety Committee is in place to formulate and update the company safety program and policies. This committee operates under the supervision of management.

HEALTH AND SAFETY COMMUNICATIONS

Orientation
This training will contain required elements stipulated by Webcor/Obayashi Joint Venture code of safe work practices.

The Webcor/Obayashi Joint Venture site-specific safety orientation will be approximately one half (1/2) hour to 45 minutes in duration. The orientation includes a discussion on site protocol, evacuation procedures and a description of the logistics of the site. Subcontractors are required to provide other task specific orientations as needed.

Click Safety Program
Project: Transbay Transit Center
Notification of Online Contractor Safety Training Initiative

Webcor/Obayashi Joint Venture and ClickSafety have partnered to create a web-based Contractor Safety orientation course for the Transbay Transit Center. All contractors requiring access to the Transbay Transit Center project must complete the Safety Passport orientation-training course online through ClickSafety. This course addresses site-specific safety expectations/requirements that you and your employees are expected to understand and comply with while working on the premises.

Project Requirements
ClickSafety is the leading provider of web-based safety and risk management systems for the Construction Industry. ClickSafety will be providing the online training and tracking system used to deliver safety orientation. You will be required to have **ALL** your employees successfully complete the online **Safety Passport Orientation**, **Transbay project specific training** and the **Click Green Construction Practices** through the ClickSafety system prior to their arrival onsite. The average employee should take **30 minutes** to complete the Safety Passport and 15 minutes for Transbay project specific training and 10 minutes to complete Click Green Construction Practices. The course will be available in both English and Spanish.

Project Fees
The fee structure for ClickSafety services is a ……***$100 annual fee per user.**
*Prorate will apply to those that begin the training after Q1 of the current year.

The prorate schedule is as follows:

January 1 – March 31	*$100*	*Valid January - December 2012*
April 1 – June 30	*$75*	*Valid April 1 – December 2012*
July 1 – September 30	*$50*	*Valid July 1 – December 2012*
October 1 – December 31	*$25*	*Valid October 1 – December 2012*

ClickSafety Account Setup, User Registration and Implementation
Step 1: Go to the project page – http://www.clicksafety.com/safetypassport-transbay
Step 2: Create a company account. **If you already have an account with ClickSafety, you will still need to register your existing account for this project.** Click on the 'Company' tab above the 'User' Step 1 on the home page, and then click on '**Register Company'.**
Step 3**:** Assign Safety Passport Core Orientation (annual training) along with site specific training.

Step 4: Prepay for employee training with a credit card and create an access code.
Step 5: Direct all employees to the project page to self-register with your access code and complete training prior to arrival at the jobsite.

For general information about this project or registration assistance, please contact:
ClickSafety Support at (925) 855-SAFE (7233) ext. 629 - cshelp@clicksafety.com

A ClickSafety representative is available to answer any of your questions about this program. The ClickSafety program administrator is: Christina Parkin, Account Manager, (925) 208-2618, Email: cparkin@clicksafety.com.

Should you have specific questions regarding the project or safety requirements, you may contact:

B… ~~**Lindsay Miller**~~ **Danielle DiRicco**
Safety Engineer
Webcor/Obayashi Joint Venture
T ~~510-476-2589 C 650-288-8034~~ **(510) 748-1978**
~~*Lindsay@webcor.com*~~ **ddiricco@webcor.com** ***…B***

We appreciate your attention in this matter and look forward to a continuing and successful business relationship.

Disclaimer
ClickSafety and Webcor/Obayashi Joint Venture make this training material available with the understanding that users exercise their own skill and care with respect to its use. It is the duty of each employer as specified in the Occupational Safety and Health Act of 1970 (P.L. 91-596) to furnish to each of his employees employment and a place of employment which is free from recognized hazards that are causing or likely to cause death or serious physical harm to his employees and must comply with the applicable occupational safety and health standards adopted for his / her type of work. In addition, each employee must comply with occupational safety and health standards and all rules, regulations, and orders which are applicable to his or her own actions and conduct.

Project Supervisory Requirements
All supervisory personnel shall have as a minimum the OSHA 30 Hour Construction Safety training within the prior four years and possess a current CPR /First Aid and AED certification. In addition supervisory personnel shall have at a minimum 5 years' experience as a superintendent in a similar type of project.

Project Safety Staffing Requirements
B… ~~Every trade subcontractor shall employ full time Site Safety Representative (SSR) to coordinate project safety requirements. The SSR shall have at a minimum all the following qualifications:~~
~~The SSR must hold a current CHST certification and shall have attended the OSHA Standards for the Construction Industry (OSHA 510) training program.~~
~~The SSR shall have 3 years prior experience working in a like project or condition, and possess a current CPR /First Aid and AED certification.~~
~~A full time SSR is required up to 50 employees including tiered subcontractors, office and field staff/supervision. For each additional 50 employees, another SSR shall be required including tiered subcontractors. (I.e. at 151 employees there will be 3 SSR's and so on.) This applies to all shift work and~~

~~off hour or weekend work. The SSR shall have no other duties than full time safety. The Site Safety Representative (SSR) are subject to Webcor/Obayashi Joint Venture's approval and may be removed at any time with or without cause and replacement personnel provided at the subcontractor's/employer's expense.~~

~~Every trade subcontractor shall employ full time Designated Safety Representative (DSR). The DSR shall have at a minimum all the following qualifications:~~

~~The DSR must hold a current OSHA 30 certification and shall have attended the OSHA Standards for the Construction Industry (OSHA 510) training program.~~

~~The DSR shall have 2 years prior experience working in a like project or condition, and possess a current CPR /First Aid and AED certification.~~

~~A full time DSR is required up to 25 employees including tiered subcontractors, office and field staff/supervision. For each additional 20 employees, another DSR shall be required including tiered subcontractors. (I.e. at 45 employees there will be 2 DSR's at 65 employees there will be 3 and so on.)~~

~~This applies to all shift work and off hour or weekend work. The DSR shall have no other duties than full time safety. The designated safety representative (DSR) are subject to Webcor/Obayashi Joint Venture's approval and may be removed at any time with or without cause and replacement personnel provided at the subcontractor's/employer's expense.~~

~~An SSR or DSR must be on site at all times work is in progress including day shift, off-hours shift work or weekend work. Each work zone must have a dedicated SSR or DSR at all times work is in progress including day shift, off-hours shift work or weekend work as needed.~~

Every trade subcontractor shall employ (1) full time on Site Safety Representative (SSR) to coordinate project safety requirements. The SSR shall have at a minimum all the following qualifications:

1. **Current CHST certification.**
2. **Attended the OSHA Standards for the Construction Industry (OSHA 500) training program.**
3. **(3) Years prior full time safety duty experience working in a like project or condition.**
4. **Current CPR /First Aid and AED certification.**

The SSR shall have no duties other than full time safety and the administration and coordination of the Zone Designated Safety Representative (DSRs).

In addition to the SSR every trade subcontractor shall employ sufficient full time Designated Safety Representative(s) (DSRs) required to have (1) dedicated DSR in every Zone (per sheet SL-004) in which work is in progress regardless of shift, including day shift, off-hours shift work, or weekend work . The DSR shall have at a minimum all the following qualifications:

1. **Current OSHA 30 certification**
2. **Attended the OSHA Standards for the Construction Industry (OSHA 510 or equivalent) training program.**
3. **(2) Years prior full time safety duty experience working in a like project or condition.**
4. **Current CPR /First Aid and AED certification.**

The DSR shall have no other duties than full time safety and spend 90% of their day in the field at the designated Zone.

The SSR and DSR(s) are subject to Webcor/Obayashi Joint Venture's approval and may be removed at any time with or without cause and replacement personnel shall be provided at the subcontractor's/employer's expense. *…B*

B… **DELETED** ~~**Jobsite Safety Observations/Audits**~~
~~Webcor/Obayashi Joint Venture project management will perform jobsite safety observations/audits. Superintendents should perform documented daily safety audits. Project Managers and Project Engineers should perform documented weekly safety audits. SafeSiteOne should be used to document safety inspections~~ ***…B***

SafeSiteOne Safety Inspection Program
Daily safety inspections using SafeSiteOne are required for all Subcontractors performing labor at the jobsite. SafeSiteOne is a Web-based safety software product that is used by Webcor/Obayashi Joint Venture to document, track and analyze daily job site safety performance. A version of the product has been designed to provide Webcor/Obayashi Joint Venture subcontractors with an easy to use feature set delivering new safety process efficiencies, safety performance tracking and a convenient, cost-effective means to comply with Webcor/Obayashi Joint Venture subcontractor safety documentation and reporting requirements. A job site safety inspection form and accident form are provided for subcontractors to document their own work area safety inspections and worker accident and injury information for automated distribution to Webcor/Obayashi Joint Venture eliminating the time and cost burdens of maintaining separate manual processes for documentation, reporting and data distribution. Accident and safety violation tracking tools in the way of data tables and charts displayed on an information Dashboard are provided for subcontractors to monitor their job site safety performance, identify and respond to trends and indicators and continuously improve their safety strategies. Using the product, subcontractors can view all job site safety violations to which they are assigned by Webcor/Obayashi Joint Venture during Webcor/Obayashi Joint Venture site safety inspections and be able to respond and track their closure. Subcontractors will be able to track their own safety records relative to the performance of all subcontractors on the job site providing an ongoing assessment and identifying accomplishments of their safety performance. ***Subcontractors shall include $75.00 per month to cover the costs of the SafeSiteOne Product.***

B… A… A SafeSiteOne Daily Inspection is to be completed by each **Trade Subcontractor** DSR and Field Supervisor(s) (Foreman and above) daily. Safety exceptions are to be addressed to the SSR. Traffic control exceptions are to be addressed to the General Superintendent. Observed exceptions / violations are to be recorded under Comments and assigned to the responsible person. Verbal exceptions / violations are unacceptable unless they are also recorded under the Comments column. The cumulative amount of a Trade Subcontractor's exceptions noted under comments for the month shall be no less than Webcor/Obayashi Joint Venture's cumulative exceptions for the month. The SSR, General Superintendent, and or responsible party shall promptly, competently, and completely respond to every Safety Memo. ***Recept of progress payment may be contingent upon staying current with completed SafeSiteOne Surveys and Safety Memos. …A …B***

Additional features, forms and product customizations can be made available to subcontractors by contacting MedicaOne directly at info@medicaone.com or by calling (415)661-7587. More information is also available by visiting the SafeSiteOne Web site at www.safesiteone.com.

Pre-Task Planning/Job Hazard Analysis
Written, detailed Job Hazard Analysis is required prior to the start, ***at a minimum***, for the following activities:

- Chemicals: hazardous & irritant
- Concrete: pre-cast, tilt up, vertical, form work

- Confined Space
- Hoisting/rigging activities: including cranes, derricks, forklifts, straddle buggies, etc.
- Demolition activities & hazardous materials assessment: asbestos, lead, biohazards or other chemicals in the workplace, as well as general demolition hazards assessment
- All framing activities (including drywall)
- Excavation & trenching
- Fall hazards: exposures 6+ feet, overhead work
- Material handling
- Non-routine activities: activities not performed in the last six months
- Public exposure: phased occupancy, partial demolition, traffic control, etc.
- Scaffolding
- Steel erection
- Start Up/Shut Down/System Testing activities: tool hook up, introduction of process chemicals into systems, utility tie ins, lockout/tag out, work on energized equipment

General Job Hazard Analysis Guidelines

- JHA planning is to be led by the supervisor and documented in writing
- **Conducted daily prior to start of work for every task.**
- All crew members participate (at the job location) in JHA planning and should sign the completed plan
- Should include hazards and precautions identified in work activities
- Should be readily available at the work site (posted and/or placed where crew members have knowledge of its location at the work area)

JHA plans should be reviewed and revised whenever work conditions (or crew membership) change that may affect the ability to safely complete the work.

Incident Reporting/Root Cause Analysis

This Webcor/Obayashi Joint Venture project plan will be developed incrementally as trade packages are awarded and trade subcontractors are brought on board. Each trade subcontractors plan will become part of Webcor /Obayashi's overall project Documentation and Reporting policy and will be submitted to the Joint Transit Power Authority as they are received.

This Section will conform to Specification Sections 01 13 40 (1.5 A thru C) 01 15 45 (1.9 A thru C) found in The Transbay Transit Center Contract Number 08-04-CMGC-000

The TJPA Representative will in writing inform Contractor of any additional hazardous condition encountered. Trade Sub contractor shall respond indicating its action or disposition of the matter by returning an annotated copy of the written communication to the TJPA Representative within 3 days. If death or serious injuries or serious damages occur, the accident shall be reported at once by telephone or messenger to the TJPA as well as to the proper governing authorities. In addition, Contractor shall promptly report in writing to the TJPA all accidents whatsoever arising out of or in connection with the performance of the work whether on or adjacent to the site, giving full details and statements of witnesses. Within 3 days of occurrence, the Sub Trade contractor shall provide the TJPA with 2 copies of the Sub Trade contractor's accident and near-miss reports. A significant accident is defined to include events where personal injury is sustained or tangible property loss is sustained, or where the event posed a

significant threat of loss or personal injury. If a claim is made by anyone against the any Trade Subcontractor on account of any accident, the Sub Trade contractor shall promptly report the facts in writing to the TJPA, giving full details of the claim. Contractor shall provide the TJPA Representative copies of any laboratory test data, and medical monitoring results for record and evaluation within 3 days of receipt of the above information or upon the request of the TJPA Representative.

All incidents and accidents shall be immediately reported to Webcor/Obayashi Joint Venture Project Management/Safety and fully investigated. Investigation and root cause analysis should be completed to identify the primary reason the incident occurred with an action plan developed to prevent recurrence. Incident Reporting and Root Cause Analysis guidelines are discussed further in the following Appendices.

Safety and Health Training/Information

This Webcor/Obayashi Joint Venture project plan will be developed incrementally as trade packages are awarded and trade subcontractors are brought on board. Each trade subcontractors plan will become part of Webcor /Obayashi's overall project Documentation and Reporting policy and will be submitted to the Joint Transit Power Authority as they are received.

This Section will conform to Specification Section 01 15 45 (1.10A) found in The Transbay Transit Center Contract Number 08-04-CMGC-000

The Trade Subcontractor shall maintain on-site all training records in accordance with federal, state, and local statutes, regulations, and policies, and provide copies of these records to the TJPA upon request.

New workers will be provided with initial training and/or orientation prior to assignment or when assigned to a new task for which training has not been received. Supervisors are expected to be knowledgeable and informed on hazards and safe work practices in their area of responsibility and to coordinate the disbursement of this information to crews. Training will include general area and specific assignment topics. Documentation of required training will be made available to Webcor/Obayashi Joint Venture Project Management and/or Webcor/Obayashi Joint Venture safety upon request. Training, to include refresher training will be provided in accordance with Federal/State OSHA guidelines (Refer to Appendices for additional information on required training). Training may include, but not be limited to:

- Aerial/Boom Lifts;
- Asbestos awareness
- Confined Space Entry;
- CPR/First Aid;
- Electrical;
- Excavation & Trenching;
- Fall Protection;
- Fire Watch;
- Forklift;
- Hazard Communication;
- Hazardous Chemicals;
- Ladders;
- Lasers;
- Lead awareness

- Lockout/Tag out
- Powder Actuated Tools
- Respiratory Protection;
- Rigging
- Scaffolding: Use & Erection/Dismantle;
- Steel Erection;
- Job Hazard Analysis;
- Accident investigation training for Foremen & Superintendents;

CODE OF SAFE CONDUCT AND WORK PRACTICES

The following Safety Procedures will be complied with on the Transbay Transit Center project**.** These Safety Procedures are in accordance with Webcor/Obayashi Joint Venture Safety Program and the division of Industrial Safety Cal/OSHA Construction Safety Orders.

General

This Webcor/Obayashi Joint Venture project plan will be developed incrementally as trade packages are awarded and trade subcontractors are brought on board. Each trade subcontractors plan will become part of Webcor /Obayashi's overall project Health and Safety Plan (HASP) and will be submitted to the Joint Transit Power Authority as they are received. All subcontractors must submit their Company's Project Safety Program to the Project Site Safety Manager prior to the start of their work.

As a minimum, the subcontractor's Safety Program shall meet or exceed Webcor/Obayashi Joint Venture safety requirements, the applicable parts of the Webcor/Obayashi Joint Venture Corporate Safety Manual, the contract documents and federal, state, local or other applicable regulations.

Prior to Subcontractors arrival, measures to identify, monitor and control the worker and the general public from identified hazards shall be included in their safety plans. The Program shall be reviewed by the Site Safety Manager who may require, from time to time, additional written Safety Procedures as may be necessary to address the potential hazards of their operations.

Contractor Weekly Safety Meetings
Subcontractors and tiered subcontractors are required to hold Weekly Safety "Tool Box" Meetings with their field crews. Submit copies of meetings including Safety subjects discussed and attendance, to the Webcor/Obayashi Joint Venture Site Safety Manager. Webcor/Obayashi Joint Venture will provide assistance and information to subcontractors and their sub-subcontractors as requested.

In addition, subcontractors and tiered subcontractors are to attend monthly or whenever determined by Webcor/Obayashi Joint Venture all hands safety meeting.

Personal Protective Equipment

Hardhats

All persons employed on this project are required to wear ANSI Z89.1-approved hardhats as a condition of employment. All visitors on the jobsite will be required to wear hardhats while on the project site. **Any person refusing to wear a hardhat will be immediately dismissed from the**

project site. Metal hardhats and "Cowboy" hardhats are not allowed to be worn. 100% hardhats are required at all times while on the project.

Eye Protection

The wearing of eye protection will be strictly enforced at all times. 100% safety glasses are required at all times while on the project.

Hand Protection

Hand protection must be worn 100% of the time on the project Gloves must be worn in any situation where hand/finger exposure to hazards exist, unless the manufacture of the equipment being used states gloves should not be worn.

Foot Protection and Clothing

All personnel shall wear safety vests, work boots or acceptable work shoes while employed on this project and keep their footwear in good condition at all times. Long pants and shirts with "T-shirt-length sleeves shall be worn at all times. No sneakers, tennis shoes, soft-suede/canvas hiking boots, tank tops, etc., will be allowed. Foot covers must be used with jumping jack compactors and jackhammers.

Hearing Protection

Each subcontractor shall provide and enforce the use of hearing protection for all workers exposed to noise levels as required by law.

Contractor Parking

There is <u>no subcontractor onsite parking</u> on the project. Subcontractors and sub-subcontractors in violation of this request will be towed at their expense without further notice. Because of the restricted nature of the project, this rule will be strictly enforced.

Job Vehicular Traffic and Material Deliveries

Only company-owned vehicles with signage are continuously required for the pursuit of subcontractor's and sub-subcontractor's work, and trucks delivering materials will be allowed access to the project site.

All construction vehicle traffic access will be coordinated by Webcor/Obayashi Joint Venture.

Subcontractors are reminded that continuous 2-way vehicular traffic must be maintained at all times for safe public accessibility unless posted otherwise. Two-way traffic control is to be provided by subcontractors prior to delivery vehicles entering the property.

Subcontractors are to notify Webcor/Obayashi Joint Venture 48 hours in advance for approval of material deliveries. Delivery vehicles will unload and depart the project site as soon as possible.

Material storage and layout must be approved by Webcor/Obayashi Joint Venture prior to delivery.

Temporary Offices

Temporary offices will be constructed of fire-resistant materials only. Temporary office locations must be approved by Webcor/Obayashi Joint Venture prior to installation.

Fire Protection

In case of a fire or explosion, notify Webcor/Obayashi Joint Venture immediately so that necessary emergency fire-fighting equipment can be routed to the jobsite. Emergency phone numbers will be posted

in such a manner so as to be clearly visible. Each trade is responsible for providing fire extinguishers and a fire-watch program for their work as required in renovation and new construction areas.
Reference Webcor/Obayashi Joint Venture's Fire Prevention Program.

Cleanup and Housekeeping
Subcontractors and sub-subcontractors shall leave the site clean and free of debris and hazardous materials by the end of each working day to the satisfaction of Webcor/Obayashi Joint Venture. Each subcontractor is responsible for removal of debris created by their work. Rubbish containers will be placed at a central location for the removal of trash and debris. Accumulation of trash and debris will not be tolerated. Webcor/Obayashi Joint Venture will perform necessary cleanup of same, at subcontractors' expense, upon failure to comply with cleanup notice request.
In addition to subcontractor's own efforts to maintain a clean work area, subcontractors shall provide Webcor/Obayashi Joint Venture with four man-hours of cleanup for every forty man-hours of work. The use of this composite crew will be directed by Webcor/Obayashi Joint Venture. For more details, reference Webcor/Obayashi Joint Venture's Project Bidding Manual section on composite crew project clean-up.

Drinking Water
Subcontractors shall provide potable drinking water, cups, and trash receptacles for their employees, and all trash shall be removed from the site on a daily basis.

Security Services
Subcontractors and sub-subcontractors shall be responsible for the security of toolboxes, onsite storage materials, etc.

Noise Control

This Webcor/Obayashi Joint Venture project plan will be developed incrementally as trade packages are awarded and trade subcontractors are brought on board. Each trade subcontractors plan will become part of Webcor /Obayashi's overall project noise control plan and will be submitted to the Joint Transit Power Authority as they are received.

This Section will conform to Specification Section 01 35 65 (1.2E) (1.8B), (1.8C) found in The Transbay Transit Center Contract Number 08-04-CMGC-000

Trade Subcontractors shall conduct noise inspections and noise testing of equipment to ensure that all equipment on the Site is in good condition and effectively muffled per manufacturer's recommendation. Noise control shall be maintained by the subcontractors in all areas of construction, guarding against undue noise. Playing of radios, including headsets, is prohibited.
All motor-drive equipment shall have a proper exhaust system, which shall meet Cal/OSHA Standards on noise levels. Subcontractors are to provide proper hearing protection to employees using chipping guns, jackhammers, rock drills, or similar devices.

Combustible Material (Gas, Oil, Oxygen)
Separate storage areas for acetylene, oxygen, and gasoline will be established by Webcor/Obayashi Joint Venture. The contractor shall post proper warning signs. All gasoline will be in containers that will meet NFPA and Cal/OSHA requirements, and will be stored in designated areas only. All acetylene and

oxygen bottles will be attached to a cart when in use, or tied off in a vertical position. All carts must be equipped with a fire extinguisher.

All stored oxygen and acetylene must be separated from each other, by a minimum of 20 feet or a fire-rated barrier, with bottle caps secured in place as required by Cal/OSHA.

Ladders
Fall prevention shall be considered by the competent person if employees work from a ladder 6' or more above a lower level. Metal ladders shall not be used on Webcor/Obayashi Joint Venture projects. When ascending or descending a ladder, employees shall maintain a three-point contact and not carry anything that could cause them to fall. Pull ropes should be placed at all access ladders to lift tools or equipment from level to level. As a minimum, only type 1 or 1-A Heavy/Extra Heavy duty ladders, which carry a minimum of 275 lbs. to 300 lbs., will be allowed on Webcor/Obayashi Joint Venture projects.

Scaffolds
All scaffolds will be constructed and maintained so as to meet all Safety requirements of Cal/OSHA and Webcor/Obayashi Joint Venture. Failure to maintain scaffolds in good condition will result in removal by Webcor/Obayashi Joint Venture. **All scaffolds must have top rails, mid rails, and toe boards at all platform levels.** All scaffolds are to be built under the supervision of a competent person. The person's name and their qualifications shall be submitted in writing to Webcor/Obayashi Joint Venture prior to the start of work. Daily pre-shift inspection checklists shall be performed by a competent person, maintained by the subcontractor and submitted to Webcor/Obayashi Joint Venture upon request.

100% fall protection is required at all heights above 6'. A competent person shall determine if it is feasible to use fall protection devices while erecting/dismantling a scaffold. Rolling scaffold wheels shall be locked when in use. A horizontal, diagonal brace shall be in place to prevent the scaffold from "wracking". Cross bracing shall not be used as a top or mid rail.

Fall Protection
Webcor/Obayashi Joint Venture maintains a **zero tolerance policy** for fall protection infractions. Anyone found violating this policy may be removed from the site immediately.

Subcontractor employees are required to provide and use 100% fall protection systems whenever exposed to a fall 6' or greater, including any leading edge work. This can be accomplished through the use of a safety net system, personal fall arrest system or a guardrail system. **Webcor/Obayashi Joint Venture does not allow the use of a Safety Monitor System.**

Each subcontractor is responsible for providing perimeter tie-off protection for its employees. The building perimeter cable is placed as a guardrail protection, and is not provided for tie-off protection.

Electrical
Ground Fault Circuit Interrupter (GFCI) protection is required for all electrical cords and tools. Each subcontractor shall provide GFCI-protected power strips for use in the building when permanent power has been energized and permanent outlets are placed in service. Each contractor will be responsible for providing and maintaining temporary GFCI's for his or her employees if a GFCI receptacle is not available.

Lockout/Tag out Procedures
Subcontractors shall submit their written LOTO program and documented employee training **prior to beginning work on site.** The program must include scope of training, pre-planning and specific LOTO procedures. All individuals who are working in or around the hazardous energy shall place their own lock and tag on the disconnect of the energy source. At no time will someone be allowed to remove another employee's lock unless it has been cleared through Webcor/Obayashi Joint Venture competent supervision.

Floor Openings/Hole Cover Procedures
Subcontractor competent person is responsible for identifying any floor opening/hole requiring to be protected. All floor openings/holes shall be covered/protected using appropriate materials. The covers must be able to withstand 2x the load and be secured to the floor and will be inspected daily by the subcontractor competent person. All floor/hole covers shall be clearly marked "Hole Do Not Remove" in a high visible color. All hole covers must be in compliance with OSHA's 29 CFR 1910.23 (a) – 1910.23 (e) 11.

The building perimeter, shafts, and floor openings shall be protected with guard rails and toe boards. Personnel working at a stationary position within 6'-0" of the building perimeter or the edge of a shaft or a floor opening will wear a full body harness and be tied off with an appropriate lifeline. Subcontractors and tiered sub-subcontractors shall not remove any guard rail or fall protection device without the express consent of, Webcor/Obayashi Joint Venture any employee noticed removing such protection without authorization will be removed from the project without recourse. Any area where guardrails and toe boards have been removed shall not be left unattended during a shift. In no case will any guardrail or toe board be left down at the end of a shift.

In locations where temporary protection conflicts with scheduled construction, the subcontractor or the sub-subcontractor shall notify Webcor/Obayashi Joint Venture in advance of the work of necessary modifications. The subcontractor or the sub-subcontractor shall remove the temporary protection and provide other appropriate temporary measures for the performance of their work.

Safe Lifting
All personnel are to be instructed in the proper methods of lifting heavy objects. These instructions will be discussed at Safety and "Tool Box" Meetings.

Powder Actuated Tools
Only low-velocity-type tools will be allowed on this project. Special permission from Webcor/Obayashi Joint Venture must be obtained before high-velocity types can be used, and then only if the job requires it. All personnel working with powder-actuated tools shall be property instructed and licensed for operation of the tool and shall be in possession of current certification while using powder-actuated tools. Warning signs shall be posted in the work area where powder-actuated tools are in use.

Dismissal From Project
THE FOLLOWING IS PROHIBITED AND THE INDIVIDUALCAN BE SUJECT TO DISMISSAL FROM THIS PROJECT SITE FOR VIOLATION:

- Fighting and horseplay.
- Alcohol consumption or controlled-substance use on the site.
- Crowding or pushing while accessing work levels on ladders, scaffolds, etc.
- Throwing trash or any objects from the building.

- Using fire equipment (extinguishers, etc.) for other than its intended use.
- Destroying property or the work of other trades.
- Stealing.
- Gambling on the project site.
- Unsafe work habits.
- Persons using prescribed medication must notify his/her employer of such use prior to going to work or taking the medication.
- Working while your ability or alertness is so impaired by illness or fatigue or other causes that it might unnecessarily expose you or others to injury.
- Noncompliance of any Safety rules and regulations.
- Lewd or abusive language towards jobsite personnel, Owner's personnel, or any member of the public.

First Aid
All subcontractors and tiered subcontractors are required to have a **CPR/First Aid certified persons and** First Aid Kit available at the jobsite with contents meeting the requirements of Cal/OSHA. Each subcontractor shall make arrangements for medical aid at a facility as provided through their insurance carrier.

Use of Tools and Equipment
Each subcontractor is responsible to provide proper instructions for their employee's use of all tools and equipment.
When the use portable electric or pneumatic tools is needed, proper safety guards must be in place and operational. Power tool cord "whips" must meet NEC requirements. Air compressor hoses must be "clipped" together. Tools are not to be raised or lowered by their cords or air hoses.

Hazardous Material Handling

This Webcor/Obayashi Joint Venture project plan will be developed incrementally as trade packages are awarded and trade subcontractors are brought on board. Each trade subcontractors plan will become part of Webcor /Obayashi's overall project Hazardous Material Handling plan and will be submitted to the Joint Transit Power Authority as they are received.

This Section will conform to Specification Sections 01 13 50 (1.4B and C) and (1.8D) found in The Transbay Transit Center Contract Number 08-04-CMGC-000

Currently Webcor/Obayashi Joint Venture does not anticipate based on the scope of work to have any excavations that will require special protection. In the event the situation does arise, The Trade Subcontractor will submit all appropriate documentation (protections, support systems, inspection process, access) preceding the activity.

Hazardous Communications Program
All subcontractors are to comply with Webcor/Obayashi Joint Venture's Hazard Communication Standard Policy. If you are allergic to cement or are susceptible to lime burns or skin disorders, notify your supervisor in order to make sure you are not assigned work with those substances.
If you are allergic to or cannot use any other chemicals, notify your supervisor.

Confined Space
No person shall enter a confined space such as manholes, underground vaults, tanks, pipes, tunnels, or other similar places until it is determined that it is Safe to enter the space by an approved method. Subcontractor competent person is responsible for identifying any potential confined space and shall initially determine if a permit required confined space exists. A pre-planning meeting must be held if a confined space exits and proper procedures followed to ensure worker safety.

Traffic Work Zone Signaling Requirements
Due to general liability exposure created by improper traffic control, all flagging, training, lane closures, etc. shall conform to the most current edition of the Manual on Uniform Traffic Control Devices (MUTCD). Local permitting issues shall be addressed by Webcor/Obayashi Joint Venture prior to the start of work. All workers in the traffic control area must be trained according to local, state and federal requirements and wear the appropriate reflective vest or high visibility clothing. Stop/Slow paddles, not flags, must be used to control traffic flow.

Equipment
Machinery and equipment shall be inspected and documented daily in addition operated by authorized, trained personnel only. All operated equipment shall have backup alarms in working order. Operators shall inspect each work area to make sure that it is Safe to operate the equipment in that area. Equipment shall not be serviced or repaired while it is in motion or running, unless there are appropriate Safeguards in place to prevent injury. Fuel-operated equipment, such as generators, air compressors, welders, etc., shall have a dedicated fire extinguisher near the equipment at all times when it is in operation. Fire extinguisher shall be rated 10 ABC, minimum.

Excavation and Trenching

This Webcor/Obayashi Joint Venture project plan will be developed incrementally as trade packages are awarded and trade subcontractors are brought on board. Each trade subcontractors plan will become part of Webcor /Obayashi's overall project Hazardous Materials Handling plan and will be submitted to the Joint Transit Power Authority as they are received.

This Section will conform to Specification Sections 00 07 00 (I), 00 08 14(1.2B), 00 08 14(1.4), 00 08 14(1.5B) and 01 35 65 (1.7C) found in The Transbay Transit Center Contract Number 08-04-CMGC-000

Pursuant to section 6705 of the California Labor Code, excavation for trenches 5 feet or more in depth shall not begin until Webcor/Obayashi Joint Venture has received acceptance from the TJPA of Webcor Obayashi's detailed plan for worker protection from the hazards of caving ground during excavation of such trenches. Webcor Obayashi's shoring plan shall be submitted in accordance with the requirements of the Specifications and shall show the details and supporting calculations of the design of shoring, bracing, sloping, or other provisions to be made for worker protection during such excavation.
No plan shall allow the use of shoring, sloping or other protective system less effective than that required by the Construction Safety Orders of the Division of Occupational Safety and Health.
If Webcor/Obayashi Joint Venture shoring plan varies from the shoring system standards established by the Construction Safety Orders, the plan shall be prepared and sealed by an engineer retained by Webcor/Obayashi Joint Venture who is registered as a civil or structural engineer in the State of California. The TJPA's acceptance of Webcor/Obayashi Joint Venture shoring plan shall not be construed

to relieve Webcor/Obayashi Joint Venture of its sole responsibility for damage or injuries related to the excavation resulting from unsafe shoring.

Currently Webcor/Obayashi Joint Venture does not anticipate based on the scope of work to have any excavations that will require special protection. In the event the situation does arise, The Trade Subcontractor will submit all appropriate documentation (protections, support systems, inspection process, access) preceding the activity.

A… The Trade Subcontractor will comply with all requirements of federal OSHA, Cal/OSHA, the California Labor Code, Trade Subcontractor safety requirements, and these Contract Documents. The more stringent requirements shall apply. ***…A***

Should Trade Subcontractors be notified by the TJPA of any unsafe or unhealthy condition associated with the performance of the Work and be required to take remedial action to correct such conditions, Trade Subcontractors shall take action immediately, if so directed, or within 48 hours after receipt of a notice of violation.

A… The health and safety plan shall be certified by Trade Subcontractor's competent hazardous materials supervisor and submitted to the TJPA for review and comment prior to implementation. ***…A***

Prior to commence of earthwork activities the Trade Subcontractor shall review the, SMP. Submit for approval a comprehensive and site specific HASP prepared by a certified industrial hygienist.

Daily, pre-shift inspection of excavations, the adjacent areas and protective systems shall be made by the competent person for evidence of potential cave-ins, hazardous atmospheres or protective system failure. Daily, pre-shift inspection checklists shall be maintained by the subcontractor and submitted to Webcor/Obayashi Joint Venture weekly.

No person shall enter an excavation where protection from ground movement is required until such protection is in place. **100% fall prevention is required when working next to excavations greater than 5' in depth.** Ladders or other means of approved access shall be used for all excavations. Stepladders shall not be used in a "leaning" position to enter or exit excavations.

Respiratory Protection

- Conditions may exist which require the utilization of respiratory equipment to protect employees against exposure to the inhalation of toxic or harmful gasses, vapors, mists, fumes and dust. Each Contractor must implement and enforce a respiratory program in accordance with CAL/OSHA standards to protect employees from these types of exposures.
- Only respirators that are applicable and suitable for the purpose intended will be used. They will be selected on the basis of the hazards to which the employee is exposed.
- Employees required to use respiratory protective equipment approved for use in atmosphere immediately dangerous to life shall be thoroughly trained in the use and limitations of such equipment.
- Respiratory protective equipment will be inspected regularly and maintained in good condition. Chemical cartridges will be replaced per manufacturer's recommended or calculated filter change-out schedule so as to provide complete protection. Dust respirators are to be replaced in accordance with manufacturer specifications.

- Respiratory protective equipment, which has been previously used, shall be cleaned and disinfected before it is issued to another employee.
- Workers required to wear respiratory protection shall have been medically evaluated and approved to wear such devices. A copy of each of its worker's medical approval will be kept by each contractor on site.
- Employee Training (Respirators, Breathing Apparatus, etc.)
- All employees required to use personal protective equipment shall be given individual instruction by contractor regarding PPE prior to its use. This training shall be documented and a record kept on site.
- All employees must be clean-shaven to ensure the proper fitting of the respirator. Each contractor must perform fit testing on each employee to ensure the proper fit of the respirator. The results of the fit test shall be documented and a record kept on site.
- Each contractor must have a written respirator program and this program is to be submitted to the construction manager, General Contractor and Safety Coordinator prior to working at this site.

B… ***A…*** **Crane Lift Plan Process Requirements.**

1. The Crane Use Planning Process has two parts:
   a. Crane Lift Plan
   b. Crane Daily Safety Review (Note: Required EVERY DAY a crane is used)
2. A Complete and Competent Crane Lift Plan (reviewed by Webcor/Obayashi Joint Venture) is required for any crane lift while working on a Webcor/Obayashi Joint Venture project.
3. Complete and Competent Crane Lift Plans must be submitted to Webcor/Obayashi Joint Venture at least 48 hours (2 business days) prior to mobilization. **Neither TJPA nor Webcor/Obayashi Joint Venture shall be held responsible for any delay allegations as a result of the Trade Subcontractor failing to submit Crane Lift Plans on a timely basis.**
4. The Trade Subcontractor is responsible to visit the site prior to the lift date to review documentary information pertaining to the site, which is maintained by Webcor/Obayashi Joint Venture.
5. The Trade Subcontractor is responsible to obtain all information that is necessary to develop a power line safety plan.
6. The Complete and Competent Crane Lift Plan may be valid for more than one day, as long as the configuration, location, maximum expected load, and maximum expected radius does *not* change. Use multiple lift plans for multiple locations.
7. Complete and Competent Crane Lift Plans must be based on "worst case" combination of load weight with chart deductions and lift radius for a specific crane configuration in a specific location.
8. The Crane Lift Plan must be *COMPLETE & COMPETANT* (and reviewed by Webcor/Obayashi Joint Venture) along with attachments to include, ~~however~~ **but is** not limited to:
   a. Plot plan with crane location (identify swing path, delivery truck locations, location of any overhead power lines, etc.).
   b. Elevation plan.
   c. Crane load charts and calculations including any notes.
   d. Dimension illustration and specifications for crane and range chart.
   e. Operator's: License, training information, USDOT medical certificate, OSHA trainings cards as required by the project.
   f. Rigging plan, lists, and diagram.
   g. Statement of qualification and competent person designation form for: Crane operator, A/D supervisor, rigger and signal person.

h. JHA for: Assembly / disassembly of crane, power line encroachment, truck load / unload, etc.
i. Logistics and assembly / dismantle plan.
j. 3rd party annual inspection, certification, and report (Inspector shall be registered with the CCAA).
k. Actual weights of materials.
l. Lighting and wind restrictions (from operators manual).

9. Work that is not anticipated in the Complete and Competent Crane Lift Plan, but may arise due to site conditions (moving equipment, loading materials onto floors, etc.) must be reviewed with Webcor/Obayashi Joint Venture prior to hoisting. Changes affecting crane configuration may require the Complete and Competent Crane Lift Plan to be amended.
10. Lifts exceeding 75% of the cranes stability / structural capacity chart, requiring movement of a crane carriage with the load, personnel platforms, critical loads (long lead time, cost), tripping loads, work over occupied facilities, or work involving encroachment on public rights of way, will also require the preparation, submittal and review of a specific JHA (Note: These lifts are discouraged. These lifts must be reviewed in advance. The Complete and Competent Crane Lift Plan(s) may have to be prepared and stamped by a **licensed** professional engineer (PE) to be provided by the Trade Subcontractor.
11. **DELETED** ~~All rigging devices MUST bear the name of the manufacturer and be certified as to their capacity. Custom-fabricated devices (lifting beams, spreader bars, etc.) may be acceptable with proper PE stamp or proof testing as required by applicable standards. Capacities shall be marked and legible on all such devices.~~
12. The Trade Subcontractor / Crane Company / Rigging Company is responsible for the accuracy of all calculations and inspections. This planning process has been established to help ensure proper coordination between subcontractors and Webcor/Obayashi Joint Venture. No warranty or certification of the suitability of this plan is accepted by Webcor/Obayashi Joint Venture. It is the responsibility of the Trade Subcontractor and the Crane Operator to ensure that they and their employees are qualified, competent, properly equipped and properly trained to perform the activities outlined in this plan. ***…A*** ***…B***

Cranes, Hoisting and Rigging

Introduction

The safe operation and proper maintenance of cranes and rigging on the site shall be the overall responsibility of the contractor. Each contractor shall also be held accountable for compliance with CAL/OSHA crane regulations for all cranes or derricks on the site, whether contractor owned, leased or rented. All rigging inspection logs subcontractor and submitted to Webcor/Obayashi Joint Venture mothly.

Riggers shall meet the qualified rigger requirements of subpart CC – Cranes and Derricks in Construction, as specified in 29 CFR 1926.1401, 1926.1404, and 1926.1425. These provisions are effective November 8, 2010. The more stringent rule shall apply.

Special Provisions

- Prior to its initial use on the site or after repairs have been made each crane or derrick shall be thoroughly inspected by a certified independent third party. Any deficiencies found shall be corrected before the equipment is placed into service.

- A copy of the annual certification inspection performed by a certified independent third party shall be submitted to the Webcor/Obayashi Joint Venture Safety Manager prior to the crane being operated on site.
- Each contractor shall designate a competent person who shall inspect all cranes and derricks daily as part of the contractor's job site inspection program. Such inspections shall be documented. Defective equipment shall be removed from service and repaired and service/repair shall be documented.
- The contractor or vendor supplying the equipment shall inspect each crane at least monthly and provide a written report as to the results of the inspection. Defective equipment shall be removed from service.
- Loads shall not be passed or suspended over persons.
- Tag lines or guide ropes shall be used to control all loads.
- Barricades for employee safety shall be maintained around the swing radius of the crane cab.
- Crane Operator Qualifications
- Each contractor shall as specified in 29 CFR 1926.1427. State or local government
- licensing is effective November 8, 2010 select only those personnel meeting the following qualifications to operate cranes and other hoisting equipment:
- Designated operators who have been licensed by an approved agency or union and meet the requirements of Chapter 5, ANSI B30.
- Crane operators will meet the minimum requirements by the D.O.T. Physical Examination, as provided in D.O.T. 391, Physical Examination for truck drivers. No crane operator will be allowed to operate a crane until they have passed the Physical Exam conducted by a licensed Physician approved by the D.O.T.
- Coordinators certified for crane inspection;
- Test and maintenance personnel when necessary.
- Only designated operators who have been licensed by an approved agency or union and meet the requirements shall be in, or on, the crane during operations.
- Operator's Responsibilities
- Each crane operator will be specifically assigned the responsibility for safe operations and shall be given written instructions as applicable. These responsibilities shall include:
- Verification of a current "annual inspection" certification for the crane.
- Verification that manufacturer's rated load capacities, recommended operating speeds, and special warnings or instructions are posted on the crane and are visible from the operator's station.
- Daily inspection of:
- Condition of brakes under no-load conditions
- Functioning of various safety devices and limiting devices fitted to the hoisting apparatus
- The electric power installation
- The overload controls
- Condition of structural members for cracks, bends, misalignment, etc.
- Fire extinguisher in cab
- Assuring that routine maintenance is performed, as well as necessary repairs.
- Responsibility for assuring that signaling and communications are adequate. This includes making sure that personnel at materials loading and receiving areas use correct hand signals. Where conditions require, radio communications will be used with a clear channel for crane operations.
- Refusing to lift any loads that are not safely rigged. This refusal cannot be overridden by job supervisory personnel.

- Making sure that adequate clearances exist between operating areas and nearby structures, especially power lines.
- Each crane operator shall ensure that good housekeeping is maintained in his or her equipment.
- Operating Procedures
- Each contractor shall ensure that its crane operators:
- Not engage in any practice, which may divert his attention while engaged in crane operations.
- Not operate the crane if physically or mentally unfit, or if taking prescription drugs, which may affect judgment.
- Not respond to any signal, which is unclear or is given by anyone other than appointed signalmen. Exception: The operator shall respond to a stop signal given by anyone.
- Have final responsibility and control over the crane operations. When there is any doubt as to safety, the operator shall have the authority to stop and refuse to handle the loads until safety has been assured. Any manager, supervisor or person attempting to bypass the crane operator's authority on this issue will be immediately removed from the project.
- Shall be intimately familiar and have thorough knowledge of the crane and its care, the operators' manual, and load charts. He shall be responsible for notifying its supervisor of any needed adjustments or repairs, and for logging his findings in the crane log.
- Shall, upon request, demonstrate his ability to determine total load weight and its relationship to the crane load charts.
- Immediately shut down the crane if any part of the crane, rigging or load strikes any object. The crane will be re-inspected by a qualified person, and if damage is detected, all repairs shall be completed under the guidelines of the manufacturer. The crane must then be re-inspected by a third party agency prior to beginning operations again.
- Never leave the controls while there is a load on the hook.
- Stop the crane operation if there are any problems and notify the Safety Coordinator.
- Contractor Responsibilities
- Making sure that rigging equipment is in good condition and provided with safety devices as applicable. This includes such things as:
- Safety latches on hoisting hooks.
- Chains, wire rope, slings, etc. are free from defects and conform with standard load ratings for work being done.
- Eye splices conform to safety standards.
- Employee Training
- Each contractor shall ensure that all of its employees involved in crane activities receive comprehensive training as to their responsibilities. This training shall include hand signals and those authorized to give signals. Said training shall be documented.
- Hoisting and Rigging
- Documented inspections of hoisting and rigging equipment shall be conducted by a competent person before their use to ensure that it is in safe operating condition and that lifts will be conducted in a safe manner.
- Damaged or defective equipment shall be removed from service and removed from the project site.
- Accessible areas within the swing radius of the rotating superstructure shall be properly barricaded to prevent employees from being struck or crushed by the crane.
- Lifts shall not be conducted over employees, visitors, or areas occupied by the public.
- The crane operator shall be responsible for determining the safe operation of their crane and the safety of each lift.

- Routes of suspended loads shall be preplanned to ensure no workers or the public are directly below suspended loads.
- Tag lines shall be used for controlling all loads.

A…

~~Crane Lift Plan Process Requirements~~

1. ~~The Crane Use Planning Process has two parts:~~
    a. ~~Crane Lift Plan~~
    b. ~~Crane Daily Safety Review (Note: Required EVERY DAY a crane is used).~~
2. ~~A Complete and Competent Crane Lift Plan (reviewed by Webcor/Obayashi Joint Venture) is required for any crane lift while working on a Webcor/Obayashi Joint Venture project.~~
3. ~~Complete and Competent Crane Lift Plans must be submitted to Webcor/Obayashi Joint Venture at least 48 hours (2 business days) prior to mobilization. The TJPA nor Webcor/Obayashi Joint Venture will be held responsible for any delay allegations the result of the Trade Subcontractor failing to submit Crane Lift Plans on a timely basis.~~
4. ~~The Trade Subcontractor is responsible to visit the site prior to the lift date to review documentary information pertaining to the site, which is maintained by Webcor/Obayashi Joint Venture.~~
5. ~~The Trade Subcontractor is responsible to obtain all information that is necessary to develop a power line safety plan.~~
6. ~~The Complete and Competent Crane Lift Plan may be valid for more than one day, as long as the configuration, location, maximum expected load, and maximum expected radius does not change. Use multiple lift plans for multiple locations.~~
7. ~~Complete and Competent Crane Lift Plans must be based on "worst case" combination of load weight with chart deductions and lift radius for a specific crane configuration in a specific location.~~
8. ~~The Crane Lift Plan must be COMPLETE & COMPETANT (and reviewed by Webcor/Obayashi Joint Venture) along with attachments to include however not limited to:~~
    a. ~~Plot plan with crane location (identify swing path, delivery truck locations, location of any overhead power lines, etc.).~~
    b. ~~Elevation plan.~~
    c. ~~Crane load charts and calculations including any notes.~~
    d. ~~Dimension illustration and specifications for crane and range chart.~~
    e. ~~Operator's: License, training information, USDOT medical certificate, OSHA trainings cards as required by the project.~~
    f. ~~Rigging plan, lists, and diagram.~~
    g. ~~Statement of qualification and competent person designation form for: Crane operator, A/D supervisor, rigger and signal person.~~
    h. ~~JHA for: Assembly / disassembly of crane, power line encroachment, truck load / unload, etc.~~
    i. ~~Logistics and assembly / dismantle plan.~~
    j. ~~3rd party annual inspection, certification, and report (Inspector shall be registered with the CCAA).~~
    k. ~~Actual weights of materials.~~
    l. ~~Lighting and wind restrictions (from operators manual).~~
9. ~~Work that is not anticipated in the Complete and Competent Crane Lift Plan, but may arise due to site conditions (moving equipment, loading materials onto floors, etc.) must be reviewed with Webcor/Obayashi Joint Venture prior to hoisting. Changes affecting crane configuration may require the Complete and Competent Crane Lift Plan to be amended.~~

10. ~~Lifts exceeding 75% of the cranes stability / structural capacity chart, requiring movement of a crane carriage with the load, personnel platforms, critical loads (long lead time, cost), tripping loads, work over occupied facilities, or work involving encroachment on public rights of way, will also require the preparation, submittal and review of a specific JHA (Note: These lifts are discouraged. These lifts must be reviewed in advance. The Complete and Competent Crane Lift Plan(s) may have to be prepared and stamped by a professional engineer (PE) to be provided by the Trade Subcontractor.~~
11. ~~All rigging devices MUST bear the name of the manufacturer and be certified as to their capacity. Custom-fabricated devices (lifting beams, spreader bars, etc.) may be acceptable with proper PE stamp or proof testing as required by applicable standards. Capacities shall be marked and legible on all such devices.~~
12. ~~The Trade Subcontractor / Crane Company / Rigging Company are responsible for the accuracy of all calculations and inspections. This planning process has been established to help ensure proper coordination between subcontractors and Webcor/Obayashi Joint Venture. No warranty or certification of the suitability of this plan is accepted by Webcor/Obayashi Joint Venture. It is the responsibility of the Trade Subcontractor and the Crane Operator to ensure that they and their employees are qualified, competent, properly equipped and properly trained to perform the activities outlined in this plan.~~

…A

HAZARD COMMUNICATION STANDARD POLICY

This Webcor/Obayashi Joint Venture project plan will be developed incrementally as trade packages are awarded and trade subcontractors are brought on board. Each trade subcontractors plan will become part of Webcor/Obayashi's overall project Hazardous Material Communication plan and will be submitted to the Joint Transit Power Authority as they are received.

This Section will conform to Specification Sections 01 15 45 (1.2A1, 1.2A2),(1.13D),(1.4A), (1.4C) found in The Transbay Transit Center Contract Number 08-04-CMGC-000

A… Trade Subcontractors shall submit the following in accordance with this Contract specification: A HASP. Upon approval of the HASP, Trade Subcontractor shall provide 2 copies on compact disc in Portable Document Format (PDF) with properly labeled cases. Materials Safety Data Sheet (MSDS) for all chemicals and other hazardous materials to be used. This submittal is only as warranted. Trade Subcontractor's site-specific HASP. Trade Subcontractors shall submit a site-specific environmental HASP in accordance with these specifications and 29 CFR 1910.120, 8 CCR 5192. The HASP shall remain in effect throughout the life of the Contract, and a copy of the HASP must be on site at all times. ***…A***

Trade Subcontractors shall submit 5 copies of the HASP at least 10 working days before any demolition or any building materials-disturbing activity, and no later than 30 days after the Notice to precede for each Trade Subcontract package. The TJPA will not review the HASP for its content, nor will the TJPA be liable for Contractor's failure to have an adequate HASP or implement it. Receipt of the HASP by the TJPA neither constitutes the legality of the HASP nor incurs liability with Trade Sub contractor.

- Each subcontractor is to submit a copy of its written Hazard Communication Program to the Webcor/Obayashi Joint Venture jobsite. An initial hazardous material/chemical listing for this specific jobsite must accompany the Program.
- All subcontractors are required to maintain MSDSs on the project.
- A complete file of all MSDSs submitted is to be located at the jobsite office for review by all workers during job hours (Webcor/Obayashi Joint Venture Subcontractors, and Sub-subcontractor/Suppliers).
- Noncompliance with this portion of the Webcor/Obayashi Joint Venture Safety Policy will be written up as a Safety violation and may result in a Safety fine and/or nonpayment to the subcontractor(s).
- Webcor/Obayashi Joint Venture is only required to train its employees to comply and observe the policy. It is the responsibility of each subcontractor and each sub-subcontractor to train his employees in the implementation and use of the Hazard Communication Policy.
- Each subcontractor will discuss each new substance introduced on the jobsite at the weekly Safety meetings with his crews and the Superintendents of other subcontractors at the Project Safety Meeting.
- Each subcontractor must label the contents of all containers including secondary containers. The label must identify:
    - Substance
    - Hazard Warnings
    - Name and address of the manufacturer
- Each subcontractor must:
- Train his personnel regarding Hazardous Communications, and specifically as t the dangers of working with these substances, chemicals, materials. Keep copies of training certificates at jobsite.
- Provide proper personnel protective equipment, as required.
- Train employees in the first-aid and medical emergency procedures associated with each material.
- Keep copies of all MSDSs at the jobsite.

- Bulk fuel storage is not allowed onsite.

EMERGENCY MEDICAL PROCEDURES

The purpose of this program is to establish standard jobsite procedures for reporting accidents, administering first aid, and emergency medical procedures.

Each subcontractor and sub-subcontractor shall maintain a Cal/OSHA-approved First Aid Kit on the Project at all times. Each subcontractor shall designate an employee qualified in first-aid treatment as their Safety Coordinator. It shall be the Safety Coordinator's responsibility to treat minor injuries and complete and submit required accident reports to Webcor/Obayashi Joint Venture.

Minor Injuries
Minor injuries are those which require only immediate first-aid treatment and do not result in lost work time.

In the event of a minor injury, the subcontractor's Safety Coordinator shall provide first aid and/or take the injured employee to the designated medical center or clinic for treatment and checkup if necessary.

Persons who have sustained head injuries, major impacts, or whose injuries are the result of a fall shall be evaluated and stabilized by professional medical personnel and provided transportation to the medical facility by the subcontractor or EMT.

Upon return from treatment, the employee shall return to work ONLY if so released in writing by the attending physician.

All minor accidents shall be a topic of discussion at the subcontractor's next scheduled Safety Meeting, to include cause of accident and preventive measures to be taken to avoid future similar accidents.

Major Injuries
Major injuries or illness are those which require extended medical treatment with hospitalization for more than 24 hours resulting in loss of work time, or result in death, disfigurement, or dismemberment.

In the event of a major injury, the first person to encounter the injuries shall summon others to notify the Webcor/Obayashi Joint Venture Field staff and provide the appropriate first-aid treatment if qualified. Any subcontractor or sub-subcontractor may dial 911 to request medical assistance. Emergency vehicles shall be directed to enter the Project at site entrance that will be determined as conditions change on the logistic map.

Upon entering the project, the emergency vehicle shall be directed to the exact location of the injured.

While awaiting arrival of the Emergency Vehicle(s), the injured shall not be moved unless he/she is in immediate danger of additional injury in his/her current location. Equipment and material involved in or responsible for the accident shall not be disturbed unless it presents an additional danger to the injured person(s).

The closest Emergency Medical Facility is:

St. Francis Health Center
24 Willie Mays Plaza
San Francisco, CA 94107-2134
Error! Hyperlink reference not valid.(415) 972-2249

Immediately after the accident, Webcor/Obayashi Joint Venture will meet with the responsible subcontractor's Superintendent and/or Foremen, review the conditions, and direct the appropriate corrective action. The subcontractor's Safety Coordinator shall complete and submit a copy of all required reports to Webcor/Obayashi Joint Venture.
Within 24 hours of a major injury, Webcor/Obayashi Joint Venture shall conduct a Safety Meeting with attendance required of all jobsite personnel. Topics to include: cause of accident, nature of injury, immediate prognosis for full recovery from injury (if available), and preventive measures to be taken to avoid future similar accidents.

ACCIDENT / INJURY MANAGEMENT

Accident Reporting
A… All on-site incidents and accidents must be reported to Webcor/Obayashi Joint Venture Project Management immediately. All accidents resulting in industrial injuries or illnesses occurring on the jobsite will be thoroughly investigated. The investigation will be conducted by the controlling employer's Project Management, supervisor and Safety Coordinator, under the direction of Webcor/Obayashi Joint Venture Project Management. This includes accidents, injuries and illnesses of workers whether the injury resulted in medical treatment; no claim was filed, or is a non-industrial injury. Completion of appropriate forms, as defined in the Incident Reporting Appendix must be completed immediately after occurrence. ***…A***

Accident Investigation
The initial accident investigation is to be completed within 24 hours, with immediate notification of Webcor/Obayashi Joint Venture safety (refer to Incident Reporting Appendix). Identification and review process of root causes must be completed. Corrective actions, identification of persons responsible for corrective actions, and date of completion must be established. Follow up documentation verifying corrective action completion is required. Lessons learned from root cause analysis reviews will be shared with the project, regionally and globally.

Investigation reports of accidents or injuries requiring medical treatment must include medical treatment forms and completed first report or injury forms.

This project requires that an Incident Investigation form be completed for all on-the-job accidents. The form is contained with the Incident Reporting Appendix. This form must be completed as soon as possible (limit - within 1 working day) after occurrence of any injury that results in medical treatment or property damage. After completion, the form must be returned to Webcor/Obayashi Joint Venture Project Management/Safety for corrective action and processing.

Copies of all accident investigation documentation must be submitted to the Webcor/Obayashi Joint Venture Regional Safety Director. If required by law, injury notification to OSHA must be coordinated through the Webcor/Obayashi Joint Venture Regional Safety Director and the Corporate Safety Director.

Accident Analysis
Webcor/Obayashi Joint Venture provides a safe and healthful work environment for all workers through progressive, proactive injury prevention planning. Job pre-planning and identification of up-coming potentially hazardous activities is supported by regular review of trend analysis.

To identify root causes of accidents and at-risk behavior Webcor/Obayashi Joint Venture and subcontractor management will be required to, within 48 hours of the incident, conduct a "lesson learned" meeting. The meeting will analyze any injury accidents, environmental incident, or impact to existing facilities and operations. Accident trends will be identified and plans developed to prevent additional incidents. A complete Root Cause Analysis will be performed involving at least the Webcor/Obayashi Joint Venture and Subcontractor Project Teams. The mission of these meetings will be to identify problem areas, develop specific action plan(s) to address root causes and at-risk behaviors, and to immediately implement corrective actions. Webcor/Obayashi Joint Venture will periodically review implemented plans for effectiveness. Lessons learned from root cause analysis reviews will be shared with the project, regionally and globally.

RESPONSIBILITIES FOR SAFETY and LOSS CONTROL

Overview
The objective of this project safety overview (PSO) is to establish that safety and health must be addressed throughout the entire project. The prevention of accidents and protection of property are company values and are integral to our success. All safety issues shall receive active support and participation by the entire project team.

The principles of safety and loss control are intended to prevent injuries on the jobsite and to reduce the potential for damage to property and equipment. No phase of construction is of greater importance than incident prevention. Accidents that result in personal injury or damage to property and equipment represent needless waste and loss.

Planning for safety starts with project design and continues through purchasing, fabrication and construction in all phases of the project. Practical steps will be taken to maintain an Injury Free Environment. All subcontractors must accept responsibility for preventing accidents and be responsible for thorough safety and loss control training and instruction for their workers.

The primary objective of the Webcor/Obayashi Joint Venture PSO is to coordinate the elimination or reduction of risk associated with the construction of the project. Associated missions are to promote safe work practices/behaviors, prevent accidents, prevent worker injuries, prevent damage to property, and promote maximum efficiency and effect savings by reducing unplanned business interruptions.

Active participation by the management of Webcor/Obayashi Joint Venture, subcontractors, tiered subcontractors and all workers will make the program effective and successful by coordinating the participants' efforts in performing the following tasks:
Providing a safe environment in which workers can perform high quality work.
Using job hazard analysis pre-task safety planning as a tool to reduce injury to persons and property.
Conduct jobsite safety audits to locate and abate unsafe work practices/behaviors and unsafe conditions.
Protecting the public and property potentially affected by Webcor/Obayashi Joint Venture sites.
Educating and training workers through:

- **New hire/site specific safety orientation**
- **Safety meetings**
- **Task specific safety training; i.e., hazardous communications (HAZCOM), construction safety practices, excavation and trenching safety, confined space entry, equipment operations, etc.**
- **Mandatory personal protective equipment (PPE) programs**
- **Immediate injury reporting and effective record keeping to maintain an up-to-date accident experience and trends analysis**
- **Use of accident investigation information to abate deficiencies and eliminate any additional losses**

Webcor/Obayashi Joint Venture Management Team
Webcor/Obayashi Joint Venture Management Team is responsible for construction management services for the Transbay Transit Center and for:

- Encouraging, reinforcing and modeling Webcor/Obayashi Joint Venture culture, including Injury Free Environment initiatives
- Participating in the development and assessment of EH&S leading indicators
- Reviewing and approving project corrective action/recovery plans.
- Instituting accountability when action plans and culture are not maintained
- Has the authority to stop any operations that pose a potential threat

Webcor/Obayashi Joint Venture Project Manager (Richard Gangitano)
The Webcor/Obayashi Joint Venture Project Manager is responsible for construction management services for the Transbay Transit Center and for:

- Determining if contract documents and specifications support the project's safety missions and objectives
- Monitoring subcontractor selection process and adherence to established guidelines
- Periodically auditing subcontractor's safety plans for compliance with the Webcor/Obayashi Joint Venture 's EHSP
- Participating in pre-task planning and subcontractor pre-construction safety meetings
- Being aware of loss control and public protection requirements of the project
- Participating in fact finding, root cause analysis, and the implementation of corrective actions associated with injury/incident investigations
- Documenting weekly jobsite safety audits
- Facilitating monthly craft feedback luncheon
- Supporting Webcor/Obayashi Joint Venture EHS personnel and cooperating with all designated personnel in obtaining corrective actions necessary to comply with the Webcor/Obayashi Joint Venture EHSP
- Has the authority to stop any operations that pose a potential threat
- Promoting and supporting our Injury Free culture

Webcor/Obayashi Joint Venture Project Superintendents (Michael Poole)
It is the responsibility of Webcor/Obayashi Joint Venture Superintendents to oversee safety on jobsite. Their EHS responsibilities include:

- Overseeing the planning and execution of all work in compliance with the Webcor/Obayashi Joint Venture EHSP and contract specifications
- Being aware of loss control and public protection requirements identified in the safety specifications of the contract documents
- Completing daily jobsite safety audits and reviewing completed jobsite safety audits to ensure identified hazards are addressed in a timely manner

- Participating in pre-task planning, and subcontractor pre-bid, pre-construction and/or kick-off meetings
- Monitoring and participating in job hazard analysis and pre-task planning
- Requiring supervisors and workers to use personal protective equipment in accordance with the Webcor/Obayashi Joint Venture EHSP and local, state and federal safety regulations
- Participating in fact finding, root cause analysis and the implementation of corrective actions associated with injury/incident investigations
- Ensuring Injury Accident Investigation Packets are accurately completed and forwarded to designated individuals
- Participating in and encouraging weekly tool box/tailgate safety meetings, and evaluating their effectiveness
- Taking appropriate action to abate identified unsafe conditions and practices and document corrective actions.
- Supporting Webcor/Obayashi Joint Venture EHS, and cooperating with all designated project safety personnel in obtaining corrective actions necessary to comply with the Webcor/Obayashi Joint Venture EHSP
- Has the authority to stop any operations that pose a potential threat
- Promoting and supporting Injury Free culture

Webcor/Obayashi Joint Venture Project EHS Manager (Raymond Ramierez)

The Webcor/Obayashi Joint Venture Project EHS Manager has authority for safety and health on the project. The Webcor/Obayashi Joint Venture EHS Professional is considered to be the program administrator and has the authority delegated by Webcor/Obayashi Joint Venture Corporate EHS to implement and promote safety. Duties of Webcor/Obayashi Joint Venture Project EHS Manager include:

- Helping to familiarize Webcor/Obayashi Joint Venture and subcontractor project managers, superintendents and supervisors with the Webcor/Obayashi Joint Venture EHSP. These individuals must be familiar with safety and health hazards to which all workers may be exposed, as well as applicable laws, regulations and safety rules and policies.
- Supporting project management in achieving an injury, incident and impact free environment.
- Help assure that all workers are trained in accordance with applicable requirements
- Helping to ensure that observation, inspection, recognition, evaluation and abatement of hazards are conducted on a continuing basis
- Continually developing new methods for abating hazards
- Helping to ensure that hazards are abated in a timely and effective manner
- Reporting all injuries immediately to Webcor/Obayashi Joint Venture Project Management. Webcor/Obayashi Joint Venture EHS also has the responsibility for overseeing development, implementation and maintenance of the project's safety program by:
- **Requiring subcontractors to incorporate the requirements of the Webcor/Obayashi Joint Venture's EHS Plan into their safety programs and safety orientation if theirs are less protective than those of. Webcor/Obayashi Joint Venture.**

- **Expediting corrective action(s) to abate any observed or potential safety exposure(s) to workers.**
- **Requiring Webcor/Obayashi Joint Venture Project Management and Safety Coordinators to continuously monitor Webcor/Obayashi Joint Venture and the subcontractor's safety performance and expedite abatement action(s).**
- **Overseeing the implementation of emergency response procedures, and helping to assure that Webcor/Obayashi Joint Venture and subcontractor's personnel are trained to handle onsite emergencies.**
- **Setting project missions and milestones and reporting indicators for all project personnel.**

Webcor/Obayashi Joint Venture EHS is further responsible for monitoring the subcontractor's compliance with the Webcor/Obayashi Joint Venture EHSP. Webcor/Obayashi Joint Venture EHS must help ensure that the guidelines, rules and procedures in this document are followed for site work, being familiar with local emergency services and conducting or taking the necessary steps to help ensure that tool box/tailgate safety meetings are conducted before work startup. Additional meetings may be required for specific job tasks or site activities. Webcor/Obayashi Joint Venture EHS also must help monitor the maintenance and inspection of PPE, onsite hazards, the physical condition of site personnel, and perform daily safety audits of work site activities.

Additional duties include maintaining safety files, which will include training and applicable medical certifications, environmental testing and special associated training, tool box/tailgate meeting notes and rosters, safety observation/audit reports, investigation reports including near-misses, injury summaries, required safety permits, security issues, or other safety and health documentation, as applicable. Webcor/Obayashi Joint Venture EHS has the authority to stop any operations that pose a potential threat to site personnel.

Furthermore, Webcor/Obayashi Joint Venture EHS will:
Report unsafe acts and conditions to the worker’s supervisor and/or safety coordinator for prompt corrective action and stop all life threatening situations immediately upon knowledge. Webcor/Obayashi Joint Venture requires prompt correction of safety infractions.
Help monitor the subcontractor selection process and adherence to established environmental safety and health guidelines
If the subcontractor does not make immediate corrections after initial notification, Webcor/Obayashi Joint Venture EHS will:

- **Notify the subcontractor’s Project Management in writing to make prompt corrective action to help eliminate construction safety concerns.**
- **Forward copies of the written notice to Webcor/Obayashi Joint Venture Project Management**
- **Develop the direction to help resolve outstanding construction safety issues and maintain documentation of corrective actions**

Help ensure that the proper steps are taken in the case of emergencies when a major event resulting in a fatality, multiple injuries, or property loss occurs. Webcor/Obayashi Joint Venture EHS is responsible for requiring that we preserve the accident scene in an "as is" condition, including any construction equipment involved, to allow for a proper investigation. Webcor/Obayashi Joint Venture EHS must order, if necessary, the area or piece of equipment to be stabilized to preclude further injuries or loss.
Notify Webcor/Obayashi Joint Venture Project Manager should we be subjected to an OSHA (federal or state) inspection. Should citations, warnings or safety violations be issued, we copies to Webcor/Obayashi Joint Venture Corporate EHS manager within 48 hours.

NOTE: Webcor/Obayashi Joint Venture EHS manager may assign all or some of these tasks to other responsible persons as appropriate.

Webcor/Obayashi Joint Venture Project Engineer (David Fields)
The Webcor/Obayashi Joint Venture Project Engineer assists the Webcor/Obayashi Joint Venture Project Manager with his/her responsibilities for construction management services for the project. This person will:

- Complete weekly jobsite safety audits
- Participate in pre-task planning, and subcontractor pre-bid, pre-construction, and/or kick-off meetings
- Assist with jobsite safety startup, safety orientations, and craft feedback luncheons
- Participate in fact finding, root cause analysis, and implementing corrective actions to prevent further occurrences on all injury/incident investigations
- Attend and/or participate in jobsite safety meetings

Webcor/Obayashi Joint Venture Supervisor/ Foremen (Michael Poole)
The Webcor/Obayashi Joint Venture Supervisor/Foreman will interface daily with his/her workers. Therefore, the Webcor/Obayashi Joint Venture Supervisor/Foreman will have a major influence on the effectiveness of the safety program and accident experience. Each Supervisor/Foreman's construction safety responsibilities will include:

- Training and instructing workers in safe work practices for all tasks to which they are assigned
- Helping ensure crew participation in pre-task planning
- Helping ensuring availability of and enforce the proper use of jobsite tools and PPE
- Monitoring the work area for unsafe acts and conditions and instituting immediate corrective action
- Setting a good example for workers
- Pre-planning activities to help ensure workers are properly trained in applicable safety requirements
- Conducting daily pre-job meetings to include review of day's activities and associated hazards
- Ensuring all injury reports are properly completed and submitted to Webcor/Obayashi Joint Venture EHS or designee

- Participating in fact finding, root cause analysis, and the implementation of corrective actions associated with injury/incident investigations, and providing information regarding these actions to Webcor/Obayashi Joint Venture Project Management/Regional Leadership
- Reporting and assisting with the resolution of near miss incidents
- Helping provide first aid care for injured workers
- Promoting and supporting Injury Free culture
- Leading tool box/tailgate safety meetings with the crew to:
- **Encourage participation**
- **Discuss observed accident trends and causes**
- **Plan construction safety into crew's work activities**
- **Take action to correct safety-related concerns**

Webcor/Obayashi Joint Venture Project Safety Coordinator (TBD)

The Webcor/Obayashi Joint Venture Safety Coordinator's primary responsibility is to ensure immediate corrective action of observed unsafe acts and unsafe conditions. This person will:

- Report unsafe acts and conditions to the worker's supervisor and/or safety coordinator for prompt corrective action and stop all life threatening situations immediately upon knowledge
- Orientate all new Webcor/Obayashi Joint Venture workers according to the Project Site-Specific Safety Orientation
- Make twice daily job site safety audits
- Facilitate daily safety coordination meetings with subcontractor safety coordinators (as applicable)
- Provide appropriate materials and conduct weekly tool box/tailgate meetings or safety meetings, as well as:
- **Review meeting reports for attendance**
- **Help implement required training programs for workers**
- Report, in writing to the project EHS manager the names of individuals and their supervisors who are continually observed to violate construction safety requirements, with copies to Webcor/Obayashi Joint Venture Project Management. Webcor/Obayashi Joint Venture Project Management may require that we remove these individuals and/or their supervisors from the job site. Also, Webcor/Obayashi Joint Venture Project Management and/or Webcor/Obayashi Joint Venture EHS is/are authorized to order a work stoppage until present unsafe conditions are abated.
- Report all injuries immediately to Webcor/Obayashi Joint Venture EHS Manager.
- Participate in fact finding, root cause analysis, and resolution on all injury/incident investigations
- Participate in completion and forwarding of all Injury Accident Investigation Packets (injury, liability, property damage, and the like) to Webcor/Obayashi Joint Venture Claims Manager.
- **Promote and support Injury Free culture.**
- **Keep on file the following:**
- **Updated chemical management plan, including chemical inventory lists and Material Safety Data Sheets (MSDSs) for all products used or stored onsite**

Subcontractor Responsibilities

A… The subcontractor has overall responsibility for accident prevention and implementation of this Webcor/Obayashi Joint Venture EHSP for anyone under their control, including their respective employees, vendors and suppliers. This responsibility is shared with the tiered subcontractors. .
Where subcontractor is not using Safety Professional(s)/Safety Coordinator(s) the subcontractor will assign safety responsibilities to a member of subcontractor Project Management. This assignment is subject to approval by Webcor/Obayashi Joint Venture Management and Webcor/Obayashi Joint Venture EHS, or designee. ***…A***

Subcontractors will submit a copy of their company's safety program prior to beginning work. All subcontractor workers must be orientated to their company's safety program as well as to applicable sections of this Webcor/Obayashi Joint Venture EHSP.
The subcontractor may be responsible for providing their Safety Professional(s)/Safety Coordinator(s) or designee with a reliable communication method or device in order to contact Webcor/Obayashi Joint Venture Project Management and Webcor/Obayashi Joint Venture EHS during emergency response and/or other safety related communications.
Although many existing hazards may be corrected through informal communications between the subcontractor's Safety Professional/Safety coordinator or designee and members of Webcor/Obayashi Joint Venture Project Management, all corrective actions must be documented, with copies forwarded to Webcor/Obayashi Joint Venture Project EHS Manager.

Subcontractor's Project Manager

The subcontractor's Project Manager is responsible for:

- **Planning and monitoring all work performed for compliance with the objectives of the Webcor/Obayashi Joint Venture EHSP, subcontractor's safety program, and federal, state and local safety and health regulations**
- **Authorizing immediate correction of any existing construction safety-related concerns**
- **Fully supporting the designated Safety Coordinator and cooperating with all designated project safety personnel in obtaining corrective actions necessary to comply with the Webcor/Obayashi Joint Venture EHSP**
- **Completing weekly safety audits**
- **Participating in pre-task planning and subcontractor kick-off meetings**
- **Participating in fact finding, root cause analysis, and resolution on all injury/incident investigations**
- **When requested, attending special construction safety meetings**

Subcontractor Superintendent/Supervision/Foremen

All supervisory personnel shall have as a minimum the OSHA 30 Hour Construction Safety training within the prior four years and possess a current CPR /First Aid and AED certification. In addition

supervisory personnel shall have at a minimum 5 years' experience as a superintendent in a similar type of project. Responsibilities of Subcontractor Superintendent/Supervisor/Foremen are the same as Webcor/Obayashi Joint Venture Superintendent/Supervisor/Foremen, plus:

- **Attending weekly contractors' safety meetings**

Subcontractor's Safety Professional

A…* DELETED *…A

This person will:

- **Report all incidents and injuries immediately to Webcor/Obayashi Joint Venture Project Management and Webcor/Obayashi Joint Venture EHS**
- **Perform continuous safety audits of all their respective trade contractors and their subcontractors' work areas throughout the entire workday and take immediate action to eliminate all unsafe acts and/or conditions. These observations, along with corrective actions taken will be reported to the appropriate member of Webcor/Obayashi Joint Venture Project Management, the subcontractor's own management, and Webcor/Obayashi Joint Venture EHS, using the SafeSiteOne Safety Inspection Report. These forms will be completed daily and submitted to Webcor/Obayashi Joint Venture Project Management/EHS.**
- **Serve as technical advisors to their project management team on safety and health planning, training and problem resolution issues.**
- **Ensure that prior to the commencement of any work activity; every Supervisor/Foreman reviews each task assignment with every affected employee to ensure a comprehensive understanding of the safety requirements and precautions to be followed while performing this work. The Safety Professional(s) and Supervisor/Foremen should further ensure that all of the necessary guards are in place, safety equipment is provided, and other required steps are taken prior to starting the work.**
- **Each Safety Professional has the right and the authority to direct stoppage of any work of any contractor whenever imminent danger to life and health exists.**
- **Each Safety Professional has the right and authority to stop any and all hazardous work activities being performed by his/her company or their subcontractors until necessary corrective actions are taken.**
- **Ensure that appropriate personal protective equipment is provided and its use enforced**
- **Enforce their company's safety program and disciplinary procedures**
- **Accompany Webcor/Obayashi Joint Venture's supervisory personnel as directed and perform joint inspections of work areas and activities**
- **Orient all new subcontractor personnel to the site's safety program prior to work commencement**
- **Complete and forward all claim forms (injury, liability, property damage, and the like).**
- **Attend and participate in daily Safety Coordination Meetings**

- **Participate in accident investigations and recommend proper courses of corrective action. When serious accidents occur, this task will be performed in conjunction with Webcor/Obayashi Joint Venture EHS and Webcor/Obayashi Joint Venture and the subcontractor Project Management or their representatives.**
- **Provide appropriate materials for those conducting weekly tool box/tailgate meetings or safety meetings, as well as:**
    - **Review safety meeting reports for attendance**
    - **Attend and periodically conduct tool box/tailgate meetings to evaluate their effectiveness**
    - **Implement required safety training programs for subcontractor employees and supervisors**

No full time Safety Professional shall be assigned any duties other than assuring the safety and health of the personnel employed by their company or their subcontractors.

Subcontractor's Safety Coordinator

The subcontractor's Safety Coordinator's responsibilities include assuring immediate corrective action to eliminate observed unsafe acts and unsafe conditions. This person will:

- **Report all incidents and injuries immediately to Webcor/Obayashi Joint Venture Project Management/EHS.**
- **Orient all new subcontractor personnel to the site's safety program prior to work commencement**
- **Make daily job site safety observations/audits (to be documented daily) and provide copies of documentation to Webcor/Obayashi Joint Venture Project Management and Webcor/Obayashi Joint Venture EHS**
- **Complete and forward all claim forms (injury, liability, property damage, and the like).**
- **Attend and participate in daily safety coordination meetings**
- **Participate in accident investigations and recommend proper courses of corrective action. When serious accidents occur, this task will be performed in conjunction with Webcor/Obayashi Joint Venture Project Management/EHS and subcontractor Project Management or their representatives.**
- **Provide appropriate materials for those conducting weekly tool box/tailgate meetings or safety meetings, as well as:**
    - **Periodically conduct tool box/tailgate meetings**
    - **Implement required training programs for workers and supervisors**
    - **Provide necessary information for the obtaining of motor vehicle records for all crane operators on site**

Everyone's Responsibilities

- Report injuries ***immediately*** to supervision
- Work according to good safety practices as posted, instructed and discussed
- Comply with Webcor/Obayashi Joint Venture EHSP and subcontractor's safety program
- Use all required safety devices
- Report any unsafe situation or act to supervisor and/or designated Safety Coordinator/designee immediately (unsafe conditions and acts must be corrected when noticed to effectively prevent accidents)
- Maintain a clean and safe work area
- Come to work alert and free of any impairment that may affect safety
- Follow the site's Safe Work Practices
- Promote and support the Injury Free Environment: Agree to be held accountable for your safety, and the safety of others
- In addition, EVERYONE is held accountable for their designated assignments of responsibilities as denoted in their respective definitions; i.e., Project Manager, Superintendent, etc.
- Refrain from performing any work which may feel unsafe or for which proper equipment and/or training have not been provided

SAFETY DISIPLINARY POLICY

Under Webcor/Obayashi Joint Venture, all employees are required to follow company safety policies and operating procedures. When needed, employees will be provided with additional training and information, or retraining to maintain their knowledge.

Although Webcor/Obayashi Joint Venture reserves the right to discharge "at will," we believe that employees found performing work in an unsafe manner that would endanger the employee or another employee shall be subject to discipline or termination by management. Webcor/Obayashi Joint Venture strictly maintains a zero tolerance policy towards violations involving, but not restricted to: fall protection, lock-out/tag-out, and confined space.

The Webcor/Obayashi Joint Venture Project Management/Site Safety Manager will determine the course of action best suited to the circumstances. The steps to be taken at a minimum shall include the following:

- *Verbal Warning* – As the first step in correcting unacceptable behavior, the Supervisor shall review the pertinent facts with the employee. The Supervisor will consider the severity of the problem, and the employee's past performance. A verbal warning will be issued to the employee, if necessary; the employee will be placed on probation.

- *Written Warning* – If the unacceptable performance continues, the next step will be a written warning. The written warning will clearly state the safety policy that was violated. Probation will be a part of the written warning. It may also include time off without pay. At the completion of the probationary period, the supervisor will meet with the employee to determine if the employee has achieved the required level of performance.

- *Termination* – The employee may be terminated if he does not improve his performance while on probation, or has violated another company safety policy within twelve months.

LADDER SAFETY RULES

General:

- Inspect before use for physical defects.
- Ladders are not to be painted except for numbering purposes.
- Do not use ladders for skids, braces, workbenches, or any purpose other than climbing.
- When you are ascending or descending a ladder, do not carry objects that will prevent you from grasping the ladder with both hands.
- Always face the ladder when ascending and descending.
- If you must place a ladder over a doorway, barricade the door to prevent its use and post a warning sign.
- Only one person is allowed on a ladder at a time.
- Do not jump from a ladder when descending.
- All joints between steps, rungs, and side rails must be tight.
- Safety feet must be in good working order and in place.
- Rungs must be free of grease and/or oil.

Stepladders

- Do not place tools or materials on the steps or platform of a stepladder
- Do not use the top two steps of a stepladder as a step or stand.
- Always level all four feet and lock spreaders in place.
- Do not use a stepladder as a straight ladder.

Straight type or extension ladders

- All straight or extension ladders must extend at least three feet beyond the supporting object when used as an access to an elevated work area.
- After raising the extension portion of a two or more stage ladder to the desired height, check to ensure that the safety dogs or latches are engaged.
- All extension or straight ladders must be secured or tied off at the top.

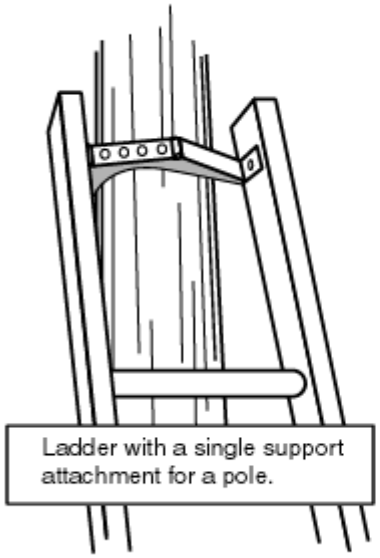

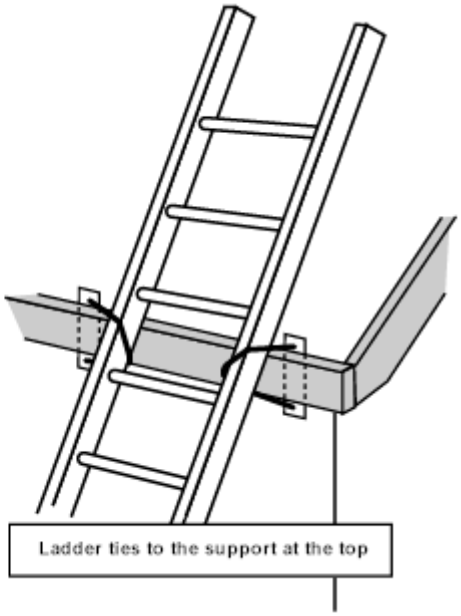

- All ladders must be equipped with safety (non-skid) feet.

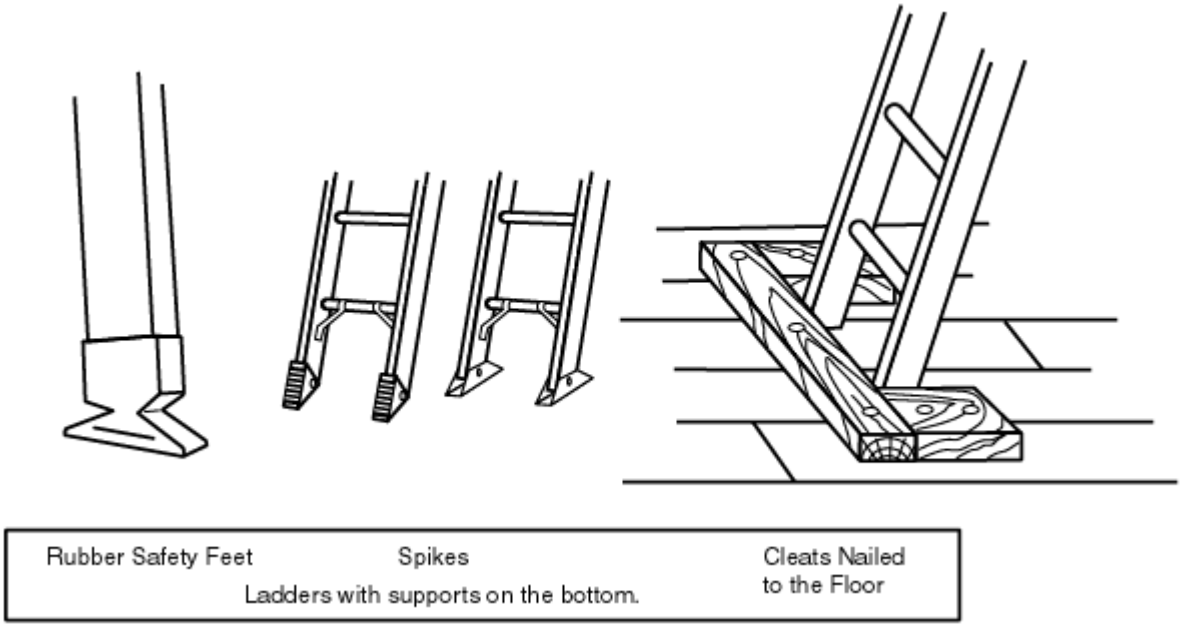

- Portable ladders must be used at such a pitch that the horizontal distance from the top support to the foot of the ladder is about one-quarter of the working length of the ladder.

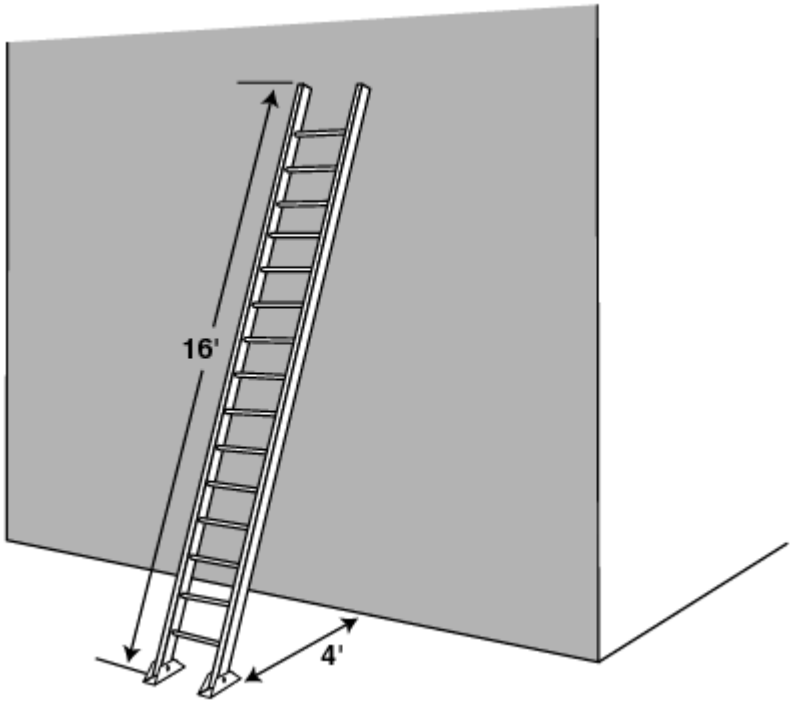

GENERAL MATERIALS HANDLING SAFETY

General material storage safety:

- Make sure that all materials stored in tiers are stacked, racked, blocked, interlocked, or otherwise secured to prevent sliding, falling, or collapse.
- Post conspicuously the maximum safe load limits of floors within buildings and structures, in pounds per square foot, in all storage areas, except for floor or slab on grade. Do not exceed the maximum safe loads.
- Keep aisles and passageways clear to provide for the free and safe movement of material handling equipment or employees. Keep these areas in good repair.
- Do not store materials on scaffolds or runways in excess of supplies needed for immediate operations.
- Use ramps, blocking, or grading when a difference in road or working levels exists to ensure the safe movement of vehicles between the two levels.
- Do not place materials stored inside buildings under construction within 6 feet of any hoist way or inside floor openings, or within 10 feet of an exterior wall which does not extend above the top of the material stored.
- Segregate non-compatible materials in storage.
- Stack bagged materials by stepping back the layers and cross-keying the bags at least every ten bags high.
- Carefully handle cement and lime delivered in paper bags to prevent the bags from bursting.
- Do not pile cement and lime bags more than ten bags high except when stored in bins or enclosures built for the purpose of storage.
- When bags are removed from the pile, keep the length of the pile at an even height and maintain the necessary step backs every five bags.
- When handling cement and lime bags, wear eye protection preventing any contact with the substance (such as goggles or other sealed eye protection) and wear long sleeve shirts with close fitting collar and cuffs.
- Do not wear clothing that has become hard and stiff with cement.
- Make sure to report any susceptibility of skin to cement and lime burns.
- Make sure that a hand cream or Vaseline and eyewash is provided and kept ready for use to prevent burns.
- Store lime in a dry place to prevent a premature slacking action that may cause fire.
- Do not stack bricks more than 7 feet high. When a loose brick stack reaches a height of 4 feet, taper it back 2 inches for every foot of height above the 4-foot level.
- Never stack bricks, for storage purposes, on scaffolds or runways.
- Always stack blocks; do not throw in a loose pile.
- When stacking masonry blocks higher than 6 feet, taper back the stack one-half block per tier above the 6-foot level.
- When stacking inside a building, distribute the piles to prevent overloading the floor.
- Do not drop or throw blocks from an elevation or deliver blocks through chutes.
- Do not stack lumber more than 20 feet high; if handling lumber manually, do not stack more than 16 feet high.
- Remove all nails from used lumber before stacking.
- Stack lumber on level and solidly supported sills, and such that the stack is stable and self-supporting.

- Stack stored lumber on timber sills to keep it off the ground. Sills must be placed level on solid supports.
- Place cross strips in the stacks when they are stacked more than 4 feet high.
- If not racked, stack and block structural steel, poles, pipe, bar stock, and other cylindrical materials as to prevent spreading or tilting.
- Wear heavy gloves when handling reinforcing steel.
- When bending reinforcing steel on the job, use a strong bench set up on even dry ground or a floor to work on.
- Carefully pile structural steel to prevent danger of members rolling off or the pile toppling over.
- Keep structural steel in low piles, giving consideration to the sequence of use of its members.
- Stack corrugated and flat iron in flat piles, with the piles not more than 4 feet high; place spacing strips between each bundle.
- Frequently inspect stock piles of sand, gravel, and crushed stone to prevent their becoming unsafe by continued adding to or withdrawing from the stock.
- Do not remove frozen material in a manner that would produce an overhang.

General Rigging Equipment Safety:

- Inspect rigging equipment for material handling prior to use on each shift and as necessary during its use to ensure that it is safe. Remove defective rigging equipment from service.
- Never load rigging equipment in excess of its recommended safe working load.
- Remove rigging equipment when not in use from the immediate work area so as not to present a hazard to employees.
- Mark special rigging accessories (i.e., spreader bars, grabs, hooks, clamps, etc.) or other lifting accessories with the rated capacity. Proof tests all components to 125% of the rated load prior to the first use. Maintain permanent records on the job site for all special rigging accessories.

Disposal of waste materials:

- Whenever materials are dropped more than 20 feet to any point lying outside the exterior walls of the building, use an enclosed chute of wood or equivalent material.
- When debris is dropped without the use of chutes, make sure that the area onto which the material is dropped is completely enclosed with barricades at least 42 inches high and 20 feet back from the projected edge of the opening above. Post at each level warning signs of the hazard of falling materials. Do not remove debris in this lower area until debris handling ceases above.
- Remove all scrap lumber, waste material, and rubbish from the immediate work area as the work progresses.
- Make sure to comply with local fire regulations if disposing of waste material or debris by burning.

- Keep all solvent waste, oily rags, and flammable liquids in fire-resistant covered containers until removed from the work site.

FIRE PREVENTION PROGRAM

Purpose:

To reduce to a minimum the possibility of fire damage and associated losses incurred during the construction of the Project.

The following program, by no means complete, is the guide to be used on the Project to aid in preventing the spreading of materials loosed by fires and gases associated with combustion, etc.

Fire Protection

- All temporary electric service, equipment, and wiring must be in accordance with **Cal OSHA and NFPA 70, National Electric Code (NFPA 241, Section 4-1.1).**
- Storage of any material within 10 feet of fire hydrants is strictly prohibited.
- Work areas shall be policed on a regular basis to prevent accumulation of material. All combustible waste material, dust, and debris shall be removed from the building and its immediate vicinity at the end of each work shift, or more frequently as necessary, for Safe operations **(NFPA 241, Section 3-4.1).**
- No motors or machinery shall be left running during nonworking hours except as specifically directed by Webcor/Obayashi Joint Venture.
- All heating equipment shall have necessary Safety devices and shall be wired, piped, and operated according to all applicable codes, rules and regulations, and manufacturers' instructions.
- All tarps and blankets shall be of fire-retardant material.
- All fuel and solvent containers shall be in approved containers and placed on drip pans. Storage of these materials shall be in accordance with product Material Safety Data Sheets, statutory Hazardous Material requirements, and Fire Department requirements.
- No open or burning fires shall be permitted onsite. Anyone doing so will be subject to immediate dismissal.
- No solid fuel shall be permitted on the site.
- Fire extinguishers shall be placed and maintained on the job in conspicuous and identified locations **per Cal/OSHA Title 8 Construction Safety Orders, Article 36, Section 1922, (a), (1). These fire extinguishers shall not be moved or discharged, except for fighting a fire. Anyone discharging an extinguisher as a prank will be subject to immediate dismissal.**
- All gas bottles, such as propane, oxygen, and acetylene, shall be stored and secured in a vertical position in areas designated by Webcor/Obayashi Joint Venture. All stored bottles shall be capped. Oxygen and acetylene will not be stored within 20 feet of each other or must be separated by a one-half-hour-rated fire barrier. At no time during construction shall propane or LPG be stored inside of a structure or building.
- All oxygen and acetylene in use shall be in proper carts with required separations and with an attached 10 BC, minimum, fire extinguisher.
- During welding or cutting operations, a fire watch with fire extinguisher will be required and shall be the responsibility of the subcontractor or its sub-subcontractor performing the work. The need of a hot work permit may be needed, depending on location and circumstances for such. Permits will be obtained from the Project Safety Manager.

Fire Fighting

- Appropriate action is the key to the prevention of loss of life and property damage. This action in the first minute is worth gallons of water ten minutes later.
- If a fire occurs, notify the local fire department and Webcor/Obayashi Joint Venture immediately.
- Extinguish fire with a noncombustible, such as sand, or an available fire extinguisher.
- Remove or shut off fuel supply, such as removing debris or stored material, or shutting off fuel supply.

Welding and Cutting Permit Program for "Hot Work"

- The Site Safety Manager will act as the Fire Safety Manager.
- Each subcontractor shall notify Webcor/Obayashi Joint Venture of proposed "Hot Work" through a "Welding/Cutting Permit" application to the Fire Safety Manager.
- The Fire Safety Manager shall review the Permit form with the subcontractor to assure that all areas of concern are accounted for in fire protection.
- The Fire Safety Manager shall keep a log of all Permits.
- Permissible Areas:
  - New construction: When all fire prevention measures are taken, permits shall be authorized for the work.
    - New construction work shall require the presence of a dedicated fire extinguisher (20 lb, ABC), provided by the subcontractor performing the work, and any other preventive measures as may be necessary for protection of life and property, such as fire blankets, water supply, etc.
    - The subcontractor and the Fire Safety Manager shall ensure that the surrounding area(s) are free of combustible material per NFPA 51B.
    - When the work is of the nature that "hot" material may fall to areas below, the subcontractor and the Fire Safety Manager shall ensure that those areas are free of combustible material or material that may otherwise be damaged. Work in place must be protected by the subcontractor performing the work.
    - When "Hot Work" is performed in Permit Required Confined Spaces, the applicable Standards will be followed for Permit Required Confined Space work.
    - "Hot Work" shall not be performed near fuel storage areas or other areas where combustible vapors may accumulate.
  - Occupied Buildings: "Hot Work" shall not be performed in occupied buildings without notification of the local Fire Department responding agency (local Engine Company).
    - The fire suppression system for the building must be in operation.
    - The appropriate Building or Department Managers must be notified and the work coordinated with their operations.
    - Preparation for the work and clearing of combustible materials shall be in accordance with NFPA 51B. Combustible material shall be cleared from the work area by a distance of 35 feet.

Office, Tool Sheds, Etc.

- Shall be constructed of fire-resistive materials and heated with approved fire-safe heating devices in accordance with manufacturers' instructions.
- Shall be separated from materials which present extraordinary fire hazards in accordance with NFPA 241, 241, Table 2-1.1).

- Shall be equipped with a minimum of one 20-lb. ABC fire extinguisher each, in accordance with Cal/OSHA Title 8 Construction Safety Orders, Article 36, Section 1922, (a), (1).
- Shall have a 40-gallon waste container adjacent to it.
- Shall not be used to store oily rags, oily clothes, or fuels.

The principles outlined above should provide a reasonable change for a fire-free job. Strict adherence to the intent of this program is to be considered a contractual requirement. (See attached appendix for Hot Work Permit.)

APPENDIXES

ASBESTOS ABATEMENT PROGRAM

THE CHARACTERISTICS OF ASBESTOS

There are no visible signs that asbestos is particularly hazardous. Also, no immediate side effects are experienced by workers after exposure. But this common mineral can cause lung disease, cancer and even death if not handled safely. This is why the Standard requires that workers who don't really work directly with asbestos, but who may have incidental exposure, must receive at least "Asbestos Awareness" training.

To help address OSHA's concerns, and provide the awareness training needed by employees under the regulation, this program is designed to present fundamental information.

Employees should understand how long-term exposure to asbestos can harm the human body. Employees should recognize the areas where asbestos may be located in their project.

Employees should know which asbestos and asbestos-containing materials should be repaired and/or removed.

Employees should understand how to avoid potential hazardous maintenance and custodial activities that could lead to asbestos exposure.

Employees should know what personal protective equipment to use to protect against asbestos exposure.

Employees should understand which safe work practices should be used when helping with a minor asbestos clean-up.

Employees should understand why, when there is the potential for exposure to asbestos, air monitoring and medical surveillance can be important elements in providing a safer workplace.

Employees should be familiar with certain requirements in the OSHA Asbestos Standard…especially those concerning workplace controls and personal protective equipment.

Outline of Major Program Points
The following outline summarizes the major points of information employees should be familiar with.

- Asbestos is a mineral which has many positive qualities. It is:
    - Fireproof.
    - Heat resistant
    - Lightweight.
    - Resistant to most chemicals.
    - Sound-absorbing.
    - And it does not conduct electricity.

- Products that contain Asbestos can be helpful, but they can also be very harmful.
- Asbestos has hidden dangers that you need to know about.
- While most rocks break down into tiny particles, like grains of sand… Asbestos breaks down into small fibers, like strands of rope.
    - These fibers are invisible to the human eye.
    - You need a powerful microscope to see them.
    - These fibers have the strength of steel.
- The biggest problem when dealing with Asbestos fibers is that you cannot:
    - See them.
    - Taste them.
    - Smell them.
- If Asbestos fibers enter your body, they can cause severe damage.
- Asbestos has been used throughout the building and construction industry. It was:
    - Mixed with plaster and wallboard for strength and support.
    - Sprayed onto wall, ceilings, and steel girders for fireproofing.
    - Wrapped around pipes, boilers and heating ducts for insulation.
    - Even in floor and ceiling tiles.
- Several types of workers need to know about the hazards of working with or near Asbestos:
    - Custodial.
    - Engineering.
    - Maintenance.
- Asbestos hazards are so serious that OSHA has issued a Standard requiring that employees be:
    - Trained
    - Monitored.
    - Protected.
- As part of the training in this program, you will learn:
    - The health risks and effects of long-term Asbestos exposure.
    - How to recognize and deal with possible Asbestos hazards.
    - The content of your employer's Asbestos Management Plan.
- Asbestos fibers can float in the air for long periods of time, and can be easily inhaled.
    - They can cause severe damage to the lungs.
    - Yet in most instances there are not any immediate side-effects.
- This exposure to Asbestos fibers can lead to a disease known as "Asbestosis."
    - It can cause shortness of breath.
    - It may cause enlargement of the heart.
    - In extreme cases, it can even cause death.
- Long-term exposure to Asbestos fibers can also lead to cancer.
- People who smoke are especially vulnerable to Asbestos.
    - Cigarette smoke breaks down the lungs' defensive system, and leaves them vulnerable to Asbestos fibers.
    - Smokers are over 50 times more likely to become sick after long-term exposure to Asbestos.
- Some of the ways to reduce your exposure to Asbestos including knowing:
    - Where it is located in your work areas.

    - How to recognize potential problems.
    - What to do if you find damaged Asbestos materials.
- If Asbestos-Containing materials are located in your workplace, your facility will have an Asbestos Management Plan.
    - The plan will contain a list of Asbestos materials.
    - There should also be a sign o a label at each location to warn you about Asbestos.
    - Notify your supervisor if there is not a sign where Asbestos may be present.
- Asbestos materials that you may encounter generally fit into two categories:
    - Friable.
    - Non-Friable.
- "Friable" Asbestos material can be easily damaged or broken:
    - This can release dangerous fibers into the air.
- "Non-Friable" material is not damaged as easily, but can also release asbestos fibers.
- The three most common materials that contain Asbestos are:
    - Thermal system insulation.
    - Floor tiles.
    - Sprayed-on materials.
- Thermal system insulation is the most common type of friable Asbestos material, and can be found on:
    - Boilers.
    - Utility pipes.
    - Ductwork.
    - Heating systems.
- Keep a look-out for possible problems with this Asbestos material.
    - Even a small tear in the insulation is a potential hazard
- If you encounter damaged insulation, minimize the chance of exposure by acting immediately.
    - Secure the area, even if you are not sure that the material contains Asbestos.
    - Post a warning sign.
    - Notify your supervisor, your facility's environmental manager or an outside company (if appropriate).
- If you cannot fix the situation immediately, you may be asked to temporarily patch the damaged area.
    - Before starting work, put on appropriate personal protective equipment.
    - This may include gloves, a respirator and disposable overalls.
    - Wrap the damaged material with strong plastic.
    - Secure it with duct tape.
- The professionals will find a more permanent solution.
    - When they arrive, keep clear and let them do their work.
- Never handle or remove any Asbestos material unless authorized and properly equipped.
    - If Asbestos material needs to be removed, first talk to your supervisor to find out who in your facility is qualified.
- Floor tiles, as well as the glue used to stick the tiles to the ground, can also contain Asbestos.
    - Although floor tiles are non-friable, if they are damaged they can still release fibers.
    - Look for cuts, grooves or cracks in the material.
    - If you notice damage, seal off the area and notify your supervisor.

    - Do not grind, cut or break apart floor tiles, since this could release fibers.
- If you need to strip a floor's finish, use the "Wet Method."
    - Dampen the floor so fibers are less likely to become airborne.
    - Use a Low Abrasion Pad, at speeds of less than 300 rpm, for safe cleaning.
- Ceiling tiles may also contain Asbestos.
    - Be careful when changing light bulbs or replacing tiles.
    - Look for broken corners or other damaged areas.
    - Both are signs that the tiles may be releasing fibers.
- Asbestos may also be found sprayed onto ceilings and walls.
    - They are friable materials.
    - They must be handled with extreme caution.
- Sprayed on materials can also peel away from a surface, and the dust and debris could contain Asbestos.
    - Do not sweep or shovel material while "dry."
    - This stirs up fibers into the air where they can be inhaled.
    - Report the problem to your supervisor, who will arrange for clean-up and disposal.
- Depending on the job, you may be asked to assist in the repair or removal of Asbestos at your facility.
    - Make sure that you use proper personal protective equipment.
    - Although Asbestos is not a skin contact hazard, by wearing disposable overalls your decontamination will be much easier.
- You will also need to wear a respirator fitted with special filters, to help prevent you from inhaling fibers.
    - The respirator must be the right size and shape for your face.
    - "Fit test" the respirator to prevent gaps between your face and the mask, so Asbestos fibers cannot "leak" through.
    - You'll be trained to clean and maintain your respirator, as well as how and when to change the filters.
- When cleaning up any Asbestos-Containing materials, never use an ordinary vacuum.
    - Even a shop-grade vacuum will send fibers into the air.
    - Vacuums used for Asbestos clean-up must be fitted with special HEPA filters.
    - These "High Efficiency Particulate" fibers prevent the release of Asbestos fibers into the air.
- Remember to use the "wet method" during clean-up activities.
    - Make sure the Asbestos is wet before, during and after handling, even if a HEPA vacuum is used.
    - After any clean-up, "wet wipe" the area with a damp cloth.
    - Be sure to dispose of the cloth properly.
- Asbestos materials must be properly bagged and labeled.
    - Use only official "Asbestos Disposal Bags" for this purpose.
    - When labeling a bag, use a "Generator Label" which lists the name and address of your facility.
- If an Asbestos Disposal Bag becomes torn, seal it immediately with tape.
    - Place the damaged bag inside a new bag and reseal it.
    - Place a Generator label on the new outer bag.
    - Remember, Asbestos is a regulated waste (it must be hauled to a licensed landfill).

- When helping with an Asbestos cleanup, you may be asked to wear an Air Sampling Device.
    - It measures the airborne concentration of Asbestos fibers in your work area.
    - An air pump is strapped to your waist, and a sampling cassette is taped to the front of your shoulder.
    - After you turn in the cassette, the air sample is analyzed for Asbestos content.
- After any work with Asbestos materials, you must decontaminate yourself and your equipment.
    - This prevents the spread of Asbestos dust and debris.
    - Always use an official decontamination area.
    - It should be equipped with a HEPA vacuum, as well as a plastic drop cloth (to contain any loose fibers).
- Never eat, drink or smoke in these decontamination areas, or any other area where Asbestos is present.
    - This increases your chance of inhaling fibers.
- When decontaminating your clothing, never brush off dust or debris.
    - This sends Asbestos fibers into the air.
    - Use a HEPA vacuum to remove these materials from your clothing before taking it off.
    - Also vacuum your equipment and Asbestos Disposal Bags.
- Remember that your overalls will be contaminated, and must be disposed of as a regulated waste.
    - Seal them in as Asbestos Disposal Bag.
- Scrub your hands and face with soap and water before leaving work.
    - If possible, shower before leaving your facility as well.
    - If not, shower immediately when you get home.
    - This prevents exposure to your family or friends.
- To provide an additional safeguard, you may be asked to participate in a Medical Surveillance Program.
    - This makes certain that you are not exposed to dangerous amounts of Asbestos.
    - It will also verify that you can safely wear a respirator.
- To provide an additional safeguard, you may be asked to participate in a Medical Surveillance Program.
    - This makes certain that you are not exposed to dangerous amounts of Asbestos.
    - It will also verify that you can safely wear a respirator.
- The Medical Surveillance Program requires regular visits to a doctor.
    - You may be asked to take a “breathing capacity” test, or have X-rays taken of your lungs.
    - This is provided free of charge.
    - If you have any questions, consult with your supervisor.
- A review of the most important points of the program:
    - Asbestos may be a hidden danger, but it is not hard to find ways to protect yourself.
    - Know where Asbestos is located in your facility, and check your Asbestos Management Plan.
    - Inspect all Asbestos locations at least twice a year.
    - Record the results of these inspections in an Asbestos Log Book for future reference.
    - Do not disturb Asbestos-Containing materials unless absolutely necessary.
    - Take steps to prevent contamination during operations involving Asbestos.
    - Always remember to decontaminate after coming into contact with any Asbestos material.

LEAD ABATEMENT PROGRAM

This program has been put in place because Webcor/Obayashi Joint Venture recognizes that some of the work we do has the potential to expose our employees to lead. We want to do as much as is practically possible to protect them from lead exposure.

Prior to the start of a project, professionals/Industrial Hygienist in lead detection and abatement will be brought in to do an exposure assessment to determine whether the work environments Webcor/Obayashi Joint Venture employees will be operating in have the potential to expose them to lead. These professionals will be used to give Webcor/Obayashi Joint Venture direction as to how to proceed. It will be our goal to have lead abatement taken care of by licensed lead abatement professionals prior to the arrival of Webcor/Obayashi Joint Venture employees.

To help address OSHA's concerns and provide the lead awareness training needed by employees, this program is designed to present fundamental information.

Lead can be found in a number of workplace environments. Until recently, lead was a common component in paints of all kinds (which can create exposure whenever sanding, "sandblasting," scraping, or even demolition occurs).

Workplace experience and empirical studies have shown that lead is fairly easily absorbed into the body. Breathing airborne lead dust and fumes is the most common route of entry. Lead can also be absorbed if it comes into contact with the mouth or tongue.

Overexposure to lead can occur both on an "acute" basis, where large amounts of lead are absorbed into the body in a short period of time, or on a "long-term" basis where small amounts of lead are absorbed at any one time, eventually accumulating to cause significant health problems.

On May 4, 1993, OSHA published the Interim Final Rule for Lead Exposure in Construction. The Construction Standard establishes "Interim" procedures and work practices that must be followed in construction environments. The OSHA Standard and its compliance requirements are included at the end of this written program. The Lead Standards are "performance based"; the standard will tell you what you have to accomplish.

There is really only one General Requirement in the Lead Standards. This requirement also essentially defines the objectives of the standards as far as OSHA is concerned. That is:

- Employers must make sure that no employee is exposed to lead concentrations greater than 50 micrograms per cubic meter of air, averaged over an eight-hour period in any 24-hour day.

The rest of the standard addresses how to accomplish that goal.

Typically, OSHA requires that you use the following methods to protect your employees:

- Engineering controls.
- Work-practice controls.
- Respiratory protection.
- Personal protective clothing and equipment other than respirators.
- Hygiene facilities and practices.
- Housekeeping.
- Employee information and training.

OSHA requires that every employer who is covered by these Standards provide "Information and Training." For employers in the Construction Industry, it requires that they meet the training requirements of the Hazard Communication Standard ("Right To Know"). Information that must be given employees under the Hazard Communication Standard includes:

- The hazards associated with lead exposure.
- Warning signs and labels that can be found on materials containing lead.
- How to find information about materials containing lead on Material Data Safety Sheets (MSDS).
- Use of personal protective equipment.

THE WRITTEN COMPLIANCE PROGRAM

Prior to the start of a project, professionals/Industrial Hygienist in lead detection and abatement will be brought in to do an exposure assessment to determine whether the work environments Webcor/Obayashi Joint Venture employees will be operating in have the potential to expose them to lead. This policy will be an overall policy with each subcontractor contributing their specific plan as they come on board to the project.

These professionals will give Webcor/Obayashi Joint Venture direction as to how to proceed. It will be our goal to have lead abatement taken care of by licensed lead abatement professionals prior to the arrival of Webcor/Obayashi Joint Venture employees.

INCIDENT REPORTING INSTRUCTIONS

☐ 1. Ensure the safety and security of the individual(s) that were injured or involved, other people on site, the public and the project.

☐ 2. If this is a 911 emergency consult your Crisis Management Plan.

☐ 3. All incidents requiring clinic visits contact Danielle DiRicco at 510-476-2578 or 650-520-4251.

☐ 4. Take photos of the incident scene and surrounding area immediately. Include these photos in the investigation report. Please number, date, use arrows to indicate specific targets, etc.

☐ 5. Contact your Area Safety Director/Manager.

☐ 6. For Webcor/Obayashi Joint Venture Field and Salaried employees complete the entire Incident Investigation Packet thoroughly. The DWC1 form will need to have signatures by both the employee and employer and a copy of the signed form must be given to the employee. You have a maximum of 24 hours to complete the packet. Send all forms via email or fax to Danielle DiRicco at fax number 510-476-3066.

☐ 7. For Subcontractor injuries complete the following forms. You have a maximum of 24 hours to complete the forms. Send all forms via email or fax to Danielle DiRicco at fax number 510-476-3066.

a. Incident Investigation Packet
b. Injured Worker's Statement
c. Supervisor's Statement
d. Witness Statement

☐ 8. Before leaving the doctor's office, obtain the **Physician's Release/Work Status and the Job Analysis/Work Recommendations Report** from the clinic/hospital doctor after each doctor's visit via email or fax to Danielle DiRicco at 510-476-3066.

☐ 9. Provide training certificates, orientation documentation, Job Hazard Analysis for this specific task to include in the Incident Investigation Packet.

☐ 10. Contact your Area Safety Director/Manager if the injured worker must be hospitalized over twenty-four (24) hours for more than observation. OSHA must be contacted within eight (8) hours of the incident by the Area Safety Director/Manager or designated person.

☐ 11. In the event an incident results in a recordable, lost time or near miss a Root Cause Analysis (RCA) shall be performed. The RCA will be scheduled by the Area Safety Director/Manager and participation by the designated project team members is required. See attached Root Cause Analysis instructions.

INCIDENT INVESTIGATION REPORT FORM

#1 Employer Information:

Company Name: _____ WC Policy Number: _____

Mailing Address: _____

Nature of Business (type of contractor):_____

Job Site Name: _____ Project Number: _____

Job Site Address: _____

#2 Employee Information:

Employee Name: _____

Address: _____

Street Address City State Zip Code

Social Security Number: _____-_____-_____ ☐ Male ☐ Female

Phone Number: (___) _____ Date of birth: ____/____/____ Date hired: ____/____/____

Job Title: _____

Employee usually works: _____hours per day, _____days per week, _____ total weekly hours

Employment Status: ☐ Full Time ☐ Part Time ☐ Temporary ☐ Seasonal

Gross wages/salary: $_____ per _____

#3 Injury / Illness Information

Date of Incident: _____ Day of Week: _____Time of Incident: _____

Time Employee Began Work: _____If Employee Died, Date of Death: _____

Type of Injury: _____ Part of body injured: _____

Exact Location of Incident (Bldg. Level/Area): _____

Employee's Direct Supervisor: _____Were they working on a crew? ☐ Yes ☐ No

PPE worn at time of incident (list):_____

Were other workers injured in this event? ☐ Yes ☐ No

Date reported to Webcor/Obayashi Joint Venture: _____, to whom: _____

Was the employee taken to a medical facility offsite? ☐ Yes ☐ No Date: _____

Treating Facility & Phone Number: _____

INCIDENT INVESTIGATION REPORT FORM (continued)

Physician's Name: _____

Employee Returned to: ☐ Regular Work ☐ Modified Work If not, estimated return date: _____

Were they unable to work for at least one day after date of injury? ☐ Yes ☐ No

Date Last Worked: _____ Date Returned to Work: ____ is employee still off work? ☐ Yes ☐ No

Was the employee paid full wages for date of injury or last day worked? ☐ Yes ☐ No

Is the employee's salary being continued? ☐ Yes ☐ No

Equipment, materials and chemicals the employee was using when event or exposure occurred (i.e., Acetylene, welding torch, tractor, scaffold)? _____

_____

_____

_____

_____

_____

General activity at time of incident (i.e., concrete)? _____

_____

_____

_____

_____

Specific task at time of incident (i.e., Finishing)? _____

_____

_____

_____

_____

INCIDENT INVESTIGATION REPORT FORM (continued)

#4 Description of the Incident (not to be completed by injured worker):
NOTE: This does not take the place of a witness Statement. Describe in detail the circumstances of the incident (attach diagrams, drawings and/or photos of accident scene). Give a chronological sequence of events. If materials and/or equipment were involved, start before the materials/equipment was brought to the incident scene describing who, what, where, when, how:
_____
_____
_____
_____
_____
_____
_____
_____
_____
_____
_____
_____
_____
_____
_____

Please indicate the location of all incurred injuries and describe the type of injury.

For example, for a laceration to the right palm – shade the right hand palm and write laceration next to it connected by a line.

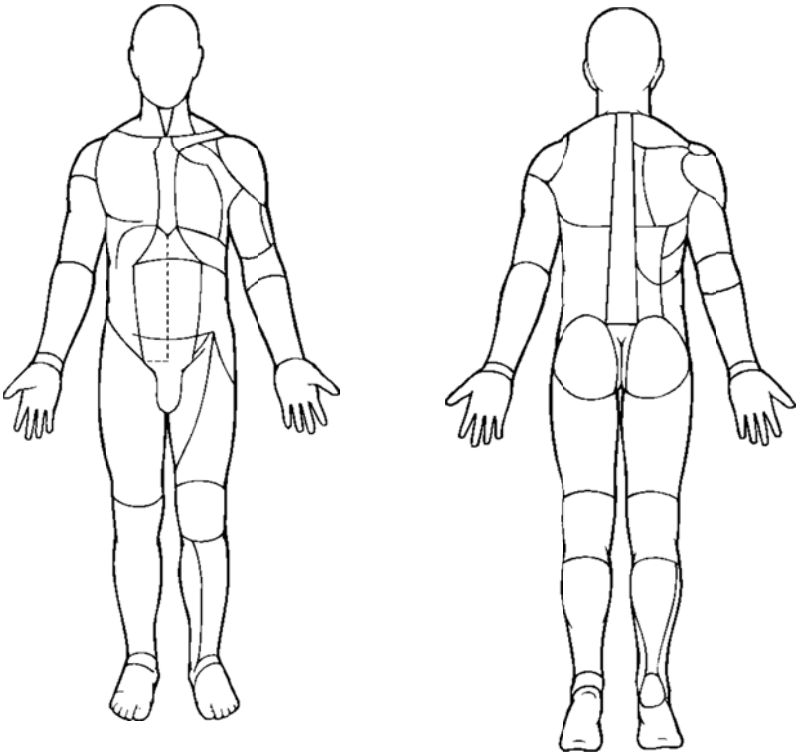

INCIDENT INVESTIGATION REPORT FORM (continued)

#5 Additional Information

Name of witnesses and others working with injured worker (attach witness statements):

_____

Object, substance, equipment involved in incident (desc/model/serial #):_____

_____

List PPE worn at time of incident: _____

Safety equipment, PPE & training required for job: _____

_____

Does employee normally operate this equipment? ☐ Yes ☐ No

Was employee instructed in the safe use of this equipment? ☐ Yes ☐ No

When/how? – Describe in detail & attach copies of equipment certifications):_____

_____

Was any defect with the equipment noted or reported prior to accident/incident? ☐ Yes ☐ No

Were standard work procedures followed? ☐ Yes ☐ No If no, why not – describe in detail, attach additional sheets if necessary and attach a copy of the standard site procedures._____

_____

Was a safety rule or specific instruction violated? ☐ Yes ☐ No If yes, what – describe in detail, attach additional sheets if necessary and attach a copy of the rule/regulation? _____

_____

When was the last safety meeting conducted? _____

When was the last jobsite audit conducted? _____

Attach copies of the last safety meeting agenda with sign-in sheet and Job Hazard Analysis for specific task.

#6 Completing Report:

Supervisor Completing Report:
Name: _____
Signature: _____
Date report prepared:

Management Review By:
Name: _____
Signature: _____

_____

State of California
Department of Industrial Relations
DIVISION OF WORKERS' COMPENSATION

Estado de California
Departamento de Relaciones Industriales
DIVISION DE COMPENSACIÓN AL TRABAJADOR

WORKERS' COMPENSATION CLAIM FORM (DWC 1)

PETITION DEL EMPLEADO PARA DE COMPENSACIÓN DEL TRABAJADOR (DWC 1)

Employee: Complete the **"Employee"** section and give the form to your employer. Keep a copy and mark it **"Employee's Temporary Receipt"** until you receive the signed and dated copy from your employer. You may call the Division of Workers' Compensation and hear recorded information at **(800) 736-7401**. An explanation of workers' compensation benefits is included as the cover sheet of this form.

You should also have received a pamphlet from your employer describing workers' compensation benefits and the procedures to obtain them.

Any person who makes or causes to be made any knowingly false or fraudulent material statement or material representation for the purpose of obtaining or denying workers' compensation benefits or payments is guilty of a felony.

Empleado: *Complete la sección* ***"Empleado"*** *y entregue la forma a su empleador. Quédese con la copia designada* ***"Recibo Temporal del Empleado"*** *hasta que Ud. reciba la copia firmada y fechada de su empleador. Ud. puede llamar a la Division de Compensación al Trabajador al* ***(800) 736-7401*** *para oir información gravada. En la hoja cubierta de esta forma esta la explicatión de los beneficios de compensación al trabjador.*

Ud. también debería haber recibido de su empleador un folleto describiendo los benficios de compensación al trabajador lesionado y los procedimientos para obtenerlos.

Toda aquella persona que a propósito haga o cause que se produzca cualquier declaración o representación material falsa o fraudulenta con el fin de obtener o negar beneficios o pagos de compensación a trabajadores lesionados es culpable de un crimen mayor "felonia".

Employee—complete this section and see note above ***Empleado—complete esta sección y note la notación arriba.***

1. Name. *Nombre.* _____ Today's Date. *Fecha de Hoy.* _____
2. Home Address. *Dirección Residencial.* _____
3. City. *Ciudad.* _____ State. *Estado.* _____ Zip. *Código Postal.* _____
4. Date of Injury. *Fecha de la lesión (accidente).* _____ Time of Injury. *Hora en que ocurrió.* _____ a.m. _____ p.m.
5. Address and description of where injury happened. *Dirección/lugar dónde occurió el accidente.* _____
6. Describe injury and part of body affected. *Describa la lesión y parte del cuerpo afectada.* _____
7. Social Security Number. *Número de Seguro Social del Empleado.* _____
8. Signature of employee. *Firma del empleado.* _____

Employer—complete this section and see note below. ***Empleador—complete esta sección y note la notación abajo.***

9. Name of employer. *Nombre del empleador.* _____
10. Address. *Dirección.* _____
11. Date employer first knew of injury. *Fecha en que el empleador supo por primera vez de la lesión o accidente.* _____
12. Date claim form was provided to employee. *Fecha en que se le entregó al empleado la petición.* _____
13. Date employer received claim form. *Fecha en que el empleado devolvió la petición al empleador.* _____
14. Name and address of insurance carrier or adjusting agency. *Nombre y dirección de la compañía de seguros o agencia adminstradora de seguros.* _____
15. Insurance Policy Number. *El número de la póliza de Seguro.* _____
16. Signature of employer representative. *Firma del representante del empleador.* _____
17. Title. *Título.* _____ 18. Telephone. *Teléfono.* _____

Employer: You are required to date this form and provide copies to your insurer or claims administrator and to the employee, dependent or representative who filed the claim within **one working day** of receipt of the form from the employee.

SIGNING THIS FORM IS NOT AN ADMISSION OF LIABILITY

Empleador: *Se requiere que Ud. feche esta forma y que provéa copias a su compañía de seguros, administrador de reclamos, o dependiente/representante de reclamos y al empleado que hayan presentado esta petición dentro del plazo de* ***un día hábil*** *desde el momento de haber sido recibida la forma del empleado.*

EL FIRMAR ESTA FORMA NO SIGNIFICA ADMISION DE RESPONSABILIDAD

☐ Employer copy/*Copia del Empleador* ☐ Employee copy/ *Copia del Empleado* ☐ Claims Administrator/*Administrador de Reclamos* ☐ Temporary Receipt/*Recibo del Empleado*

7/1/04 Rev.

Workers' Compensation Claim Form (DWC 1) & Notice of Potential Eligibility

Formulario de Reclamo de Compensación para Trabajadores (DWC 1) y Notificación de Posible Elegibilidad

Return to Work: To help you to return to work as soon as possible, you should actively communicate with your treating doctor, claims administrator, and employer about the kinds of work you can do while recovering. They may coordinate efforts to return you to modified duty or other work that is medically appropriate. This modified or other duty may be temporary or may be extended depending on the nature of your injury or illness.

Payment for Permanent Disability: If a doctor says your injury or illness results in a permanent disability, you may receive additional payments. The amount will depend on the type of injury, your age, occupation, and date of injury.

Vocational Rehabilitation (VR): If a doctor says your injury or illness prevents you from returning to the same type of job and your employer doesn't offer modified or alternative work, you may qualify for VR. If you qualify, your claims administrator will pay the costs, up to a maximum set by state law. VR is a benefit for injuries that occurred prior to 2004.

Supplemental Job Displacement Benefit (SJDB): If you do not return to work within 60 days after your temporary disability ends, and your employer does not offer modified or alternative work, you may qualify for a nontransferable voucher payable to a school for retraining and/or skill enhancement. If you qualify, the claims administrator will pay the costs up to the maximum set by state law based on your percentage of permanent disability. SJDB is a benefit for injuries occurring on or after 1/1/04.

Death Benefits: If the injury or illness causes death, payments may be made to relatives or household members who were financially dependent on the deceased worker.

It is illegal for your employer to punish or fire you for having a job injury or illness, for filing a claim, or testifying in another person's workers' compensation case (Labor Code 132a). If proven, you may receive lost wages, job reinstatement, increased benefits, and costs and expenses up to limits set by the state.

You have the right to disagree with decisions affecting your claim. If you have a disagreement, contact your claims administrator first to see if you can resolve it. If you are not receiving benefits, you may be able to get State Disability Insurance (SDI) benefits. Call State Employment Development Department at (800) 480-3287.

You can obtain free information from an information and assistance officer of the State Division of Workers' Compensation, or you can hear recorded information and a list of local offices by calling **(800) 736-7401**. You may also go to the DWC web site at **www.dir.ca.gov**. Link to Workers' Compensation.

You can consult with an attorney. Most attorneys offer one free consultation. If you decide to hire an attorney, his or her fee will be taken out of some of your benefits. For names of workers' compensation attorneys, call the State Bar of California at (415) 538-2120 or go to their web site at **www.californiaspecialist.org**.

impuestos. Los pagos por incapacidad temporal son dos tercios de su pago semanal promedio, con cantidades mínimas y máximas establecidas por las leyes estatales. Los pagos no se hacen durante los primeros tres días en que Ud. no trabaje, a menos que Ud. sea hospitalizado(a) de noche, o no pueda trabajar durante más de 14 días.

Regreso al Trabajo: Para ayudarle a regresar a trabajar lo antes posible, Ud. debe comunicarse de manera activa con el médico que le atienda, el/la administrador(a) de reclamos y el empleador, con respecto a las clases de trabajo que Ud. puede hacer mientras se recupera. Es posible que ellos coordinen esfuerzos para regresarle a un trabajo modificado, o a otro trabajo, que sea apropiado desde el punto de vista médico. Este trabajo modificado, u otro trabajo, podría extenderse o no temporalmente, dependiendo de la índole de su lesión o enfermedad.

Pago por Incapacidad Permanente: Si el doctor dice que su lesión o enfermedad resulta en una incapacidad permanente, es posible que Ud. reciba pagos adicionales. La cantidad dependerá de la clase de lesión, su edad, su ocupación y la fecha de la lesión.

Rehabilitación Vocacional: Si el doctor dice que su lesión o enfermedad no le permite regresar a la misma clase de trabajo, y su empleador no le ofrece trabajo modificado o alterno, es posible que usted reúna los requisitos para rehabilitación vocacional. Si Ud. reúne los requisitos, su administrador(a) de reclamos pagará los costos, hasta un máximo establecido por las leyes estatales. Este es un beneficio para lesiones que ocurrieron antes de 2004.

Beneficio Suplementario por Desplazamiento de Trabajo: Si Ud. no vuelve al trabajo en un plazo de 60 días después que los pagos por incapcidad temporal terminan, y su empleador no ofrece un trabajo modificado o alterno, es posible que usted reúne los requisitos para recibir un vale no-transferible pagadero a una escuela para recibir un nuevo entrenamiento y/o mejorar su habilidad. Si Ud. reúne los requisitios, el administrador(a) de reclamos pagará los costos hasta un máximo establecido por las leyes estatales basado en su porcentaje del incapicidad permanente. Este es un beneficio para lesiones que ocurren en o después de 1/1/04.

Beneficios por Muerte: Si la lesión o enfermedad causa la muerte, es posible que los pagos se hagan a los parientes o a las personas que vivan en el hogar, que dependían económicamente del/de la trabajador(a) difunto(a).

Es ilegal que su empleador le castigue o despida, por sufrir una lesión o enfermedad en el trabajo, por presentar un reclamo o por atestiguar en el caso de compensación para trabajadores de otra persona. (El Codigo Laboral sección 132a). Si es probado, puede ser que usted reciba pagos por perdida de sueldos, reposición del trabajo, aumento de beneficios, y gastos hasta un límite establecido por el estado.

Ud. tiene derecho a estar en desacuerdo con las decisiones que afecten su reclamo. Si Ud. tiene un desacuerdo, primero comuníquese con su administrador(a) de reclamos, para ver si usted puede resolverlo. Si usted no está recibiendo beneficios, es posible que Ud. pueda obtener beneficios de Seguro Estatal de Incapacidad (SDI). Llame al Departamento Estatal del Desarrollo del Empleo (EDD) al (800) 480-3287.

Ud. puede obtener información gratis, de un oficial de información y asistencia, de la División estatal de Compensación al Trabajador *(Division of Workers' Compensation – DWC)*, o puede escuchar información grabada, así como una lista de oficinas locales, llamando al **(800) 736-7401**. Ud. también puede ir al sitio electrónico en el Internet de la DWC en **www.dir.ca.gov**. Enlácese a la sección de Compensación para Trabajadores.

Ud. puede consultar con un(a) abogado(a). La mayoría de los abogados ofrecen una consulta gratis. Si Ud. decide contratar a un(a) abogado(a), sus honorarios se tomarán de sus beneficios. Para obtener nombres de abogados de compensación para trabajadores, llame a la Asociación Estatal de Abogados de California *(State Bar)* al (415) 538-2120, ó vaya a su sitio electrónico en el Internet en **www.californiaspecialist.org**.

INJURED WORKER STATEMENT

Date: _____ Project Name: _____

Name: _____Date of Birth: _____

Address: _____ City, State, Zip _____

Phone: _____ _____Phone 2:_____

Date of Incident: _____Time of Incident: _____ □ AM □ PM

What happened? (Explain in Detail)

_____
_____
_____
_____
_____
_____
_____
_____
_____

List names of co-workers that witnessed the incident:

_____
_____

To what part of the body was the injury sustained?
(Please print in this space and mark with "X" on diagram)

_____
_____

Employee Signature: _____

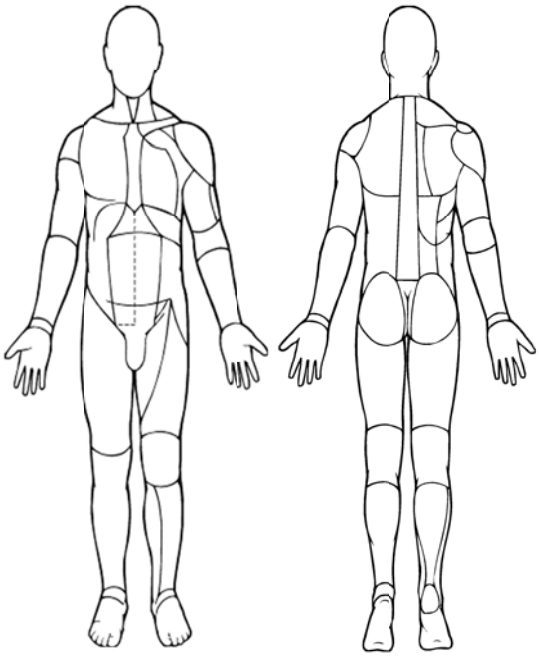

EMPLOYEE WITNESS STATEMENT

Date: _____ Project Name: _____

Name of witness_____ Company: _____

Address: _____ City, State, Zip _____

Phone: _____ Phone 2:_____

Date of Incident: _____ Time of Incident: _____ □ AM □ PM

Name of injured worker: _____

What happened? (Explain in Detail)

_____
_____
_____
_____
_____
_____
_____
_____
_____
_____
_____
_____
_____

I believe the preceding statement to be true to the best of my knowledge.

Witness Signature: _____

SUPERVISOR STATEMENT

Date: _____ Project Name: _____

Name of supervisor_____ Company: __ _____

Address: _____ City, State, Zip _____

Phone: _____Phone 2:_____

Date of Incident: _____Time of Incident: _____ □ AM □ PM

Name of injured worker: _____

What happened? (Explain in Detail)

_____
_____
_____
_____
_____
_____
_____
_____
_____
_____
_____
_____
_____
_____

I believe the preceding statement to be true to the best of my knowledge.

Supervisor Signature: _____

RETURN TO WORK PROGRAM

Modified work is defined as the temporary period of time when the employee first comes back to work with restrictions or job modifications, until the time when they are fully functional in their job or the Company determines that it cannot reasonably accommodate the work restrictions.

Webcor/Obayashi Joint Venture will attempt to provide modified work that allows our injured employees an opportunity to return to work on a modified work status whenever possible. This modified work process will focus on your abilities and we will attempt to make the necessary accommodations for your work restrictions.

When an employee reports an injury, they will be given certain forms and may be taken to a doctor for treatment and/or an examination. If the doctor determines that the employee qualifies for our Return to Work Program, the doctor will complete a work status report with the recommended restrictions for modified duty. Webcor/Obayashi Joint Venture will then review the work status report and to the extent possible provide modified work until the employee is able to return to full duty. Modified work may be offered at any project and/or any shift.

You must inform your doctor that there is modified work available to you, regardless of your work restrictions. You must also report to work immediately if possible, or by the next working day to inform your supervisor in any changes to your work restrictions. You must give your supervisor your written work status from the doctors listing all work restrictions. You may not return to work without release from your doctor.

This letter serves as notice to you that modified work is available to you. Failure to return to the position that is available may affect your employment with Webcor/Obayashi Joint Venture.

Webcor/Obayashi Joint Venture feels it is important to create an environment that allows injured employees an opportunity to recover to their maximum potential and, whenever possible, continue to contribute to the success of our organization.

☐ I have read and fully understand the above policy for Webcor/Obayashi Joint Venture Return-To-Work Program.
Signing this form states that I will accept modified duty.

_____	_____	___/____/____
Employee Name (Printed)	Employee Signature	Date

RETURN TO WORK AGREEMENT

Webcor/Obayashi Joint Venture has modified work available that allows our injured employees an opportunity to return to work on a modified work status whenever possible. This modified work process will focus on your abilities and we will attempt to make the necessary accommodations for your work restrictions.

Information received from Dr. _____indicates that although you are not able to perform all of your customary job duties, you may perform other modified duties as of ___/___/_____ that are within the following restrictions/capabilities:

We request that you report on:

Date: _____ Report to: _____
Time: _____ Days Per Week: _____
Address: _____ Hours Per Day: _____
Phone: _____

** Wages will not be affected by this agreement.*

Modified work is defined as the temporary period of time when the employee first comes back to work with restrictions or job modifications, until the time when they are fully functional in their job or the Company determines that it cannot reasonably accommodate the work restrictions.

This letter serves as notice that modified work is available to you. Failure to return to the position that is available may affect your workers' compensation benefits and may be grounds for termination.

Webcor/Obayashi Joint Venture feels it is important to create an environment that allows injured employees an opportunity to recover to their maximum potential and continue to contribute to the success of our organization.

☐ I _____ agree to the restrictions given to me by the doctor and will report For modified duty on ___/____/_____.

☐ I declined this modified work position.

_____ ____/_____/_____
Employee Signature Date

If you have any questions or concerns, please contact Danielle DiRicco at 510-476-2578 or 650-520-4251.

MODIFIED DUTY OFFER LETTER

3/20/2008

Jane Doe
1234 Happy Lane
San Francisco, CA 94105

Re: Bona Fide Offer for Modified Duty
Dear Jane Doe:

Webcor/Obayashi Joint Venture has offered you modified duty to accommodate the restrictions given by your doctor. Our records show that you have not shown up to work or called your Supervisor in 3 days, we would like to offer you once again modified duty to help you transition back to your full capacity.

We believe this assignment is within your capabilities as described by your doctor. You will only be assigned tasks consistent with your physical abilities, skills and knowledge. If any training is required to do this assignment, it will be provided.

Job title: _____

Description of physical requirements of this position_____
_____

Address: _____

Work Hours: From: (_____) To: (_____)

(Wages will not be affected)

Job: _____Supervisor_____

-Attached is a copy of the letter you signed at the doctor's appointment when you were put on modified duty, stating you agreed to accept modified/light duty.
-Attached is a copy of the doctor's status report with your restrictions.

This job offer will remain open for 48 hours from your receipt of this letter. If we do not hear from you within 48 hours, we will assume that you have refused this offer and this may be grounds for termination.

We look forward to your return. If you have any questions, please do not hesitate to contact me at:
510-476-2578 or 650-520-4251 or email me at **ddiricco@webcor.com**

Sincerely,

Danielle DiRicco
Safety Project Assistant

ELEVATED WORK

Policy & Scope

All contractors have the duty to provide fall protection for all workers potentially exposed to a fall situation. *Safety harness is the only acceptable means of personal fall arrest system permitted on this site, the use of safety body belts is not acceptable and violates federal OSHA standard 1926.502 (d).*

Pre-Task Planning/Job Hazard Analysis
Work activities that expose worker(s) to fall hazards of 6 feet or more, work on/around scaffolding, as well as overhead work requiring the worker to be 6 feet or more above the work platform are activities defined by Webcor/Obayashi Joint Venture to be High Hazard and therefore require detailed, written pre-task planning.

Duty to have Fall Protection
All workers must be protected from the hazard of falls whenever work is being completed at heights of six feet (6') or greater measured from the work platform to the bottom of the sole of the foot. The six-foot rule, at minimum, applies to the following conditions:

- Ladders
- Walking and working surfaces
- Unprotected sides and edges
- Hoist areas
- Holes
- Formwork and reinforcing steel
- Ramps, runways, and other walkways
- Excavation and trenching
- Dangerous or large pieces of equipment
- Overhand bricklaying and related work
- Precast concrete erection
- Wall openings
- Floor openings
- Leading edge
- Scaffolding erection/dismantle
- Any additional circumstance that may be deemed necessary by Webcor/Obayashi Joint Venture.

Fall Protection Systems
Anytime a potential fall hazard of 6 feet or more exists, a suitable fall protection system must be provided to protect the worker. Examples of suitable systems include the following:

- Guardrail Systems
- Warning Line Systems
- Safety Net Systems
- Positioning Device Systems
- Personal Fall Arrest Systems

Falling Object Protection Systems
Anytime a potential hazard of falling objects exists, suitable systems must be provided to protect workers. Examples of suitable fall object protection systems include the following:

- Covers
- Toe boards
- Canopies
- Debris Nets

Safety Monitoring Systems
Webcor/Obayashi Joint Venture does not recognize the use of safety monitors as an effective means of ensuring the safety of persons at elevated heights; hence, the use of a safety monitor is only allowed when all other means have been demonstrated to be infeasible. A member of Webcor/Obayashi Joint Venture Project Management, competent in fall protection, will make the final determination, and then only after a written fall protection plan limited to the actual work to be performed is approved by Webcor/Obayashi Joint Venture.

Personal Fall Arrest Systems

Personal fall arrest systems are designed to control the fall of a worker and minimize the injury once a worker has fallen. Personal fall arrest systems consist of the following components:

- Full body harness (body wear)
- Shock absorbing lanyard or retractable (connecting device)
- Tie off point (anchorage)
- Training

Specific Requirements

- Safety harness is the only acceptable means of personal fall arrest system permitted on any Webcor/Obayashi Joint Venture project; the use of body belts is not acceptable for fall protection (including positioning systems).
- Retractable lanyards are the most preferred fall protection systems for this project.
- Each subcontractor and tiered subcontractor is responsible for providing and requiring the use of safety harnesses, lifelines and lanyards when workers are exposed to a fall of 6 feet or greater.
- All subcontractors must provide safety harness at their cost when fall protection is required.
- All lanyards must be equipped with locking snap hooks.
- Appropriate shock absorbing lanyards will be used for fall protection when they do not create a greater hazard due to the length of the potential fall.
- Shock absorbing lanyards are not to be used in combination with a retractable lanyard.
- Any safety harness, lifeline or lanyard actually subjected to in-service loading MUST be immediately removed from service and should not be used again for worker safeguarding.
- Fall arrest equipment should be removed from service when evidence of wear is detected.
- Retractable lifelines are preferred where direct anchorage is not available.
- All safety harnesses, lifelines and lanyards must have a nominal breaking strength of 5,000 lbs (5,400 lbs in CA).

- The anchorage (tie off point) must be capable of withstanding a minimum 5,000 lbs (5,400 lbs in CA) tensile strength per worker attached.
- Anchorage used for attachment of personal fall arrest equipment should be secured above the point of operation whenever possible
- Anchorage, tie off, must generally be above the worker's head.
- Anchorage must be high enough that the worker will not strike any lower level surface or object should a fall occur.
- All fall protection equipment shall be inspected daily/monthly and before each use, with documentation made available upon request that it is in proper working order.

Rescue Plans
Specific plans for rescue of workers should be developed and rehearsed prior to initiating work requiring the use of fall protection. Rescue plans and the basic work plan should be submitted to the Webcor/Obayashi Joint Venture Project Management for review and comment. Concerns expressed by Webcor/Obayashi Joint Venture Project Management or any other reviewing authority shall be addressed fully prior to exposing any worker to the elevated work area.

Floor & Wall Openings and Guard Rail Systems
To control conditions where there is a danger of workers or materials falling through floor, roof, perimeter edges or wall openings, such openings should be covered/protected and marked with a warning sign (i.e., DANGER HOLE, DO NOT REMOVE).

All protection systems are to be maintained at all times. Any violation that is not rectified immediately will result in removal of the responsible supervisor. Further violations will result in termination for cause of the responsible subcontractor's contract.

Floor Openings
Floor opening covers should be capable of supporting the maximum intended floor load and installed so as to prevent accidental displacement. Covers should be distinctively marked and anchored. For purposes of covering, a floor opening is defined as any opening from 2" up to 16 square feet. All others must be protected with top and intermediate rail and toe board.

Rail Systems
- Standard Railing: A standard railing should consist of a top rail, intermediate/mid-rail, toe board and posts:
    - The top rail should be approximately 42 inches from the upper surface of the rail to the floor, platform, or ramp level. The top rail should have a smooth surface throughout its length and be made of at least 2-inch by 4-inch stock, 3/8-inch double clamped wire rope or its equivalent. It should be secured to withstand a 200-pound, horizontal force with minimum deflection.
    - The midrail should be halfway between the top rail and the floor, runway, platform, or ramp. The ends of the rail should not overhang the terminal posts except when it does not constitute a projection hazard. The midrail sill should be made of at least 1-inch by 6-inch stock or its equivalent.
    - The toe board should have a 4-inch minimum height and should be securely fastened in place with no more than 1/4 inch clearance above the floor level.

    - Wooden railing posts (verticals) should be made of at least 2-inch by 4-inch stock or its equivalent, and be spaced so as not to exceed 8 feet on center.
- Other Railings: Other types, sizes and arrangements of railing construction are acceptable, provided they meet the following requirements:
    - A smooth surfaced top rail approximately 42 inches above the floor.
    - Strength to withstand the minimum of 200 pound top rail pressure with a minimum of deflection.
    - For specific material requirements, refer to applicable regulations.

Guard Rail Openings

- Work that requires the opening of guardrails or the removal of hole covers shall be approved in advance by the Webcor/Obayashi Joint Venture Project Management.
- Particular attention shall be given to the alternate means of fall protection required to safely perform the work and protect other workers in the vicinity of the fall exposure.
- Those who remove the rail, are responsible for replacing it in a manner meeting or exceeding local, state, federal, or Webcor/Obayashi Joint Venture practices, whichever may be more stringent.

Safety Nets

Safety nets will comply with CFR 1926.502 requirements. The use of safety nets may be allowed only after a written fall protection plan limited to the actual work to be performed is reviewed and approved by Webcor/Obayashi Joint Venture. Below are guidelines for Safety Nets:

- Safety nets should be provided by the subcontractor or tiered subcontractor when work places are more than 25 feet above the ground or other surfaces where the use of ladders, scaffolds, catch platforms, temporary floors, safety lines or safety harnesses are impractical. When safety net protection is required, operations should not be undertaken until the net is in place and has been thoroughly tested.
- Safety nets should extend 8 feet beyond the edge of the work surfaces where workers are exposed and should be installed as close under the work surface as practical. In no case should the safety net be more than 25 feet below the work surface. Nets should be hung with sufficient clearance to prevent the user's contact with surfaces or structures below. Clearances should be determined by impact load testing.
- The mesh size of the nets should not exceed 6 inches by 6 inches. All nets should meet accepted standards of 17,500 foot pounds minimum impact resistance, as determined and certified by the manufacturer, and should bear a label of proof test. Edge ropes should have a minimum breaking strength of 5,000 pounds. Forged steel safety hooks or shackles should be used to fasten the net to its supports. Connections between net panels should develop the full strength of the net.

Fall Protection Training

Subcontractors and all tier subcontractors must provide as a minimum, by a competent person, the following training. Documentation of training must be forwarded to Webcor/Obayashi Joint Venture upon request. Training must include, at a minimum:

- The nature of the fall hazards in the work area.
- The correct procedure for erecting, maintaining, disassembling and inspecting the fall protection systems to be used (the installation of personal fall protection systems cannot in themselves create a fall hazard exposure to the worker installing the system).

- The use and operations of guardrail systems, personal fall arrest systems, safety net systems, warning line systems, safety monitoring systems (refer to section 2.3 of this Appendix), controlled access zones and any other methods of protection to be used.
- The role of each worker in the safety monitoring system (refer to section 2.3 of this appendix) when this system is approved for use.
- The limitations on the use of mechanical equipment during the performance of roofing work on low-sloped roofs.
- The correct procedures for the handling and storage of equipment and materials and the erection of overhead protection.
- The role of workers in fall protection plans.

Aerial Lifts

- Lifts should be inspected each day prior to use to verify they are in safe working condition. (Refer to Scissor/Boom Lift Inspection form at the end of this Appendix or use manufacturer's inspection guidelines.)
- Only authorized persons should operate an aerial lift, and must be trained on the equipment they will be operating.
- Always stand on the floor of the basket, do not sit or climb on the edge of the basket or use planks, ladders, or other devices for a work position.
- A body harness should be worn and a shock absorbing lanyard attached to the boom or basket when working from an aerial lift. Tying off to an adjacent pole, structure or equipment is not permitted.
- Boom and basket load limits specified by the manufacture should not be exceeded.
- The brakes should be locked and when outriggers are used, they should be positioned on pads or a solid surface. Wheel chocks must be used before using an aerial lift on an incline provided they can be safely installed.
- An aerial lift truck should not be moved when the boom is elevated with personnel in the basket.
- Aerial lifts should have both platform (upper) and lower controls. Upper controls should be in or beside the platform within easy reach of the operator. Lower controls should provide for overriding the upper controls. Controls should be plainly marked as to their function. Lower level controls should not be operated unless permission has been obtained from the employee in the lift, except in case of emergency.
- Lifts must be thoroughly inspected to determine if they require two hands or a hand and a foot to operate. Any lift that does not meet these conditions must immediately be removed from service and either returned, replaced, or modified to meet this requirement.
- A spotter may be needed when there is a potential for operator injury due to physical contact with facility systems or structures or in congested areas. Spotters may also be needed when there is a potential for damage to sensitive facility systems or structures.

Scissor Lifts

- Lifts should be inspected each day prior to use to determine that they are in safe working condition (refer to Scissor/Boom Lift Inspection form at the end of this Appendix or use manufacturer's inspection guidelines).
- Only authorized persons should operate a scissor lift, and must be trained on the equipment they will be operating.
- Lifts should be operated in accordance with manufacturer's recommendations.

- Lifts must be thoroughly inspected to determine if they require two hands or a hand and a foot to operate. Any lift that does not meet these conditions must immediately be removed from service and either returned, replaced, or modified to meet this requirement. If the requirement cannot be met for a two-hand controlled scissor lift, and a lift is unavailable to meet this requirement, a spotter will be needed for all equipment movement (other than incidental movement where there is no potential for operator injury due to physical contact with facility systems or structures).

Note: A spotter may be needed when there is a potential for operator injury due to physical contact with facility systems or structures and in congested areas. Spotters may also be needed when there is a potential for damage to sensitive facility systems or structures.

RESPIRATORY PROTECTION PROGRAM

Purpose
The purpose of this plan is to establish a program and procedures for wearing respiratory protection at **WEBCOR/OBAYASHI JOINT VENTURE.**

This program supports compliance with the Occupational Safety and Health Administration Respiratory Protection Standard as found in 29 CFR 1910.134. This program applies to all company employees who work in areas whose exposures to airborne contaminants require the use of respirators.

Definitions
Dusts: Particles released during work operations such as grinding and sawing.

Fit Testing: The process of making sure that an employee's respirator fits property and will provide the necessary protection without any leaks.

Fumes: Vaporized, condensed metals such as lead that may be present during welding operations.

Gases: Examples include nitrogen, methane, and carbon monoxide.

IDLH: An OSHA hazard classification—"Immediately Dangerous To Life & Health." An atmospheric condition that poses an immediate hazard to life or poses immediate irreversible debilitating effects on health.

Mists: Particles of liquid released during operations such as spray painting.

NIOSH: National Institute for Occupational Safety and Health; an agency that establishes minimum performance standards for respirators and tests and approves respirators for various uses.

Vapors: Gaseous forms of a liquid such as paint solvents.

Responsibilities

The Program Administrator
Responsible for:
- Issuing and administering this program and making sure that the program satisfies the requirements of all applicable federal, state, or local respiratory protection requirements.
- Providing initial and periodic training to employees on respiratory protection requirements.
- Conducting hazard assessments where respiratory hazards may be present.
- Assisting managers and supervisors in the selection of appropriate respiratory protection for use on their jobsites.
- Auditing the respiratory protection program to ensure its continued effectiveness.

The Purchasing Agent will be the Jobsite Superintendent.

Responsible for:
- purchasing respiratory protection equipment.
- Assuring that all equipment purchased is approved by NIOSH/MSHA.

Superintendents Whose Jobsites Are Required To Wear Respiratory Equipment.
Responsible for:
- Knowing the hazards in their areas that require respiratory protection.
- Knowing the types of respirators that need to be used.
- Enforcing the wearing of respiratory protection in the areas where it is required.
- Making sure employees are knowledgeable about the respiratory requirements for the areas in which they work.
- Providing training on hazardous chemicals to employees.

Employees Who Are Required To Wear Respiratory Protection.
Responsible for:
- Wearing appropriate respiratory protection.
- Properly maintaining their respiratory protection equipment and keeping it in a clean and operable condition.

Program Activities
General
- Respiratory hazards will be assessed on the jobsite and appropriate protection will be provided for all affected employees.
- Employees are required to wear respiratory protection wherever respiratory hazards exist.
- Respiratory protection is stored and issued from the jobsite office.
- Efforts will be made to minimize the use of hazardous chemicals in the workplace.
- If the use of hazardous chemicals creates an imminent-danger situation, the operation will be discontinued.

Selection and Use of Respirators
- Respirators will be selected according to the type of activity for which they will be used and the type of potential air contaminants associated with these activities.
- Only NIOSH/MSHA approved respirators will be used.
- All respirator protection equipment will be used in accordance with the manufacturer's recommendations.
- In areas in which maintenance and sanitation services are unavailable or respiratory usage is limited, disposable respirators will be used.
- Non disposable respirators which are used exclusively by one person will be maintained and cared for by the wearer.
- All non disposable respirators which are used by more than one person will be cleaned and sanitized between each use.
- Jobsite Superintendents will be responsible for re-issuing of respirators.
- Chemical cartridge respirators will be stored in airtight, labeled containers between each use. All other respirators will be stored in a clean and sanitary manner and labeled with the wearer's name.

- Disposable respirators will be used until the cartridge or filter media requires replacement or when the face piece is dirty.

Respirator Inspection and Maintenance
- Respirators will be inspected by the wearer prior to each use.
- Supervisors on jobsites where respirators are used will verify that appropriate respirator protection is being used, inspected, and maintained properly.
- Non disposable respirators will be inspected according to the manufacturer's instructions.

Fit Testing
- All users of respirators will be fit tested to ensure a proper face piece-to-face seal.
- Employees whose facial hair interferes with the face piece-to-face seal will not be allowed to wear negative-pressure air-purifying respirators.

Training
- All employees who are required to wear respirators will receive training in their use, selection and appropriate maintenance.
- Training will provide an opportunity for the employee to handle the respirator, have it fitted property, test the face piece-to-face seal, wear it in normal air, and wear it in a test atmosphere.

Wearing Respirators In Emergency Situations
- Respiratory protection designated for emergency use will be inspected monthly.
- All employees who are expected to use emergency equipment will be trained in its use.

SILICA EXPOSURE PROGRAM

Purpose
The purpose of this policy is to establish procedures to protect employees from the health hazards associated with exposure to airborne crystalline silica generated by various construction activities. Due to the amount of work we do with concrete and masonry on almost any project; our workers have the potential for silica exposures through abrasive blasting, chipping, hammering, sawing, grinding or demolition of concrete.

Silicosis is a lung disease marked by hardening of lung tissue and symptoms such as shortness of breath, possible fever, fatigue and eventual respiratory failure. Silicosis also renders a person more susceptible to disease of the lungs, such as tuberculosis. Where there is concrete, there is a potential silica exposure so it is essential to monitor our work activities and take the necessary corrective actions to protect our employees.

Responsibilities
Project Supervision shall:
- Evaluate all work activities for silica exposures
- Institute engineering controls as a first line of protection to reduce silica exposures
- Institute all administrative/work practice controls to reduce silica exposures when feasible and when engineering controls have been explored and ruled out.

- Institute the use of respirators to reduce exposures when the above mentioned controls fail to reduce silica exposure levels
- Provide training identified in this policy when employees are exposed to silica hazards
- Provide necessary respirator protection as well as training in its proper use, when deemed necessary.

Craftsmen shall:
- Follow all work plans that identify engineering and administrative work practice controls to reduce their exposure to crystalline silica
- Wear respiratory protection to reduce their exposure to crystalline silica when deemed necessary by their supervisor
- Not eat, drink, use tobacco products or apply cosmetics in areas where there is dust containing crystalline silica

Procedure
Exposure Assessment
- Work tasks that must be monitored for crystalline silica exposure include by are not limited to:
    - Jack hammering and chipping
    - Grinding concrete
    - Tunneling
    - Sandblasting
    - Dry sweeping or blowing concrete debris, sand or rock dust
    - Demolition of concrete/masonry structures
    - Crushing, loading, dumping rock or concrete
    - Saw cutting concrete or rock
    - Crystalline silica exposures must be maintained below the OSHA PEL of

    10mg/m3
    (Percentage Quartz) +2
    - Historical data from similar operations producing silica exposure can be used as exposure monitoring when feasible
    - Assessment of worker exposure to reparable crystalline silica dust during various tasks associated with concrete finishing and demolition activities is performed annually by an Industrial Hygienist. Specific job tasks monitored include:
        - Grinding and Patching
        - Chipping
        - Demolition
        - Segregation, stockpile, and loading of concrete rubble

Engineering Controls
- When it has been determined that employees will be exposed to crystalline silica in excess of the PEL, engineering controls will be used as a first line of defense.
- Engineering controls include, but are not limited to:
    - Use of dust collection systems which are available for many dust generating tools and equipment
    - Wetting down the grinding or cutting surface to reduce dust emissions

    - During saw cutting, use equipment that provides water to the blade
    - During rock drilling, use water through the drill stem to reduce the amount of dust in the air
    - During abrasive blasting use abrasives with a low silica or no silica content
    - Use local exhaust ventilation to prevent dust from being released into the air
- In the event engineering controls fail to reduce worker silica exposure below the PEL administrative controls will be the next line of defense.

Administrative/Work Practice Controls

- When engineering controls cannot be utilized or are not effective to sufficiently reduce exposure to the inhalation of silica, administrative controls will be used when feasible to reduce the time of exposure for the employees
- Where work crews are of sufficient size, the pool of workers skilled in the operation of applicable tools, and job duration is sufficient to accommodate worker rotation, develop a program to reduce the exposure time of individual workers to silica.

Respirator Protection

- When engineering and administrative/work practice controls cannot be utilized or are not effective to sufficiently reduce exposure to inhalation of silica, respirators must be used to reduce employee exposures.
- Select respirators based on the criteria identified in the respirator protection section of this manual.

Follow-up Monitoring

- After initial assessment and institution of exposure controls, follow-up air monitoring will be conducted to assess the effectiveness of the controls put in place
- In the event that the follow-up monitoring reflects that instituted controls have not yet reduced employee exposures, the operations will cease, be re-evaluated and alternative controls will be explored to reduce employee exposures to silica

Training

- Employees will be trained in the following
    - Hazards of silica exposure
    - The requirements of this program
    - Engineering and administrative/work practice controls, if any, that have been instituted to control silica exposures
    - Personal protective equipment specific to their work assignments
    - The employees right of access to exposure monitoring and medical records.

Emergency Procedures

- Call 911
- Identify the injury
- Provide necessary first aid
- Ventilate the area
- Utilize the eye wash station
- Stabilize the person, wear PPE
- Don’t move injured unless absolutely necessary
- Secure scene, make sure no one else can be hurt
- Release care of injured to emergency personnel
- Get medical screening if you come into contact with blood

CONCRETE CODE OF SAFE PRACTICES

Introduction

The concrete appendix is established to assist in conforming to the requirements for all construction activities involving concrete performed on Webcor/Obayashi Joint Venture projects. This includes, but is not limited to:

- Cast in Place
- Shoring & Reshoring
- Formwork/False work
- Post Tensioning
- Placing & Finishing
- Etc.

Definitions

Bull float means a tool used to spread out and smooth concrete.

Formwork means the total system of support for freshly placed or partially cured concrete, including the mold or sheeting (form) that is in contact with the concrete as well as all supporting members including shores, reshores, hardware, braces, and related hardware.

Limited access zone means an area alongside a masonry wall, which is under construction and which is clearly demarcated to limit access by employees.

Precast concrete means concrete members (such as walls, panels, slabs, columns, and beams) which have been formed, cast, and cured prior to final placement in a structure.

Reshoring means the construction operation in which shoring equipment (also called reshores or reshoring equipment) is placed, as the original forms and shores are removed, in order to support partially cured concrete and construction loads.

Shore means a supporting member that resists a compressive force imposed by a load.

Fall Protection

Workers working more than 6 feet above any adjacent working surface or placing reinforcing steel in walls, piers, columns, etc. should be protected by personal fall arrest system, guardrail system or equivalent device. In addition to the above general guidelines, the following specific guidelines will also apply

- Unless otherwise provided by a site specific fall protection plan, the placing of frames and stringers should be from below via appropriate ladders, temporary work platforms, false decks, scaffolds, or other similar work platforms.
- Unless otherwise provided by a site specific fall protection plan, the first several joists spread should be from below via appropriate ladders, temporary work platforms, false decks, scaffolds, or other similar work platforms. Once the first several joists are positioned, a work platform (e.g. 4x6 sheet of

plywood or similar) should be placed on top of a placed joists and all further spreading of joists should take place from this work platform or successive sheets of plywood laid to extend this platform. Work should take place from the center of the bay, with joists spaced no greater than 24" on center. Any work within 6' of the leading edge and greater than 6' above a lower working surface should be protected by a suitable fall protection system.

- Workers inside a Cunningham beam for, where the form leading edge is less than 39" in height and the worker is greater than 6' above a lower working surface, should be protected by a suitable fall protection system consisting of a catenary or similar pendant type line and personal fall arrest system.
- As soon as practical, a perimeter guardrail system should be established. For more information on guardrail systems refer to the Elevated Work Appendix.
- Special attention and consideration should be given to workers on ladders within 6' of leading edge such as when working on columns or wall forms. Additional fall protection measures may be required.
- When working on vertical reinforcing steel columns or false work, fall protection should be set in advance from ladders, manually propelled elevated work platforms, or similar means so that 100% fall protection can be utilized.
- Workers on wall forms greater than six (6) feet above any adjacent working surface should be protected from falling by a personal fall arrest system or equivalent system. Ensure appropriate anchorage points are provided and utilized. Where applicable , a two hook system for 100% fall protection should be utilized.
- Workers who are placing or tying reinforcing steel more than six (6) feet above any adjacent working surface should be protected from falling by personal fall arrest system or equivalent system.
- When workers are exposed to falls greater than six (6) feet above any adjacent working surface while erecting or dismantling shoring systems, they should have suitable fall protection as necessary utilize an appropriate anchorage point
- In addition to the above fall protection requirements, when erecting and dismantling shoring, a minimum of two scaffold grade planks should be used or other similar means, such as mobile scaffolding, lifts, etc. Planks should rest on horizontal frame members and not on cross bracing.
- The use of positioning systems as a sole means of fall protection is not permissible.

For additional information on fall protection requirements, refer to the Elevated Work Appendix.

Formwork/False work

General Guidelines

- Formwork, false work and shoring should be designed, fabricated, erected, supported, braced and maintained so that it will be capable of supporting without failure all vertical and lateral loads that may reasonably by anticipated to be applied to the formwork. Formwork which is designed, fabricated, erected, supported, braced and maintained in conformance with ANSI A10.9-1983 Construction and Demolition Operations – concrete and masonry work, will be deemed to meet the requirements of this paragraph.

- Drawings or plans, including all revisions, for the jack layout, formwork (including shoring equipemt0, working decks, and scaffolds, should be available at the jobsite.
- Procedures for safe installation, removal, lifting etc., should be available at the jobsite and all workers appropriately trained in these procedures as applicable.
- Work areas should be clear of all unauthorized personnel during installation, concrete placement and removal. Appropriate barricading, delineation and/or signage should be placed to limit access and alert other workers of hazards associated with the work area.
- At no time should workers place themselves underneath a live load.
- When hoisting material, the worker should be positioned to the side of the hoisted material and never into the pinch point between the hoisting equipment and the material or in the area where an operator would land material in the event of an emergency.
- Appropriate tag lines should be utilized as required and two tag lines may be necessary to help align/control panels or forms.
- Safe means of access and egress should be maintained at all times.

Removal

- Forms and shores (except those used for slabs on grade and slip forms) should not be remove until the employer determines that the concrete has gained sufficient strength to support its weight and superimposed loads. Such determination should be based on compliance with one of the following:
    - The plans and specifications stipulate conditions for removal of forms and shores, and such conditions have been followed, or
    - The concrete has been properly tested with an appropriate ASTM standard test method designed to indicate the concrete compressive strength, and the test results indicate that the concrete has gained sufficient strength to support its weight and superimposed loads.
- Prior to dismantling, the entire system should be inspected to determine if there are any hazards from displacement, weakening, alterations etc. of the shoring and false work.
- Shores, cross braces etc. should only be removed in the immediate work areas and as appropriate.
- All nails should be removed or bent over immediately upon stripping.
- Shoring, formwork and all other equipment being removed should be stacked, consolidated or placed in an orderly manner as soon as practicable during the removal operation and egress/access paths maintained at all times.
- Only appropriate tools should be used for removal of shoring and formwork. i.e. pry bars, cats paws, tec. versus the claw end of hammers, screwdrivers etc.

Shoring and Reshoring

General Guidelines

- All shoring and reshoring operations should comply with all federal, state local and manufactures regulations.
- All shoring equipment (including equipment used in reshoring operations) should be inspected prior to erection to determine that the equipment meets the requirements specified in the formwork drawings.

- Shoring equipment found to be damaged, severely rusted, missing locking devices etc. should not be used for shoring. Shoring equipment that is in place and is found to be damaged or weakened, should be immediately reinforced.
- Erected shoring equipment should be inspected immediately prior to, during and immediately after concrete placement.
- The sills for shoring should be sound, rigid and capable of carrying the maximum intended load.
- Base plates should be attached to a minimum of 12’ square, 2” plywood or equivalent.
- All base plates, shore heads, extension devices, and adjustment screws should be in firm contact, and secured when necessary, with the foundation and the form.
- Existing ground should be level, adequately compacted and loads distributed. Consideration should be given to adverse weather conditions such as washouts, rain impact to slopes etc. Special precautions such as hardwood wedges or bracing should be utilized on sloped surfaces.
- All clamps, screws, pins and other similar components should be in a closed or engaged position.
- Eccentric loads on shore heads and similar members are prohibited unless these members have been designed for such loading. Ensure stringers are centered on these members to minimize eccentric loading.
- Adequate access should be provided to all form deck surfaces. If access ladders are required these should be secured and extend at least 36” above the form deck surface.
- When horizontal shoring is required, these should be engineered and special consideration should be given to installation and conformance to the completed design.
- Ensure all stringers and joists are fully supported and centered over shoring heads/top plates and adequately secured. Further, ensure that all stringers and joists are fully upright and not rolled.
- All horizontal shoring should be installed and erected in compliance with manufacture’s requirements as well as federal, state and local regulations.

Frame Shoring

- The design of the shoring should be prepared by a qualified designer and the erected shoring should be inspected by an engineer qualified in structural design.
- The shoring design or layout drawing should be followed with no omissions of required components, or alteration in frame spacing’s, types used, towers heights, locations or sizes.
- Shoring loads should be carried on all legs.
- All shoring fames should be plumb and level. This should be checked and corrected at a minimum of during erection and just prior to the pour. Adjustment of shoring frames should not be made once the pour begins.
- When shoring height exceeds a minimum of four (4) times the minimum base width, additional bracing and securing of the frames should be performed.
- Cross braces should never be climbed and workers should climb frames from the inside.

Screw Jacks

- Screw jacks should not exceed the manufactures recommended extension height at any time.

- Screw jack extension should be kept to a minimum for maximum load carrying capacity.
- All screw jacks should be in firm contact with the foundation and frame legs.

Post Shoring

- The single post shores should be vertically aligned/plumbed. This should be checked and corrected at a minimum of during erection and just prior to the pour.
- Adjustment of post shores for any reason, including but not limited to raising formwork, should not be made once the pour begins.
- Refer to the manufacture's guidelines for additional stability measures and bracing requirements of each system used.
- Post shores should be adequately secured at top and bottom to prevent displacement.
- Whenever single post shores are used one on top of the other (tiered), they should comply with the following specific guidelines in addition to the general guidelines for formwork:
    - The single post shores should be spliced to prevent misalignment.
    - The single post shores should be adequately braced in two mutually perpendicular directions at the splice level.
    - Each tier should also be diagonally braced in the same two directions.

Ellis Shores

- Ensure shores are erected with the proper length of timbers allowing a minimum of 24" overlap between shore members.
- The shore clamps should be attached 12" apart with the upper clam at a minimum of 2" form the top of the lower shore. Each clamp should be secured with the appropriate number of type of duplex nails.
- Shores should be raised to the desired height by sliding the upper shore member upwards being careful to avoid pinch points.
- Shore hand jacks should not be used to raise decks, lift formwork or elevate concrete.
- Ensure all shores, jacks and clamps are inspected prior to use and any damaged or defective materials are removed or repaired prior to use.
- Safety nails should be secured above each clamp of the upper shore member casting to prevent uplift or movement during vibration.

Reshoring

- Shores should not be removed, including cross bracing, until the concrete has gained sufficient strength to support its weight and superimposed loads. Such determination shall be based on compliance with one of the following:
    - The plans and specifications stipulate conditions for removal of forms and shores, and such conditions have been followed, or
    - The concrete has been properly tested with an appropriate ASTM standard test method designed to indicate the concrete compressive strength, and test results indicate that the concrete has gained sufficient strength to support its weight and superimposed loads.

- Stripping and removal of shoring equipment should be performed in conformance to the approved stripping sequencing plan.
- Reshoring should be erected, as the original forms and shores are removed, whenever the concrete is required to support loads in excess of its capacity.
- The design of the shoring should be prepared by a qualified designer and the erected shoring should be inspected by an engineer qualified in structural design.
- The shoring design or layout drawing should be followed with no omissions of required components, or alterations in spacing's, types used, heights, locations or sizes.
- Reshoring should not be removed until the concrete being supported has attained adequate strength to support its weight and all loads in place upon it.
- Reshores should be placed directly below load carrying legs to avoid punch through, stress reversals or other undesirable forces on the poured concrete.
- Slabs or beams should be allowed to take their permanent deflection before final adjustment of reshoring equipment is made.
- Horizontal shoring should never be used as part of a reshoring system.

Bracket Scaffolds

- Bracket scaffolds should only be used when through bolted walls, with at least 5/8" diameter bolts.
- Scaffolds should be solidly secured to the walls or the supporting structure.
- Scaffolds should be able to support at least 4 times the maximum intended working load.
- Spacing of brackets should not be greater than 10' apart.
- Railings should be installed on all scaffolds 6' or greater in height.
- Platforms should consist of at least two 2"x10" planks that extend at least 6" over each bracket and no more than 18".
- Platforms should be solidly planked with no more than 7" gap under the back rail and 14" gap to the face of the form.
- Planking should be scaffold grade lumber or equivalent and should be free from damage, defects, cracks, splits etc. Damaged planks should not be used.

Reinforcing Steel

- All protruding reinforcing steel, onto and into which employees could fall, should be guarded to eliminate the hazard of impalement. When working at grade, impalement hazards from 4" to 6' in height, at a minimum, should be protected.
- Reinforcing steel for walls, piers, columns, and similar vertical structures should be adequately supported to prevent overturning and to prevent collapse.
- Employers should take measures to prevent unrolled wire mesh form recoiling. Such measures may include by are not limited to securing each end of the roll or turning over the roll.
- Reinforcing steel should be stockpiled as close as practicable to work areas. Additionally special attention should be taken towards access and egress to work areas, excavations and ensuring work areas are free from tripping hazards or other surface encumbrances.

Concrete Placement and Finishing

General

- Appropriate PPE should be utilized during concrete placement. This includes but is not limited to; safety glasses, fall protection, gloves, boots, hardhat, and long sleeves. Refer to the Personal Protective Equipment appendix for more information.
- Appropriate respiratory protection should be used for all concrete cutting, grinding, sanding, and blasting, scabbling, dry mixing, jack hammering etc. operations or any other operation involving respiratory hazards. Refer to the Respirator Protection Appendix for more information.
- When discharging concrete on a slope, the wheels of ready-mix trucks should be blocked, the brakes set to prevent movement and the operator with the vehicle at all times.
- All washout activities should be completed in the designated washout area.
- All concrete cutting, finishing and cleanup should be done in such a manner that all residue or waste water will be properly contained and disposed of.
- Appropriate precautions should be taken for specialty applications (e.g. acid washing, dyes, stains etc.); in their handling, storage use and disposal.
- Powered and rotating type concrete troweling machines that are manually guided should be equipped with a control switch that will automatically shut off the power whenever the hands of the operator are removed from the equipment handles.
- Bull float handles used where they might contact energized electrical conductors, should be constructed of nonconductive material or insulated with nonconductive sheath that's electrical and mechanical characteristics provide the equivalent protection of a handle constructed of nonconductive material.
- Masonry saws should be guarded with a semicircular enclosure over the blade.
- When operation air guns for cleaning off decks, inside forms etc., these guns should have a maximum of 30 psi nozzle pressure and be equipped with a safety release valve.
- Air guns should have pressure valves, and extension tube and the hoses well maintained with appropriate whip checks.
- Employee operating air guns should have appropriate PPE, including but not limited to, chip protection (i.e. face shield, goggles etc.), ear plugs and respiratory protection as required.
- No employee should be permitted to perform maintenance or repair activity on equipment (such as compressors mixers, screens, pumps used for concrete and masonry construction activities) where the inadvertent operation of the equipment could occur and cause injury, unless all potentially hazardous energy sources have been locked out and tagged.

Concrete Buckets

- No employee shall be permitted to ride concrete buckets.
- No employee should be permitted to work under concrete buckets while buckets are being elevated or lowered into position.

- To the extent practical, elevated concrete buckets should be routed so that no employee or the fewest number of employees are exposed to the hazards associated with falling concrete or falling buckets.
- Concrete buckets equipped with hydraulic or pneumatic gates should have positive safety latches or similar safety devices installed to prevent premature or accidental dumping.
- Concrete buckets should e designed to prevent concrete from hanging up on top of the sides.

Pumpcrete Systems

- No employee should be permitted to apply a cement, sand and water mixture through a pneumatic hose unless the employee is wearing appropriate personal protective equipment.
- Concrete pumping systems using discharge pipes should be provided with pipe supports designed for 100 percent overload.
- Compressed air hoses used on concrete pumping systems should be provided with positive failsafe joint connectors to prevent separation of sections when pressurized.
- Movement of concrete hoses should be planned to limit the amount of manual positioning of hose as much as practicable. When necessary, the use of hooks, ropes or other similar devices should be utilized when handling the concrete hose.

Buggies and Wheelbarrows

- Concrete buggy handles should not extend beyond the wheels on either side of the buggy.
- Handles should be guarded or equipped with knuckle guards.
- All buggies, wheelbarrows or other similar conveyances should be properly maintained and repaired/replaced immediately if damaged, in poor repair or otherwise.
- Paths of access and travel should be level, free of debris and other surface encumbrances and ramps or other access ways should be appropriately built, maintained, and protected.
- Buggies, wheelbarrows etc. should not be overloaded.

Post-Tensioning Operations

- No employee (except those essential to the post-tensioning operations) should be permitted to be behind the jack during post-tensioning operations.
- Signs and barriers should be erected to limit employee access to the post-tensioning area during tensioning operations.
- Appropriate fire protection measures should be taken during burning operations, including by not limited to spark control or blankets, fire extinguishers, wetting formwork etc.

Emergency Response Procedures

In the event of a collapse or failure of formwork, false work or an excavation, the following general emergency procedures should be initiated:

Initial Stage of a collapse (before rescue recovery)

- Get other exposed individuals out of the area.
- Call 911
- Secure the area

- Shut down all equipment that might cause vibration (with the exception of dewatering equipment) or additional loading. Reroute traffic to eliminate vibration if necessary.
- Do not enter a failed excavation or area of collapse without adequate protection
- Do not remove hand tools, personal protective equipment, or other material from the scene that may be used to locate a victim.
- Begin removing standing or seeping water
- Find out if the failure damaged a utility. If so, take appropriate action.
- Consider tying a digging tool to a rope and tossing it t a conscious and able victim so that he or she may dig out without having another person enter the excavation.
- Account for everyone
- Follow standard emergency procedures as detailed in the Crisis Management Plan.

Rescue or recovery

- Do not attempt to pull a partially trapped/buried victim out by a rope or sling. This may cut the victim in half or pull limbs from the body. It may also loosen dirt or material enough to create a secondary cave-in/collapse.
- If equipment is used to remove material from around a victim, remove/dig so that loosened material will fall away rather than toward the victim. It is generally bad practice to use equipment to dig someone out because the vibration and surcharge can cause further failures. In the case of an excavation, a better option might be to locate and use a vacuum truck.
- Assist all emergency response personnel as needed.
- Ensure that adequate equipment is available for a sustained rescue effort (e.g. shoring materials, equipment, generator, lighting, supplies, personnel etc.)
- Control traffic and crowds. Reroute traffic as necessary.

Permitting/Documentation

Before a contractor is on site, the following items should be obtained in writing:

- Permit for excavation/trenching activities (Cal OSHA Excavation Notification Form as applicable) for all trenches/excavations that are equal to or greater than 5’ in depth where an employee is required to enter.
- Permit for any false work or scaffolding 36’ in height or greater total.
- Excavation and trenching plan
- Shoring/False work design or plan
- Name(s) of competent person(s)
- Soils analysis report
- Copy of their Safety Manual

FORMS

MANAGEMENT INSPECTION REPORT

Job #

Job Location/Name

Date
Month / Day / Year

Time

Jobsite Supervisor
Last First

Safety Manager
Last First

Webcor/Obayashi Joint Venture Principal
Last First

Insurance Representative
Last First

X – Corrective Action Required ☐

O – No Corrective Action Required ☐

	WEBCOR/ OBAYASHI	SUB	N/A	CORRECTED
1. PERSONAL PROTECTIVE EQUIPMENT				
1. Hard Hats				
2. Eye Protection				
3. Ear Protection				
4. Respirators				
5. Proper Clothing				
6. Footwear				
7. Safety Belts				
2. HOUSEKEEPING				
1. Exits & Stairs Clear				
2. Piling & Stacking				
3. Debris Removal				
4. Nails Bent or Removed				
3. LADDERS & STAIRS				
1. Ladder Condition				
2. Ladders Tied Off				
3. Ladder 3' Above Landings				
4. Stairs				
4. RAILINGS / FLOOR OPENINGS				
1. Perimeter				
2. Floor Openings / Shafts				
3. Stairs / Ramps				
4. Walkways				
5. Elevator Door Openings				
5. SCAFFOLDS				
1. Railings & Kickboards				
2. Tied to Building				
3. Planks & Platforms				
6. ELECTRICAL				
1. Lighting				
2. Grounding				
3. Cords, Plugs & Receptacles				

	WEBCOR/ OBAYASHI	SUB	N/A	CORRECTED
7. FIRE PROTECTION				
1. Extinguishers				
2. Flammable Materials				
3. Welding / Cutting Equipment				
8. TOOLS				
1. Condition				
2. Guarded				
3. Power Cords				
4. Temp. Power Boxes				
9. SITE & PUBLIC PROTECTION				
1. Excavation / Trenches				
2. Earth Moving Equipment				
3. Forklift / Cranes				
4. Fences				
5. Lighting				
6. Barricades				
7. Signage				
8. Rebar Caps				
10. FIRST AID				
1. Trained Personnel				
2. Kits / Supplies				
3. Sanitation / Water				
11. PROGRAM / INFORMATION				
1. Twice Daily Inspections				
2. Orientation: New Employee / Haz. Sub.				
3. Safety Meetings				
4. Required Signs Posted				
12. OTHER (LISTS)				
1. Safety Manual				
2. MSDS Book				
3. CAL-OSHA 200 Log (Posted Every February)				

Comments:

Title / Signature:

DAILY PROJECT INSPECTION

Job #

Job Location/Name

Week Ending
Month / Day / Year

X – Corrective Action Required ☐ ***O*** – No Corrective Action Required ☐

	M	T	W	T H	F	COMMENTS
A. BASICS						
1.Workers are wearing personal protective equipment						
2.exits and stairways are clear						
3.Construction material stored properly						
4.Site debris removed						
5.Nails bent or removed						
6.Ladder condition and placement						
7.Permanent & temporary rails						
8.Cylinder storage						
9.Hazardous material storage						
10.Electrical Cords and grounding						
11.Extinguishers in place where needed						
12.Excavation / trenches						
13.First aid kit is accessible & stocked						
14.Required signs posted						
15.Construction equipment						
B. CRANES						
1.Crane certification						
2.Load chart						
3.Operator maintenance reports updated						
C. MANLIFT						
1.Ramps, rails, phones & doors are maintained properly						
2.Personnel stretcher stored on top of the man lift						
3.Fire extinguisher in place						
4.Weekly maintenance check reports						
D. BACKHOES						
1.Back-up bell working						
2.Wearing safety equipment						
3.Personnel working with the backhoe a safe distance from the backhoe bucket at all times						
E. TRUCKS						
1.Back-up bell working						
2.Driver wearing safety equipment						
F. COMPRESSOR						
1.Properly maintained						
2.Air tools working properly						
3.Personnel wearing correct safety equipment and have been instructed how to use the equipment						
4.All air hose connectors are wired together						
G. **SHORING / SCAFFOLDING**						
1.Railings & kick boards						
2.Tied off / braced correctly						
3.Planking is the correct size						

Supervisor _____
Last First

EQUIPMENT SAFETY INSPECTION CHECKLIST

Date: _____

Project: _____

Equipment: _____

All guards and fenders	_____	OK	_____	Needs Repair
Brakes	_____	OK	_____	Needs Repair
Lights – front, rear, side, dash	_____	OK	_____	Needs Repair
Back-up alarm – horn	_____	OK	_____	Needs Repair
Ladders, stairs, hand holds	_____	OK	_____	Needs Repair
ROPS (Roll-over protection)	_____	OK	_____	Needs Repair
Seat belts	_____	OK	_____	Needs Repair
Fire extinguisher	_____	OK	_____	Needs Repair
Glass	_____	OK	_____	Needs Repair
Tires	_____	OK	_____	Needs Repair
Electrical cords	_____	OK	_____	Needs Repair
Ground fault circuit interrupters	_____	OK	_____	Needs Repair
Electrical hand tools	_____	OK	_____	Needs Repair
Powder actuated tools	_____	OK	_____	Needs Repair
Pneumatic condition of all hand tools	_____	OK	_____	Needs Repair

<u>Other Items Checked:</u>

Oil level and leaks	___	OK	___	Needs Repair	___	Add	___	Change
Hydraulic oil level and leaks	___	OK	___	Needs Repair	___	Add	___	Change
Anti-freeze level and leaks	___	OK	___	Needs Repair	___	Add	___	Change
Fuel level and leaks	___	OK	___	Needs Repair	___	Add	___	Change
First aid kit	___	OK	___	Needs Repair	___	Add	___	Change

Repaired by: _____

Checked by: _____

JOB HAZARD ANALYSIS

JOB HAZARD ANALYSIS		JOB TITLE (and number if applicable):	PAGE ____ OF ____ JHA NO. ____	DATE:	☐ NEW ☐ REVISED
COMPANY ORGANIZATION:		LOCATION:		DEPARTMENT:	
TITLE OF PERSON WHO DOES JOB:	SUPERVISOR:	REQUIRED AND / OR RECOMMENDED PERSONAL PROTECTIVE EQUIPMENT:			
ANALYSIS BY:		REVIEWED BY:		APPROVED BY:	
GENERAL INSTRUCTIONS:					
OPERATIONS SEQUENCE:	EQUIPMENT, TOOLS AND ALL FACILITIES INVOLVED:	POTENTIAL HAZARDS:	RECOMMENDED ACTION OR PROCEDURE		PAGE/SECTION REFERENCE FROM SUBCONTRACTOR IIPP:

WELDING / CUTTING "HOT WORK" PERMIT

Permit #_____
Date: _____

Subcontractor:_____

Floor:_____ Room:_____
Area:

CONDITIONS FOR PERFORMANCE OF THE WORK

1. A Designated Fire Watch shall be furnished by the subcontractor performing the work. The Fire Watch shall have no other assigned duties but to ensure a Safe environment in the area during and after the activity of welding, cutting, or open-flame operations.
2. The Fire Watch shall clear the work area, and ensure that it be kept free, of all combustible materials. In occupied buildings, the fire suppression system shall be in operation.
3. Fire-retardant tarpaulins are acceptable and shall be used where applicable.
4. All welding/cutting equipment shall be removed from the building daily. This provision applies to work performed in an existing, occupied portion of the facility.
5. The Fire Watch shall be equipped with appropriate personal protective equipment, such as eye protection, gloves, head protection, welder's jacket, etc.
6. Equipment shall be located so that exhaust fumes are naturally ventilated from the building. Where such locations are not possible, mechanical ventilation shall be provided by the subcontractor performing the work.
7. All oxygen/acetylene equipment shall be transported, used, and stored in strict compliance with WISHA Construction Safety Orders. A separate fire extinguisher (10 B: C minimum) is required at each oxygen/acetylene setup.
8. Appropriate fire extinguishers shall be kept in the work area while all work is in progress. Fire extinguishers are to be provided by the subcontractor performing the work as follows:

WORK AREA	FIRE EXTINGUISHER TYPE	NUMBER REQ'D
Equipment Spaces	ABC (20 lbs)	2
Other Spaces	ABC (20 lbs)	1

9. Welding/cutting shall not be performed until the area has been approved by the Fire Safety Manager.
10. Upon completion of the "Hot Work," the Fire Watch shall inspect the work area and ensure that there are no lingering sparks, smoldering materials, etc. The fire watch shall be maintained a minimum of ½ hour after work has been completed.

11. The Fire Safety Manager shall be notified when the “Hot Work” is complete.

12. Permits are valid for a one (1) week period.

Subcontractor hereby agrees to perform the work in accordance with the requirements noted above.

Permit valid from _____ to _____.

Comments/Special Requirements:

Subcontractor’s Representative:_____ Work Complete: _____

Fire Safety Manager:_____ Work Complete: _____

HEAT ILLNESS PREVENTION POLICY

Purpose

The purpose of Heat Illness Prevention Policy is to meet the requirements set forth in the Heat Illness Prevention Standard, Title 8, California Code of Regulations, Section 3395 and also to serve as a supplement to Webcor/Obayashi Joint Venture's Injury and Illness Prevention Program (IIPP). This information is intended and must be used in conjunction with the IIPP. The Heat Illness Prevention Policy establishes procedures and provides information which is necessary to ensure that Webcor/Obayashi Joint Venture's staff is knowledgeable in the prevention and recognition of heat illness to ensure their own safety and the safety of others.

Procedures and Guidelines

In compliance with Heat Illness Prevention Standard, Title 8 regulations, Webcor strives to provide a safe and healthful work environment. To do so the following Procedures are required for all employees of Webcor/Obayashi Joint Venture:

- Provide training to all employees by their supervisors. All trainings should be documented with an employee sign in sheet. Topics include:
    - Types of Heat Illness and their symptoms.
    - Environmental and personal risk Factors for Heat Illness.
    - Webcor/Obayashi Joint Venture's Heat Illness Prevention Policy.
    - The importance or drinking water frequently throughout the day.
    - The importance of reporting symptoms of Heat Illness to their employer/supervisor
    - The importance of allowing the body to adjust gradually to working in high heat.
    - Webcor Procedures for responding to Heat Illness symptoms.
    - Webcor/ Obayashi's Procedures for contacting emergency services.
    - Webcor/Obayashi Joint Venture's Procedures for emergency communication.
- Provide training to all Supervisors. Topics include:
    - All information to be provided to employees.
    - The procedures the supervisor is to follow in implementing this Policy.
    - The Procedures to follow when an employee's begins to show symptoms of heat illness.
- Webcor /Obayashi Joint Venture is to provide access to potable drinking water meeting the requirements of Sections 1524, 3363, and 3457 as applicable to all employees. Where it is not plumbed or otherwise continuously supplied, it shall be provided in sufficient quantity at the beginning of the work shift to provide one quart per employee per hour for drinking for the entire shift. Employers may begin the shift with smaller quantities of water if they have effective procedures for replenishment during the shift as needed to allow employees to drink one quart or more per hour. The frequent drinking of water shall be encouraged.
- Webcor/Obayashi Joint Venture is to provide access to an area with shade that is either open to the air or provided with ventilation or cooling for a period of no less than five minutes for employees suffering from heat illness or believing a preventative recovery period is needed. Such access to shade shall be permitted at all times.

- During the designated warmer months of the year (April through September) all jobsites are required to incorporate heat illness prevention and awareness training into the Tailgate Safety Meetings. Shade and plenty of water shall be provided in sufficient amount to each and every employee.

Heat Illness Prevention

Heat related illnesses are avoidable if the employees are trained and the right actions are taken before, during, and after working in either indoor or outdoor hot conditions. High temperatures, humidity, air velocity and radiant heat from the sun or a furnace can stress the body's ability to cool itself making heat illness a big concern during hot weather months. These would be considered environmental risk factors. Every employee whose job duties require them to work in the outdoors during summer months, are exposed to elevated heat conditions and therefore are susceptible to heat illness. The three major forms of heat illnesses are: **heat cramps**, **heat exhaustion**, and **heat stroke**. Heat stroke can be a life threatening condition. This document will outline those actions as well as describing the three major forms of heat illness, how to recognize them, and what an action to take to provide first aid before medical care is provided.

- Heat Cramps
    - Description:
      Heat cramps are the most common type of heat related injury and probably have been experienced by nearly everyone at one time or another. Heat cramps are muscle spasms which usually affect the arms, legs, or stomach. Frequently they do not occur until sometime later after work, at night, or when relaxing. Heat cramps are caused by heavy sweating, especially when water is not replaced quickly enough. Although heat cramps can be quite painful; they usually don't result in permanent damage.
    - Prevention/First Aid:
      Drink electrolyte solutions such as Gatorade or plenty of water during the day and try eating more fruits such as bananas to help keep your body hydrated during hot weather. Call 911 and contact your supervisor immediately if the Person becomes ill.

- Heat Exhaustion
    - Description:
      Heat exhaustion is more serious than heat cramps. It occurs when the body’s internal temperature regulating system is overworked, but has not completely shut down. In heat exhaustion, the surface blood vessels and capillaries, which originally enlarged to cool the blood, collapse from loss of body fluids and necessary minerals. this happens when you do not drink enough fluids to replace what you are sweating away symptoms Include: Headache, heavy sweating, intense thirst, dizziness, fatigue, loss of coordination, nausea, impaired judgment, loss of appetite, hyperventilation, tingling in hands or feet, Anxiety, cool moist skin, weak and rapid pulse (120-200), and low to normal blood
    - Prevention/First Aid**:**
      The employee suffering these symptoms should be moved to a cool location such as a shaded area or air-conditioned building. Have them lie down with their feet slightly elevated. Loosen their clothing, apply cool, wet clothes or fan them. Have them drink water or electrolyte drinks. Try to cool them down, and have them checked by medical personnel. Victims of heat

exhaustion should avoid strenuous activity for at least a day, and they should continue to drink water to replace lost body fluids. Call 911 if the person becomes non-responsive, refuses water, vomits, or loses consciousness.

- Heat Stroke
  - Description:
    Heat stroke is a life threatening illness with a high death rate. It occurs when the body has depleted its supply of water and salt, and the victim's core body temperature rises to deadly levels. A heat stroke victim may first suffer heat cramps and/or heat exhaustion before progressing into the heat stroke stage, but this is not always the case. It should be noted that, on the job, heat stroke is sometimes mistaken for a heart attack. It is therefore very important to be able to recognize the signs and symptoms of heat stroke and to check for them anytime an employee collapses while working in a hot environment. Symptoms of heat stroke include: A high body temperature (103 degrees F); a distinct absence of sweating (usually); hot red or flushed dry skin; rapid pulse; difficulty breathing; constricted pupils; any/all the signs or symptoms of heat exhaustion such as dizziness, headache, nausea, vomiting, or confusion, and possibly more severe systems including; bizarre behavior; and high blood pressure. Advance symptoms may be seizure or convulsions, collapse, loss of consciousness and a body temperature of over 108 degrees F.
  - Prevention/First Aid**:**
    It is vital to lower a heat stroke victim's body temperature. Quick actions can mean the difference between life and death. Pour water on them, fan them, or apply cold packs. Call 911 to get the person medical aid as soon as possible.

Guidelines for Preventing Heat Illness

- If you are coming back to work from an illness or an extended break or you are just starting to a job working in the heat, it is important to be aware that you are more vulnerable to heat stress until your body has time to adjust. Let your supervisor know you are not used to the heat. It takes about 5 – 7 days for your body to adjust.
- Drinking plenty of water frequently is vital to workers exposed to the heat. An individual may produce as much as 2 to 3 gallons of sweat per day. In order to replenish that fluid the worker should drink 3 to 4 cups of water every hour starting at the beginning of your shift.
- Taking your breaks in a cool shaded area and allowing time for recovery from the heat during the day are effective ways to avoid heat illness.
- Avoid or limit the use of alcohol and caffeine during periods of extreme heat. Both dehydrate the body.
- If your or a co-worker start to feel symptoms such as nausea, dizziness, weakness or unusual fatigue, let your supervisor know and rest in a cool shaded area. If symptoms persist or worsen seek immediate medical attention.
- Whenever possible ear clothing that provides protection from the sun but allows airflow to the body. Protect your head and shade your eyes if working outdoors.
- When working in the heat be sure to pay extra attention to your coworkers and be sure you know how to call for medical attention.

END OF SITE SPECIFIC SAFETY PLAN

Project ID: 30100-00

Print Date: 03-Aug-12

Project Schedule: TTC - LIVE

TRANSBAY TRANSIT CENTER

EXHIBIT I

TG05.3 CONCEPT SUMMARY SCHEDULE

Activity Name	Orig. Dur.	Start	Finish
TTC - LIVE	1014	09-Aug-12	15-Sep-16
PRECONSTRUCTION	74	09-Aug-12	27-Nov-12
TRADE GROUP PLANNING AND IFB PROCESS	74	09-Aug-12	27-Nov-12
TG05 - SITE LOGISTICS PKG	74	09-Aug-12	27-Nov-12
TG05.3 PERSONNEL & MATERIAL HOIST	74	09-Aug-12	27-Nov-12
TG05.3 - PROPOSAL & AWARD PROCESS (RFP)	74	09-Aug-12	27-Nov-12
ISSUE PROPOSAL PACKAGE AND RECEIVE SUBMISSION - TG05.3	26	09-Aug-12	14-Sep-12
PRE-PROPOSAL MEETING - TG05.3	1	16-Aug-12	16-Aug-12
QPD'S DUE	1	27-Aug-12	27-Aug-12
PREP AND POST RESPONSE TO QPD'S	8	28-Aug-12	07-Sep-12
RFP PERIOD CLOSED - TG05.3	1	14-Sep-12	14-Sep-12
FINAL TRADE SUBCONTRACTORS SCORED AND NOTIFIED	8	17-Sep-12	26-Sep-12
FINALIST INTERVIEWS/SUBMISSIONS	3	02-Oct-12	04-Oct-12
ENTER INTO NEGOTIATIONS - TG05.3	1	04-Oct-12	04-Oct-12
RFP PROTEST PERIOD - TG05.3	5	05-Oct-12	12-Oct-12
TJPA BOARD APPROVAL - TG05.3	1	08-Nov-12	08-Nov-12
TJPA - NOTICE TO PROCEED - TG05.3	2	09-Nov-12	13-Nov-12
ISSUE & EXECUTE CONTRACT FOR SITE LOGISTICS (NTP) TG05.3	8	14-Nov-12	27-Nov-12
CONSTRUCTION	940	28-Nov-12	15-Sep-16
TRANSBAY CENTER BUILDING	940	28-Nov-12	15-Sep-16
PROJECT MANAGEMENT	85	28-Nov-12	03-Apr-13
PROCUREMENT	75	28-Nov-12	20-Mar-13
TG05.3 - PERSONNEL AND MATERIAL HOIST	75	28-Nov-12	20-Mar-13
SHOP DRAWINGS/PRODUCT DATA - TG05.3	35	28-Nov-12	22-Jan-13
PROCUREMENT/FABRICATION - ALLOWANCE - TG05.3	40	23-Jan-13	20-Mar-13
START OF CONSTRUCTION/MOBILIZE	10	21-Mar-13	03-Apr-13
TG05.3 - PERSONNEL AND MATERIAL HOIST	10	21-Mar-13	03-Apr-13
MOBILIZATION - TG05.3	10	21-Mar-13	03-Apr-13
FIELD WORK	830	09-May-13	15-Sep-16
BELOW GRADE STRUCTURE	830	09-May-13	15-Sep-16
ZONE 1 (AREAS 1-3 / BUILDING LINES 1 TO 9.5) BELOW GRADE STRUCTURE	671	09-May-13	28-Jan-16
AREA 1: LINES 1 TO 3.5	1	09-May-13	09-May-13
AREA 1: MAT POUR	1	09-May-13	09-May-13
MAT POUR (#1) PLACE & FINISH TRAIN BOX - ZONE 1	1	09-May-13	09-May-13
APPURTANENCES	5	22-Jan-16	28-Jan-16
HOIST #1 BLOCKOUT POUR BACK	5	22-Jan-16	28-Jan-16
ZONE 2 (AREAS 4-6 / BUILDING LINES 9.5 TO 18.5) BELOW GRADE STRUCTURE	629	12-Jul-13	28-Jan-16
AREA 5: LINES 12.5 TO 15.5	1	12-Jul-13	12-Jul-13
AREA 5: MAT POUR	1	12-Jul-13	12-Jul-13
MAT POUR (#5) PLACE & FINISH TRAIN BOX - ZONE 2	1	12-Jul-13	12-Jul-13
APPURTANENCES	5	22-Jan-16	28-Jan-16
HOIST #2 BLOCKOUT POUR BACK	5	22-Jan-16	28-Jan-16
ZONE 3 (AREAS 7-9 / BUILDING LINES 18.5 TO 24.5) BELOW GRADE STRUCTURE	672	04-Sep-13	19-May-16
AREA 8: LINES 20.5 TO 22.5	1	04-Sep-13	04-Sep-13
AREA 8: MAT POUR	1	04-Sep-13	04-Sep-13

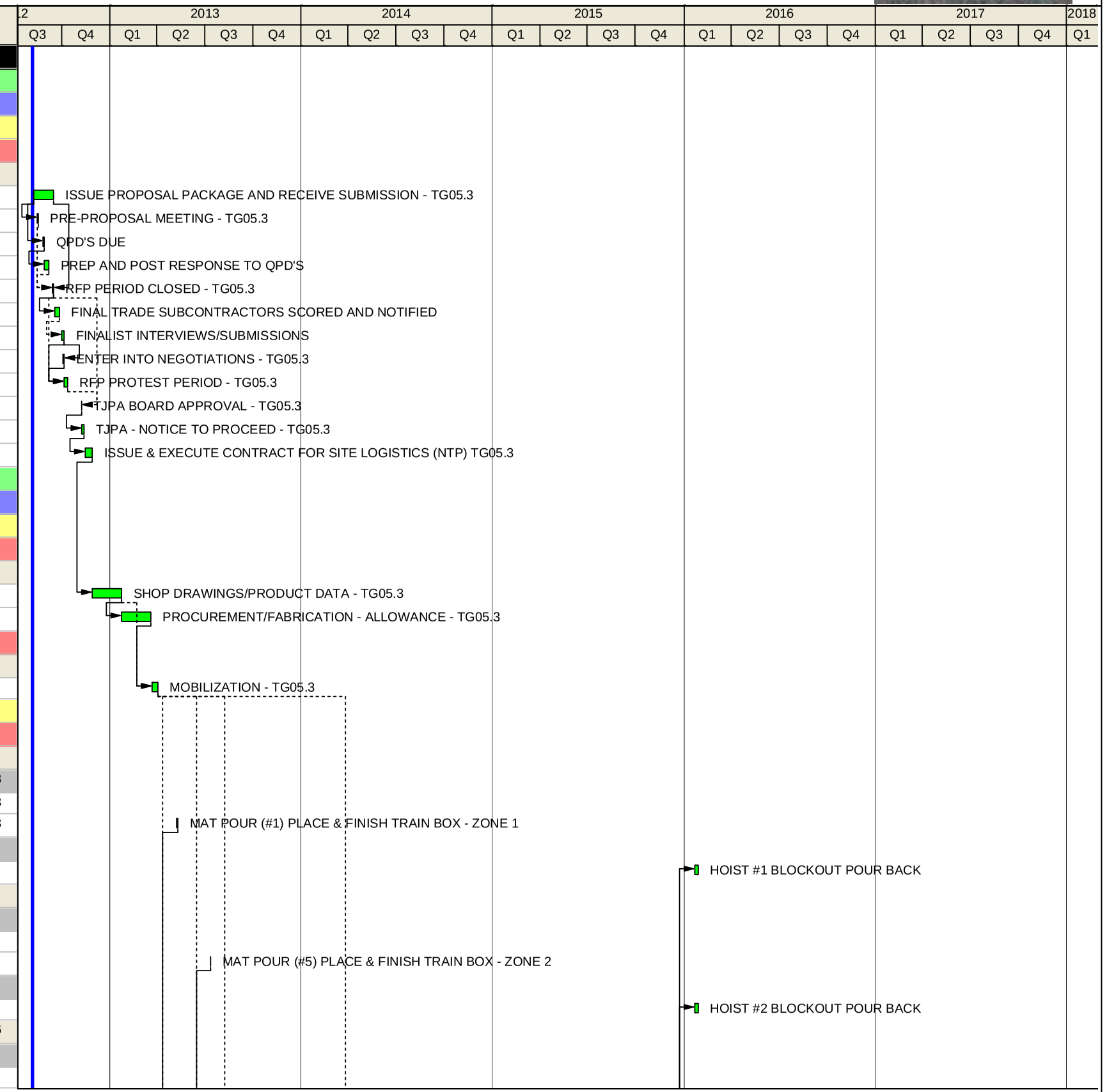

Data Date: 06-Aug-12

Checked By: DAVID HUNGERFORD

Project ID: 30100-00

Print Date: 03-Aug-12

Project Schedule: TTC - LIVE

TRANSBAY TRANSIT CENTER

EXHIBIT I

TG05.3 CONCEPT SUMMARY SCHEDULE

WEBCOR BUILDERS OBAYASHI JOINT VENTURE

Activity Name	Orig. Dur.	Start	Finish
MAT POUR (#8) PLACE & FINISH TRAIN BOX - ZONE 3	1	04-Sep-13	04-Sep-13
APPURTANENCES	5	13-May-16	19-May-16
HOIST #3 BLOCKOUT POUR BACK	5	13-May-16	19-May-16
ZONE 4 (AREAS 10-13 / BUILDING LINES 24.5 TO 35.3) BELOW GRADE STRUCTURE	594	24-Apr-14	15-Sep-16
AREA 11: LINES 27.5 TO 30.5	1	24-Apr-14	24-Apr-14
AREA 11: MAT POUR	1	24-Apr-14	24-Apr-14
MAT POUR (#11) PLACE & FINISH TRAIN BOX - ZONE 4	1	24-Apr-14	24-Apr-14
APPURTENANCES	5	09-Sep-16	15-Sep-16
HOIST #4 BLOCKOUT POUR BACK	5	09-Sep-16	15-Sep-16
ABOVE GROUND SUPERSTRUCTURE	210	05-Sep-14	13-Jul-15
WEST ZONE (BUILDING LINES 1 - 10)	35	16-Dec-14	09-Feb-15
W1 ERECT STRUCT STEEL (BUILDING LINES 1 - 3)	35	16-Dec-14	09-Feb-15
STRUCTURAL STEEL WELDING W1 (SHIFT 2)	35	16-Dec-14	09-Feb-15
CENTRAL ZONE (BUILDING LINES 10 - 25)	135	05-Sep-14	25-Mar-15
C3 ERECT STRUCT STEEL (BUILDING LINES 13 - 15)	35	05-Sep-14	24-Oct-14
STRUCTURAL STEEL WELDING C3 (SHIFT 2)	35	05-Sep-14	24-Oct-14
C7 ERECT STRUCT STEEL (BUILDING LINES 21 - 23)	35	04-Feb-15	25-Mar-15
STRUCTURAL STEEL WELDING C7 (SHIFT 2)	35	04-Feb-15	25-Mar-15
EAST ZONE (BUILDING LINES 25 - 34)	35	21-May-15	13-Jul-15
E2 ERECT STRUCT STEEL (BUILDING LINES 27 - 29)	35	21-May-15	13-Jul-15
STRUCTURAL STEEL WELDING E2 (SHIFT 2)	35	21-May-15	13-Jul-15
VERTICAL TRANSPORTATION & STAIRS	824	10-May-13	08-Sep-16
CONSTRUCTION PERSONNEL & MATERIAL HOISTS	824	10-May-13	08-Sep-16
PERSONNEL & MATERIAL HOIST #1 @ AREA 1 (TB TO ROOF)	665	10-May-13	21-Jan-16
INSTALL FROM MAT FOUNDATION TO GROUND HOIST #1	10	10-May-13	23-May-13
INSPECTION - READY TO USE HOIST #1	1	28-May-13	28-May-13
(LOE) HOIST #1 OPERATIONAL	655	28-May-13	21-Jan-16
INSTALL FROM GROUND TO ROOF HOIST #1	5	10-Feb-15	17-Feb-15
DISMANTLE HOIST #1	10	07-Jan-16	21-Jan-16
PERSONNEL & MATERIAL HOIST #2 BTWN LINE 13 & 14 (TB TO ROOF)	623	15-Jul-13	21-Jan-16
INSTALL FROM MAT FOUNDATION TO GROUND HOIST #2	10	15-Jul-13	26-Jul-13
INSPECTION - READY TO USE HOIST #2	1	29-Jul-13	29-Jul-13
(LOE) HOIST #2 OPERATIONAL	613	29-Jul-13	21-Jan-16
INSTALL FROM GROUND TO ROOF HOIST #2	5	27-Oct-14	31-Oct-14
DISMANTLE HOIST #2	10	07-Jan-16	21-Jan-16
PERSONNEL & MATERIAL HOIST #3 BTWN LINE 20 & 21 (TB TO ROOF)	666	05-Sep-13	12-May-16
INSTALL FROM MAT FOUNDATION TO GROUND HOIST #3	10	05-Sep-13	18-Sep-13
INSPECTION - READY TO USE HOIST #3	1	19-Sep-13	19-Sep-13
(LOE) HOIST #3 OPERATIONAL	656	19-Sep-13	12-May-16
INSTALL FROM GROUND TO ROOF HOIST #3	5	26-Mar-15	01-Apr-15
DISMANTLE HOIST #3	10	29-Apr-16	12-May-16
PERSONNEL & MATERIAL HOIST #4 BTWN LINE 27 & 28 (TB TO ROOF)	588	25-Apr-14	08-Sep-16
INSTALL FROM MAT FOUNDATION TO GROUND HOIST #4	10	25-Apr-14	08-May-14
INSPECTION - READY TO USE HOIST #4	1	09-May-14	09-May-14
(LOE) HOIST #4 OPERATIONAL	578	09-May-14	08-Sep-16
INSTALL FROM GROUND TO ROOF HOIST #4	5	14-Jul-15	20-Jul-15
DISMANTLE HOIST #4	10	24-Aug-16	08-Sep-16

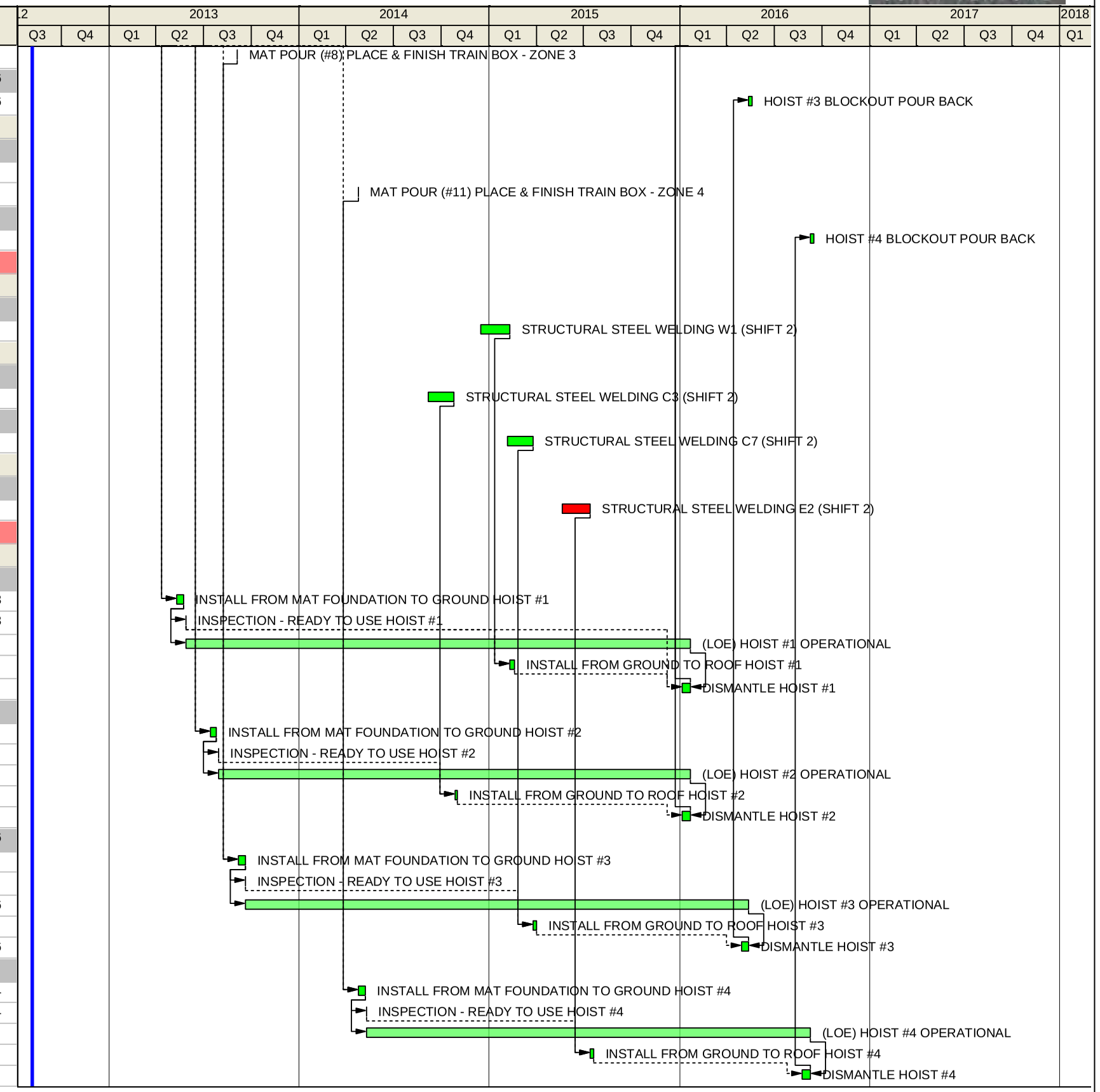

Data Date: 06-Aug-12

Checked By: DAVID HUNGERFORD

Transbay Transit Center

Webcor/Obayashi Joint Venture

Contractor Quality Control Program

for the

Transbay Transit Center Project

January 4, 2011 Rev 1.0
March 9, 2011 Rev 2.0
March 31, 2012 Rev 3.0

WEBCOR BUILDERS
OBAYASHI
JOINT VENTURE

WEBCOR/OBAYASHI JOINT VENTURE
CONTRACTORS QUALITY CONTROL PROGRAM
TRANSBAY TRANSIT CENTER PROJECT

INDEX

This Webcor/Obayashi JV Contractors Quality Control Plan will be developed incrementally as the trade packages are awarded and trade subcontractors are brought on board. Each trade subcontractors plan will become part of the Webcor/Obayashi JV's overall Contractor's Quality Control Plan and will be submitted to the Transbay Joint Power Authority as they are received

1. QUALITY CONTROL ORGANIZATION

- QUALITY CONTROL OVERVIEW
- DEFINITIONS
- ORGANIZATION CHART SHOWING LINES OF AUTHORITY

1. QUALITY CONTROL OVERVIEW

OVERVIEW

Project quality is the responsibility of all members of the project team and starts at the highest level of management. This Quality Management Plan details the specific processes by which the Project's quality will be managed and forms the basis upon which Webcor/Obayashi JV will ensure that all quality requirements for the Transbay Transit Center are met. The Plan integrates the quality management process into the Webcor/Obayashi JV organizational structure and construction management systems. Key elements of the plan include:

- The commitment of the Webcor/Obayashi JV Senior management to delivering a project that meets the Transbay Transit Center quality standards.
- Accepted project specific construction management policies, procedures and tools for the control of project information and the management of the construction documents, submittals and the work of the trade subcontractors.
- A Webcor/Obayashi JV project-specific quality plan that meets the TJPA and FTA quality requirements
- Trade Subcontractor, site specific, quality plans that meet TJPA and FTA quality requirements
- Consistent CQC staff oversight- the Webcor/Obayashi JV CQC Mangers or the Trade Subcontractors CQC Managers will have a physical presence on site when work is in progress.

FEDERAL TRANSIT ADMINISTRATION GUIDELINES

The Webcor/Obayashi JV Contractors Quality Management Plan incorporates the fifteen elements of the Federal Transit Administrations Quality Assurance and Quality Control Guidelines as appropriate for Webcor/Obayashi's scope of work.

1. *Management responsibility*
2. *Documented quality management system*
3. *Design control*
4. *Document control*
5. *Purchasing*
6. *Product identification and traceability*
7. *Process control*
8. *Inspection and testing*
9. *Inspection, measuring and test equipment*
10. *Inspection and test status*
11. *Non conformance*
12. *Corrective action*
13. *Quality records*
14. *Quality audits*
15. *Training*

DEFINITIONS:

- **Contractor -** Webcor/Obayashi Joint Venture.
- **Coordination Meeting (aka. Meeting of Mutual Understanding) -** A meeting conducted by TJPA Representative held after the pre-construction conference and before the start of construction for each Trade Work Package, attended by the TJPA Representative, the TJPA QA Manager, W/O (and the W/O trade subcontractor) where a mutual understanding of the system details are developed including forms for recording control activities, testing and the administrative system of onsite and offsite work. (reference: Specification 01-1400, paragraph 1.7 A)
- **Corrective Action Plan -** A written document submitted by the Trade Subcontractor detailing the Trade Contractor's approach to correct an item of work that fails to conform to the project requirements.
- **Corrective Action Request -** A written request from TJPA to develop a Corrective Action Plan for non-conforming work (TJPA form QA-09-01) that establishes a method for ensuring deficiencies in process or implementation adversely affecting quality are identified, cause determined, and an action plan to prevent recurrence is documented.
- **CQC Manager** – The Webcor/Obayashi JV Manager who is responsible for managing the Contractor's CQC System.
- **CQC Manager's Monthly CQC Report -** A section of the Contractors monthly written report prepared and submitted by the CQC Manager which reports Trade Subcontractors monthly CQC activities.
- **CQC Plan -** Webcor/Obayashi JV written quality management plan that meets the requirements of the TJPA Program QMS as appropriate for Webcor/Obayashi's JV scope of work and the means by which Webcor/Obayashi JV (the Contractor) and its Trade Subcontractors ensure project quality.
- **Daily CQC Report Log –** A log of the Trade Subcontractors daily CQC reports, maintained by the W/O CQC Manager.
- **Definable Feature of Work (DFOW) -** A unit of the work associated with the work of each specification section, bid package, trade subcontractor or trade contractor's individual discipline.
- **Federal Transit Administration (FTA) -** An administration within the U.S. Department of Transportation that provides stewardship to support a variety of locally planned, constructed, and operated public transportation systems throughout the United States.
- **Initial Phase Checklist –** A checklist prepared by the Trade Subcontractors CQC Manager for each Definable Feature of Work (DFOW) in the Initial work Phase per 01 14 00 1.9.C.
- **Master Definable Feature of Work List -** The project list definable features of work for all trade subcontractors maintained by the Webcor/Obayashi JV CQC Manager.

- **Non-conformance Report –** A written report submitted to the TJPA Representative to identify non-conforming: materials, in-process work activities and completed work.
- **Phase 1: Preparatory Phase** – Led by the Trade Subcontractors CQC Manager and attended by the Webcor/Obayashi JV CQC Manager, the Contractor's Production Team, Trade Subcontractors Representatives, Inspectors, and TJPA representatives, this is the first of the three phases of control where all requirements of the work: drawings, specifications, submittals, RFI's, installation and coordination issues are reviewed before beginning any Definable Feature of Work (DFOW). This meeting builds the work on "paper" prior to the start of work in the field, and is an effort to build consensuses among the all parties on how the work will conform to the project requirements. The information and agreements developed in this meeting are transferred to the Initial Work Phase meeting.
- **Phase 2: Initial** Led by the Trade Subcontractors CQC Manager and attended by the Webcor/Obayashi JV CQC Manager, the Contractor's Production Team, Trade Subcontractors Representatives, Inspectors, and TJPA representatives is held immediately prior to the start of the work. Using the meeting minutes from the Preparatory Phase meeting, this meeting transfers the information and requirements and agreements to the crews performing the work.
- **Phase 3: Follow-up Phase –** Led by the Trade Subcontractors CQC Manager along with the appropriate Trade Contractor's Superintendent(s)/Foremen, this third phase of control is an ongoing process held immediately after the work starts or a meaningful quantity of work is installed to confirm and document that the work is being installed as per the contract documents and per the Preparatory and Initial Phase agreements.
- **Preparatory Phase Checklist -** A checklist prepared by the Trade Subcontractors CQC Manager for each Definable Feature of Work (DFOW) in the Preparatory Phase per 01 14 00 1.9.B.(See Tab 120 "Forms" Preparatory Phase Checklist).
- **Quality** - Conformance to the requirements established by the contract documents.
- **Quality Inspection** - An Inspection of the work performed as the work progresses or prior to calling for an Agency, Code or Special Inspection to confirm the work meets the requirements of the Contract Documents.
- **Quality Management –-** Management of Quality control and quality assurance activities instituted to achieve the quality levels established by the contract documents.
- **Quality Management System Manual -** Issued by URS for the Transbay Transit Center and provides specific requirements for Program implementation based upon the Program Quality Policy and the FTA Quality Assurance and Quality Control Guidelines and is the guide for all members of the Program Management Team to deliver a project that meets the highest quality standards (reference: Transbay Transit Center QMSM, Introduction, page 1).
- **Submittal Log -** A written list indicating the status of all Submittals required by the Contract Documents, maintained by the Webcor/Obayashi Joint Venture production team.

- **Technical Specifications -** Divisions 01 through 33 of the project specifications.
- **Three Phases of Control** – The three meetings or actions that bring the Trade Subcontractors CQC Managers, Contractor's Production Team, Inspectors, TJPA representatives and/or field crews together to plan and implement project quality: The three phases of control include: The Preparatory Phase, Initial Phase and Follow-up Phase.
- **TJPA Construction Management Oversight Manager: -** Turner Construction.
- **TJPA: -** Transbay Transit Center Joint Powers Authority.
- **Trade Subcontractor CQC Manager** – The Trade Subcontractor employee accepted by Webcor/Obayashi JV who is responsible for managing the Trade Subcontractor's CQC System, and reports to the Webcor/Obayashi JV CQC Manager.
- **Trade Subcontractor's CQC Plan –** The Trade Subcontractors written quality management plan that meets the requirements of the TJPA Program QMS as appropriate for the Trade Subcontractors scope of work and is the means by which the Trade Subcontractors ensure project quality.
- **Trade Subcontractor's Definable Feature of Work List. -** The list of definable features of the work prepared by the Trade Subcontractors and submitted for approval to the Webcor/Obayashi JV CQC Manager
- **Trade Subcontractors Daily Quality Control Report -** The Trade Subcontractors Quality Manager's daily report that describes: the work completed, quality measures implemented, testing and inspections preformed, rework items identified, and deliveries received and as-built drawings updated. (See Tab 120 "Forms" Trade Subcontractors Daily Quality Control Report).

WEBCOR/OBAYASHI
CQC Org. Chart

3/16/12 rev. 2

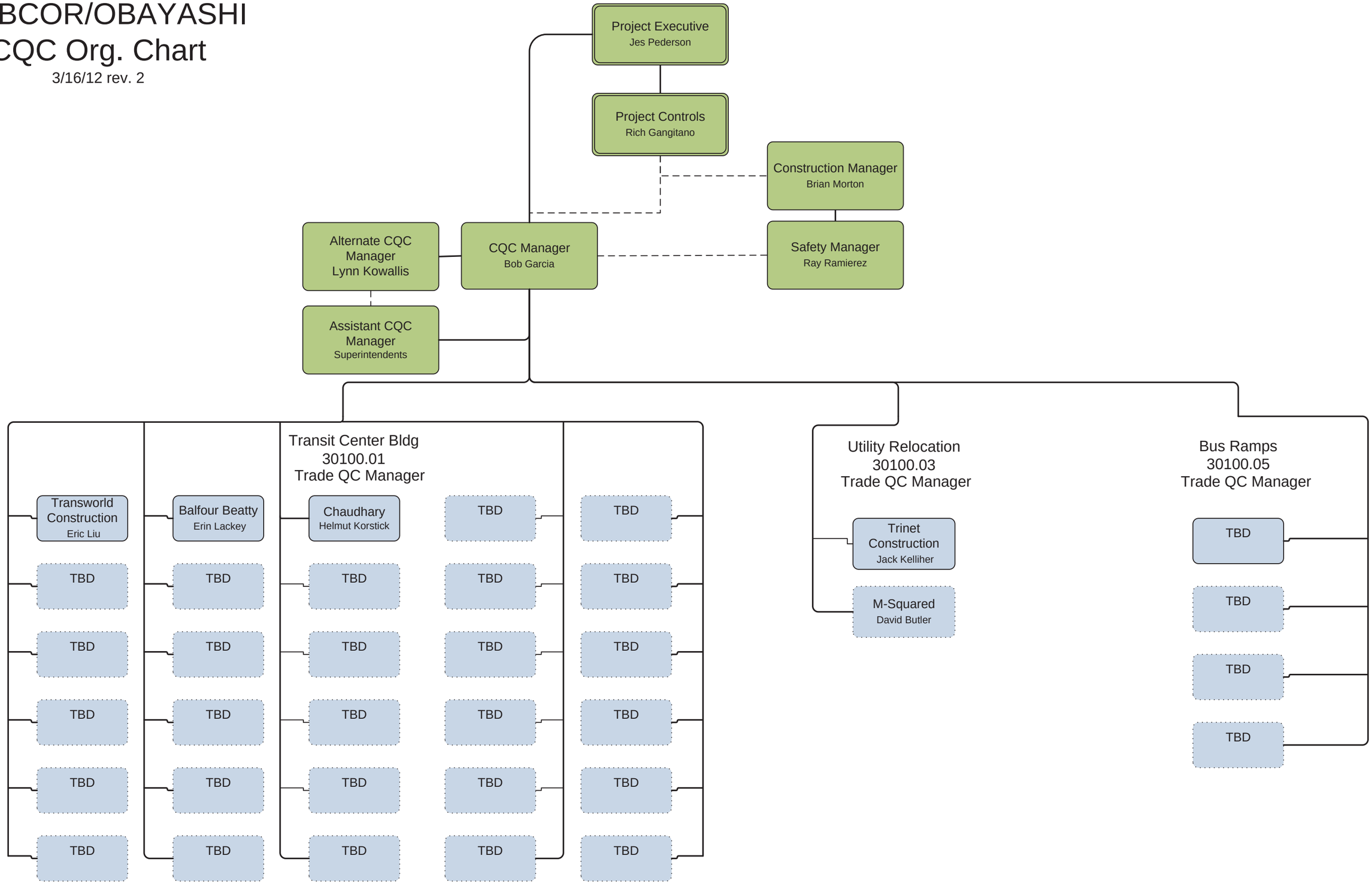

Exhibit J

2. Responsibilities and Qualifications

- Duties, responsibilities, and authorities of CQC team members
- Trade subcontractor duties
- CQC manager resume
- Alternate CQC manager Resume

2. QUALITY CONTROL RESPONSIBILITIES/ QUALIFICATIONS

RESPONSIBILITIES

Webcor/Obayashi JV will be responsible for implementing this Contractors Quality Control Plan and assuring that Trade Subcontractors prepare and implement trade package specific CQC Plans. Webcor /Obayashi JV will provide day to day oversight of the CQC System to assure Trade Subcontractor work conforms to the requirements of Transbay Transit Center Contract Documents and this Webcor/Obayashi JV CQC Plan.

Webcor/Obayashi JV will direct Trade Subcontractors to execute their CQC plans and maintain compliance with all project requirements as described in the Contract Documents. Contracts with Trade Subcontractors and Sub-tier Subcontractors shall include a requirement to comply with the provisions of this Plan, and to prepare and execute CQC plans appropriate for their scope of work. The Trade Subcontractors, Sub-tier Subcontractors and their Project Superintendents for this project are authorized to manage their own CQC Plans. All subcontractors, field personnel and their assigns that work at the site must conform to the requirements described in this CQC Plan and their trade package specific CQC Plans.

MANAGEMENT RESPONSIBILITY

Webcor/Obayashi JV fully integrates this quality management plan into the organizational structure and performance management systems of the project.

- Maintain and follow a documented Quality System consisting of a Site Specific Quality Manual with policies and procedures.
- Establish and implement project management procedures.
- Maintain Quality System documents and records.

PROJECT EXECUTIVE QUALITY RESPONSIBILITIES

The Project Executive of Webcor/Obayashi JV is the one person in the company ultimately responsible for quality. Regardless of other duties, quality responsibilities of the Project Executive include:

- Empower the Webcor/Obayashi JV Transbay Transit Center CQC Manager to perform the CQC duties described in the contract documents.
- Oversee the projects quality plan and objectives.

- Ensure the availability of necessary resources and information for effective operation of the CQC System.

WEBCOR/OBAYASHI JV CQC MANAGER DUTIES AND RESPONSIBILITIES

The CQC Manager, or his approved alternate, oversees the overall implementation of the Webcor /Obayashi JV Quality Control Plan. The CQC manager, when performing the duties of the CQC manager, will be independent of the "production organization". The CQC Manager will:

- During performance of the Work will have complete authority to take any action necessary to ensure conformance with the requirements of the Contract Documents. In the event of the CQC Managers absence, the Alternate CQC Manager must be present and will have the same authority as the CQC Manager. In the Alternate CQC Managers absence the Assistant CQC Manager must be present and will have the same authority as the CQC Manager.
- The Webcor/Obayashi CQC Manager, Alternate CQC Manager, Assistant CQC Manager will have a physical presence on site when work is in progress.
- Designate Alternate CQC Manager(s) and Assistant CQC Manager(s) to serve in the event of the CQC Managers absence.
- Review and approve the Trade Subcontractors CQC Plans prior to submittal to the TJPA for acceptance.
- Manage the development of the list of Definable Features of Work.
- Attend the Coordination Meeting for each Trade Work Package.
- Provide management with monthly CQC updates.
- Ensure Trade Subcontractor's application of Three Phases of Control for each Definable Feature of Work.
- Attend, or be represented by a Webcor/Obayashi JV representative, the Preparatory, Initial and Follow-up phase meetings.
- Stop work that does not comply with requirements of the Contract Documents, and direct removal and replacement of any defective work.
- Ensure that all Trade Subcontractor Work performed, on and off the construction site, conforms to requirements of the Contract Documents. Ensure that all materials and equipment comply with the requirements of the Contract Documents. Report any deficiencies and corrective action planned and taken.
- Ensure that all Trade Subcontractors CQC Plans are in conformance with the Webcor /Obayashi JV CQC plan and with the requirements of the Contract Documents.

- Ensure that all Trade Subcontractors certify their submittals for conformance with the requirements of the Contract Documents.
- Approve Webcor/Obayashi JV Daily Quality Control reports (see Form in Tab 12).
- Ensure that all Trade Subcontractors prepare Daily Quality Control reports.
- Maintain copies of all quality control documents.
- Support and facilitate QMS Audit process.

WEBCOR/OBAYASHI JV ALTERNATE CQC MANAGER DUTIES AND RESPONSIBILITIES

The Alternate CQC Manager reports to the CQC Manager and performs all duties of the CQC Manager when not on-site. The Alternate CQC manager, when performing the duties of the Alternate CQC Manager, is independent of the "production organization". The Alternate CQC Manager will:

- During performance of the Work will have complete authority to take any action necessary to ensure conformance with the requirements of the Contract Documents. In the event of the CQC Managers absence, the Alternate CQC Manager must be present and will have the same authority as the CQC Manager. In the Alternate CQC Managers absence the Assistant CQC Manager must be present and will have the same authority as the CQC Manager.
- The Webcor/Obayashi CQC Manager, Alternate CQC Manager, Assistant CQC Manager will have a physical presence on site when work is in progress.
- Review and approve the Trade Subcontractors CQC Plans prior to submittal to the TJPA for acceptance.
- Manage the development of the list of Definable Features of Work.
- Attend the Coordination Meeting for each Trade Work Package.
- Provide management with monthly CQC updates.
- Ensure Trade Subcontractor's application of Three Phases of Control for each Definable Feature of Work.
- Attend, or be represented by a Webcor/Obayashi JV representative, the Preparatory, Initial and Follow-up phase meetings.
- Stop work that does not comply with requirements of the Contract Documents, and direct removal and replacement of any defective work.
- Conduct quality inspections of Work performed to ensure compliance with requirements of the Contract Documents.

- Ensure that all Trade Subcontractor Work performed, on and off the construction site, conforms to requirements of the Contract Documents. Ensure that all materials and equipment comply with the requirements of the Contract Documents. Report any deficiencies and corrective action planned and taken.
- Ensure that all Trade Subcontractors CQC Plans are in conformance with the Webcor /Obayashi JV CQC plan and with the requirements of the Contract Documents.
- Ensure that all Trade Subcontractors certify their submittals for conformance with the requirements of the Contract Documents.
- Prepare or approve Daily Quality Control reports (see Form in Tab 12).
- Ensure that all Trade Subcontractors prepare Daily Quality Control reports.
- Maintain copies of all quality control documents.
- Support and facilitate QMS Audit process.

WEBCOR/OBAYASHI JV ASSISTANT CQC MANAGER DUTIES AND RESPONSIBILITIES

The Assistant CQC Manager reports to the CQC Manager and Alternate CQC Manager. The Assistant CQC Manager, when performing the duties of the Assistant CQC Manager, will be independent of the "production organization". The Assistant CQC Manager will:

- During performance of the Work will have complete authority to take any action necessary to ensure conformance with the requirements of the Contract Documents. In the event of the CQC Managers and the Alternate CQC Managers absence, the Assistant CQC Manager must be present and will have the same authority as the CQC Manager.
- The Webcor/Obayashi CQC Manager, Alternate CQC Manager, Assistant CQC Manager.
- Review and approve the Trade Subcontractors CQC Plans prior to submittal to the TJPA for acceptance.
- Attend the Coordination Meeting for each Trade Work Package.
- Ensure Trade Subcontractor's application of Three Phases of Control for each Definable Feature of Work.
- Stop work that does not comply with requirements of the Contract Documents, and direct removal and replacement of any defective work.
- Conduct quality inspections of Work performed to ensure compliance with requirements of the Contract Documents.

- Ensure that all Trade Subcontractor Work performed, on and off the construction site, conforms to requirements of the Contract Documents. Ensure that all materials and equipment comply with the requirements of the Contract Documents. Report any deficiencies and corrective action planned and taken.
- Prepare Daily Quality Control reports (see Form in Tab 12).
- Support and facilitate QMS Audit process.

TRADE SUBCONTRACTORS CQC MANAGER DUTIES/RESPONSIBILITIES:

The Trade Subcontractor CQC Manager reports to the Webcor /Obayashi JV CQC Manager and oversees the trade specific implementation of the quality control program and whose primary responsibility will be to implement the Trade Subcontractor's quality control plan. The Trade Subcontractor CQC manager will certify that the Trade Subcontractor's work is in compliance with the Contract Documents and complies with the Webcor/Obayashi Joint Venture Quality Control Plan and all quality control requirements contained in the Contract Documents, including specification section 01 14 00 Quality Control. The Trade Subcontractor CQC Manager will:

- Manage the Trade Subcontractors Quality Control Program on and off site.
- Submit a CQC Plan that meets the requirements of the Webcor/Obayashi CQC Plan, Specification 01 14 00 Quality Control and the TTC Quality Management System Manual
- The Trade Subcontractor CQC Manager or alternate will have a physical presence on site when work is in progress.
- Designate an Alternate Trade Subcontractor CQC Manager to serve in the event of the Trade Subcontractor CQC Managers absence.
- During performance of the Work will have complete authority to take any action necessary to ensure conformance with the requirements of the Contract Documents.
- Submit daily Quality Control Reports to the Webcor/Obayashi JV CQC Manager.
- Submit Preparatory and Initial Phase Checklists, along with Follow-up Phase documentation for each DFOW to the Webcor/Obayashi JV CQC Manager.
- Establish written procedures for Trade Subcontractor document control, submittal management and material procurement.
- Maintain and submit copies of all quality control documentation, certifications, and materials delivery receipts as required in the Contract Documents.
- Attend the Coordination meetings.

- Manage the Three Phases of Control process for each DFOW, including conducting the Preparatory, Initial and Follow-up phase meetings for each of the trade subcontractors DFOW.
- Immediately stop any work, for which they are responsible, that does not comply with requirements of the Contract Documents, and direct removal and replacement of any defective work.
- Conduct quality inspections of Work performed to ensure compliance with requirements of the Contract Documents.
- Ensure that all Work performed, on and off the construction site, and all materials and equipment conform to requirements of the Contract Documents. Report non-conformances and corrective action planned and taken.
- Remove any person from the Project that consistently fails to perform Work properly.
- Ensure that the Trade Subcontractors submittals conform to the requirements of the Contract Documents.
- Provide verification to the Webcor/Obayashi JV CQC Manager of Trade Subcontractors task completion prior to the work being inspected.
- Provide verification to the Webcor/Obayashi JV CQC Manager of Trade Subcontractors task completion prior to requesting final inspections.
- Facilitate inspections and tests.
- Cooperate with testing agency personnel.
- Provide access to the Work.
- Obtain and handle samples and equipment as defined in section 01 13 00 Submittals. Furnish storage and assistance as requested.
- Trade Subcontractor shall include within their quality assurance plan per Specification Section 01 16 00 1.3 Quality Assurance, procedures for full protection of Work and materials.
- Where required, deliver samples to testing agency.
- Take steps to ensure no portion of the work requiring testing or inspection is covered prior to the acceptance by authorized parties.
- Ensure that no testing or inspection is scheduled until all approvals for the work have been received. This includes welder's certifications, submittals, design/build engineering stamp and certification.
- Maintain as-built drawings per 01 17 20 Project As-Built Drawings.
- Support and facilitate QMS Audit process.

QUALIFIED SUBCONTRACTORS AND SUPPLIERS.

- As part of bid package development Webcor/Obayashi JV will prepare trade package specific subcontractor prequalification requirements. These prequalification's are submitted to, and reviewed by the TJPA. The pre-qualification requirements are then included in the project bidding manual.
- Prior to contract award Webcor/Obayashi JV verifies that all trade subcontractors and suppliers meet the project requirements as outlined in the project bidding manual and contract documents.

QUALIFICATIONS

BOB GARCIA

Quality Manager

EDUCATION AND BACKGROUND

As the Contractors Quality Control System Manager, Mr. Garcia has primary responsibility of managing the Contractors Quality Management System. His duties include drafting the project specific CQC plan and ensuring Trade Subcontractor compliance via implementation of specified process controls. He is the day to day interface between project production and quality management to assure the owner that the work conforms to the project requirements. He is responsible for documenting quality compliance and providing senior management with periodic quality reports.

Mr. Garcia graduated with a BA in Biology/Chemistry from San Jose State University in 1975. His 32 years of construction and quality management experience includes developing project specific and company-wide quality management programs for both private and public works construction projects. He has taken additional coursework on management leadership, financial and risk management, and exterior envelope systems.

RELEVANT QUALITY EXPERIENCE

Transbay Transit Center
San Francisco, CA

2010-Present: Manager of CM/GC Quality Control System. Developed and implemented CM/GC Quality Management Program based upon the Federal Transit Administration's 15 Elements of Contractors Quality Control Guidelines, including construction process controls based upon NAVFAC/USAEC Three Phases of Control.

The Transbay Transit Center Project in downtown San Francisco will transform transportation in California and stimulate the economy by building the "Grand Central of the West." As the largest approved public transportation project in the country, the project will replace the current Transbay Terminal at First and Mission streets in San Francisco with a modern regional transit hub connecting eight counties in the Bay Area and the State of California through nine transit systems: AC Transit, BART, Caltrain, Golden Gate Transit, Greyhound, MUNI, SamTrans, WestCAT and future High Speed Rail from San Francisco to Los Angeles. Additionally, it will extend Caltrain and California High Speed Rail underground from Caltrain's current terminus at 4th and King streets into the new downtown Transit Center and create a new neighborhood with homes, offices, parks and shops surrounding the new Transit Center.

Cleveland Clinic Abu Dhabi Hospital
United Arab Emirates

2010: Sixco/Samsung Joint Venture Document Control Manager- As part of the Quality Management effort, developed a sophisticated document management system which established the protocol for maintaining the conforming construction documents and document distribution system to assure that all project documents were current and only the most recent versions were immediately available to the construction team (Element 4: Document Control of the FTA Quality Control Guidelines). Documents controlled included over 18,000 drawing pages, 18 specification sections and 30,000+ shop drawings and drawing revisions for: structural steel, building curtain wall, mechanical, electrical, plumbing, fire life safety, medical gas systems and other hospital process systems.

Cleveland Clinic Abu Dhabi is a state-of-the-art hospital that brings the most advanced medical services of diagnostic and treatment capabilities in the region. The clinic specializes in innovative technologies in surgery, imaging, telemedicine, and electronic medical record systems that are integrated into five institutes: Gastroenterology, Eye, Heart and Vascular, Neurological, and Respiratory and Critical Care. Total of 2,600,000 sf and 360 beds. $1.7 billion.

Turner Construction Co. **Oakland, CA**	2006-2009: Quality Control Manager for Turner Construction Company's Northern California Business Unit. Served as the manager for the Business Units Construction Defect Task Force and developed Quality Control procedures for the business unit and specific projects. Developed curriculum and conducted business unit quality training programs. Manager responsible for developing the Quality section of the Turner's (Corporate) Superintendent training for their web based "Turner University" (Element 15: Training of the FTA Quality Control Guidelines). Worked as a member of the committee to establish a new corporate quality program.
Lucille Packard Children's Hospital **Palo Alto, CA**	2009: Developed a Quality Control program for managing the installation of the building exterior envelope (Element 7: Process Control of the FTA Quality Control Guidelines).
Santa Clara Valley Specialty Center **San Jose, CA**	2004-2006: Senior Project Manager overseeing the implementation of a NAVFAC/UAEC based Quality Control Program for the Santa Clara County Valley Specialty Center Medical Office Building (Element 7: Process Control of the FTA Quality Control Guidelines). The Santa Clara Valley Specialty Center offers 243,000 sf and 190 exam rooms and facilities serving as an outpatient specialty clinic for ophthalmology, orthopedics, endocrinology, otolaryngology, surgical specialties, oncology/nuclear medicine, pharmacy, laboratory and imaging services. This is an OSHPD project. $150 million.
Applied Materials **Sunnyvale, CA**	1995-1996: Developed and managed a construction clean room, quality construction protocol and final certification for a H6 Class 10 clean room. This project provided 435,000 sf of renovations including: seismic retrofit, new mechanical central plant, manufacturing clean rooms, tool fit-up, new offices, cafeteria and site upgrades for H-6 occupancy areas. $80 million.
Midpeninsula Regional Open Space District Offices **Los Altos, CA**	1994: Construction and Quality Manager providing quality inspection services for the renovation of the District's 9,000 sf. headquarters.

Windward Construction Company **Sunnyvale, CA**	1979-1995: Managed and supervised a privately held construction company. Duties included development and implementation of the Corporate Quality Management procedures.

RELEVANT PROJECT EXPERIENCE WHICH INCLUDED IMPLEMENTATION OF QUALITY CONTROL REQUIREMENTS

Cypress Semiconductor **San Jose, CA**	Cypress Semiconductor corporate headquarters consists of a three-story steel frame building with Glass Fiber Reinforced Concrete. The build out comprises of offices, executive suite and boardroom, cafeteria, and an 11,000 sf auditorium that accommodates 1,600 persons. The 5,000 sf cafeteria features a full kitchen that serves up to 1,500 meals per day in addition to providing catering services for the entire campus. Additional building amenities include a hair salon, massage therapy center, and a fitness center that encompasses an aerobic area, free weights area, and shower facilities. $62 million.
Guidant Corporation **Menlo Park, CA**	A medical device manufacturing facility that includes cGMP clean manufacturing, process and gas facilities, administrative offices, shipping, receiving and a cafeteria. 107,000 sf. $5 million.
Novellus Systems Inc. **San Jose, CA**	A semiconductor applications lab and engineering facility, including a robotic wafer delivery system, central plant, co-generation, process gas delivery and waste abatement systems. 82,000 sf. $65 million.
Mineta San Jose International Airport **San Jose, CA**	Temporary facilities and installation of 11 CTX9000 baggage screening machines at Terminals A and C for Boeing Corporation, involving SJIA airport operations, eleven national airlines and airport security to satisfy the federally mandated baggage screening program for the United States Government Transportation Security Agency (TSA). $25 million.
ALZA Corporation Clean Zone Improvement **Vacaville, CA**	cGMP - Upgrades to an operating drug manufacturing facility to comply with European pharmaceutical manufacturing standards. $15 million.

Lucille Packard Children's Hospital **Palo Alto, CA**	Lucille Packard Children's Hospital renovation included exterior façade renovation and an addition of 53 beds to surgery, oncology, and pediatric intensive care units. 80,000 sf. $90 million.
Stanford Graduate School of Business **Stanford, CA**	A 360,000 sf new business school campus comprised of eight buildings around three quadrangles. The campus includes a 600-seat lecture hall, dining facilities, faculty and staff offices, a parking structure for 900 vehicles, and dedicated space for career management and executive education programs. Also included are collaborative hands-on learning and virtual communication classrooms, linking students from Stanford to other schools around the world. $300 million.
Mills Peninsula Hospital **Burlingame,CA**	Mills Peninsula Hospital and Office Building Replacement was a 5-story above and one-story below grade general acute hospital project. Renovations included an addition of 241 beds, base isolation seismic safety, technology-ready facilities with medical/surgical patient care rooms equipped to accommodate higher acuity telemetry monitoring, emergency department, and a Helipad. $618 million.
Midpeninsula Regional Open Space District Offices **Los Altos, CA**	Program Management for regional Ranger Facilities. Defined the facilities requirements and assisted in architect selection for two new ranger field offices and maintenance facilities. $30,000.

CERTIFICATIONS AND PROFESSIONAL MEMBERSHIPS

US Navy/Army Corps of Engineers Quality/NAVFAC Certified

OSHA 30 Hour Safety Program

ASHE Health Care Certified

LEAN/Last Planner Instructor

QUALIFICATIONS

LYNN KOWALLIS

Quality Alternate

EDUCATION AND BACKGROUND

As the Alternate Contractors Quality Control System Manager, Mr. Kowallis has primary responsibility to assisting the Quality Control System Manager and help implement the Contractors Quality Management System.

His duties include reporting to the CQC Manager and preform all duties of the CQC Manager when not on-site. Ensuring Trade Subcontractor compliance via implementation of specified process controls. He is to assist the day to day interface between project production and quality management to assure the owner that the work conforms to the project requirements. He is responsible the tracking of Quality Control documents for quality compliance and providing the Contractors Quality Control Manager with periodic quality reports.

Mr. Kowallis graduated with a Bachelor of Science in Construction Management from Utah Valley University in 2006. His 7 years of construction management experience includes supervising quality control testing, maintaining and reporting quality control reports and implementing the quality control process projects wide.

RELEVANT QUALITY EXPERIENCE

Transbay Transit Center
San Francisco, CA

2012-Present: Alternate Manager of CM/GC Quality Control System. Assisted in the developed and implementation of the CM/GC Quality Management Program based upon the Federal Transit Administration's 15 Elements of Contractors Quality Control Guidelines, including construction process controls based upon NAVFAC/USAEC Three Phases of Control.

The Transbay Transit Center Project in downtown San Francisco will transform transportation in California and stimulate the economy by building the "Grand Central of the West." As the largest approved public transportation project in the country, the project will replace the current Transbay Terminal at First and Mission streets in San Francisco with a modern regional transit hub connecting eight counties in the Bay Area and the State of California through nine transit systems: AC Transit, BART, Caltrain, Golden Gate Transit, Greyhound, MUNI, SamTrans, WestCAT and future High Speed Rail from San Francisco to Los Angeles. Additionally, it will extend Caltrain and California High Speed Rail underground from Caltrain's current terminus at 4th and King streets into the new downtown Transit Center and create a new neighborhood with homes, offices, parks and shops surrounding the new Transit Center.

Vantage Data Center Project
Santa Clara, CA

2011: Office Engineer for Hensel Phelps Construction Company. As part of the Quality Control effort, developed the specific Quality Control Plan for the project and help manage the quality control process though out the project. Prepared daily quality control reports and supervised quality control testing for the commissioning process. Reviewed mechanical, electrical, plumbing, fire life safety and building management systems drawings for quality and accuracy.

Vantage Data Center is a LEED Platinum Certified Design-Build project with technological advancement in data centers. The Santa Clara campus has a 37 MW of effective IT power capacity. The data center uses a standard 3.0 MW module to meet data center requirements. Total of 93,000 sf.

Minta San Jose International Airport San Jose, CA

2008-2011: Field Engineer/Office Engineer for Hensel Phelps Construction Company. Implemented the Quality control process for trade subcontractors and verified quality work was established on the project. Scheduled and conducted quality preparatory, initial and follow up meetings with trade subcontractors. Assisted the Quality Control Manager in reviewing drawings and specifications for quality assurance. Maintained project documents for the mechanical, electrical, plumbing, security, fire life safety and building management system drawings and distributed the updated revise set to the project team for quality assurance.

The project elements include a new Terminal B and concourse with an upgraded baggage handling system and a total of 12 aircraft gates, Terminal A upgrades, a seven deck parking garage with a consolidated rental car center that has 3,000 spaces for all rental car operations and 350 public parking spaces. $600 million.

Kaweah Delta District Hospital. Visalia, CA

2006-2008: Field Engineer for Hensel Phelps Construction Company. Coordinated and processed all the quality field inspections between trade subcontractors, OSHPD, and city inspectors. Reviewed quality control testing results for discrepancies and non-conformances. Prepared daily quality control field reports. Maintained the quality control process that was established in the Quality Control Plan.

Kaweah Delta Hospital is a state-of-the-art hospital that has one of the top cardio vascular facilities in the nation. The facility specializes in Cardiac, Vascular , Orthopedics, Neurosurgery, OB/GYN, ENT, Ophthalmology and Plastic reconstructive work. Total 200,000 sf , 12 surgical rooms, 581 beds. $106 million.

Residental Remodeling Orem, UT

2003-2004: Assistant Project Manager for Clawson Remodeling Inc. Assisted in the development of construction plans to meet code requirements and quality assurance.

Electrical Apprentice West Jordan, UT

2002: Electrical Apprentice for Kowallis Electric Incl. Installed quality electrical wiring commercial building and custom homes. Evaluated and studied electrical plans, specifications and code requirements for commercial building and residential homes.

RELEVANT PROJECT EXPERIENCE WHICH INCLUDED IMPLEMENTATION OF QUALITY CONTROL REQUIREMENTS

Vantage Data Center **Santa Clara, CA**	Developed the specific Quality Control Plan for the project. Managed the quality control process though out the project. Prepared daily quality control reports. Supervised quality control inspections and testing for the commissioning process. Reviewed mechanical, electrical, plumbing, fire life safety and building management systems drawings for quality and accuracy.
Minta San Jose International Airport **San Jose, CA**	Implemented the Quality Control process for trade subcontractors. Assisted the Quality Control Manager in reviewing drawings and specifications for quality assurance. Distributed updated and revised drawings and specifications to the project team to implement quality assurance in the field.
Kaweah Delta District Hospital **Visalia, CA**	Coordinated the quality control process with all the quality control field inspections between trade subcontractors, OSHPD, and city inspectors. Reviewed quality control testing results for discrepancies and non-conformances. Prepared daily quality control field reports for client and project team. Maintained the quality control process that was established the Quality Control Plan.

CERTIFICATIONS AND PROFESSIONAL MEMBERSHIPS

US Navy/Army Corps of Engineers Quality/NAVFAC Certified

3. WEBCOR/ OBAYASHI JV CQC MANAGER APPOINTMENT LETTER

WEBCOR BUILDERS OBAYASHI JOINT VENTURE

3 . QUALITY CONTROL MANAGER APPOINTMENT LETTER

To: Bob Garcia
Quality Control Manager

From: Jes Pederson
Executive Vice President Webcor/Obayashi Joint Venture

Date: January 4, 2011

Subject: Appointment of Quality Control Manager for Transbay Project

---

Please be advised that you are hereby appointed as Quality Control Manager for the Transbay Transit Center Project. Your responsibilities include managing and implementing the Webcor/Obayashi Joint Venture Project Quality Control Plan.

You are assigned the following responsibilities:

- Implementing provisions of the Webcor/Obayashi JV Quality Control Plan as it pertains to the contract Documents.
- Assuring that the Quality Control Plan is established and implemented by persons doing work that impacts quality.
- Assuring that the Quality Control Plan is maintained.
- Acting as Webcor/Obayashi JV liaison with parties outside of the company on matters relating to quality.
- Reporting to Senior Management on the performance of the Quality Control Plan, including needed improvements.
- Review of the quality control documents.
- Review of quality control records.
- Review of quality related contract submittals.
- Review of project inspection and quality control activities.
- Review of subcontractors quality control programs.
- Reporting to the TJPA representative on matters pertaining to quality.
- Reviewing and distributing subcontract quality control reports.

I grant you authority for carrying out the above responsibilities including:

- Stopping Work when continuing work my adversely affect quality or cover up a defect.
- To direct the removal an replacement of an nonconforming work or material by any subcontractor or supplier.

Executive Vice President signature and date: 1/3/11

WEBCOR BUILDERS OBAYASHI JOINT VENTURE

ALTERNATE QUALITY CONTROL MANAGER APPOINTMENT LETTER

To: Lynn Kowallis
Alternate Quality Control Manager

From: Bob Garcia
Quality Control Manager

Date: March 24, 2012

Subject: Appointment of Alternate Quality Control Manager for Transbay Project

---

Please be advised that you are hereby appointed as Alternate Quality Control Manager for the Transbay Transit Center Project. Your responsibilities include managing and implementing the Webcor/Obayashi Joint Venture Project Quality Control Plan.

You are assigned the following responsibilities:

- Implementing provisions of the Webcor/Obayashi JV Quality Control Plan as it pertains to the contract Documents.
- Assuring that the Quality Control Plan is established and implemented by persons doing work that impacts quality.
- Assuring that the Quality Control Plan is maintained.
- Acting as Webcor/Obayashi JV liaison with parties outside of the company on matters relating to quality.
- Reporting to Senior Management on the performance of the Quality Control Plan, including needed improvements.
- Review of the quality control documents.
- Review of quality control records.
- Review of quality related contract submittals.
- Review of project inspection and quality control activities.
- Review of subcontractors quality control programs.
- Reporting to the TJPA representative on matters pertaining to quality.
- Reviewing and distributing subcontract quality control reports.

I grant you authority for carrying out the above responsibilities including:

- Stopping Work when continuing work my adversely affect quality or cover up a defect.
- To direct the removal and replacement of nonconforming work or material by any subcontractor or supplier.

Bob Garcia
Quality Control Manager, Webcor/Obayashi JV

Signature and date: 3/22/2012

4. SUBMITTAL MANAGEMENT AND DOCUMENT CONTROL

4. SUBMITTAL MANAGEMENT AND DOCUMENT CONTROL

SUBMITTAL MANAGEMENT

The Submittal process is designed to assure that all material, assemblies, equipment and shop drawings meet the Transbay Transit Center project requirements and are approved by the TJPA prior to procurement and installation. The Submittal process is the means by which the Trade Subcontractors control product purchasing. This submittal schedule will be developed incrementally and additional submittals will be added as trade packages are awarded and subcontractors are brought on board. Trade subcontractors will submit their submittal schedules for approval, as required in the Division 00, 01 and technical specifications, prior to the start of work.

DOCUMENT CONTROL

Webcor/Obayashi's Document Control process is the means by which information specific in the Contract Documents to be in Webcor/Obayashi's and the Trade Subcontractors control are logged, filed, and updated to assure that all relevant information meets the project requirements.

SUBMITTAL MANAGEMENT AND DOCUMENT CONTROL PROCEDURES

The Webcor/Obayashi JV Document Control and Submittal management procedures are part of Webcor/Obayashi's Transbay Transit Center Policy and Procedures Guide. The relevant sections of that guide addressing submittal management and document control are listed below and are included in this section of the Webcor/Obayashi JV CQC Manual.

1. Submittals
2. Document control
3. File naming conventions
4. Filing archive
5. Transmittals
6. Document distribution matrix
7. Design documents
8. Master project document log
9. Updating drawings and specifications
10. Document set manager
11. CQC file structure

Submittals

November 18, 2011

Purpose

To obtain approval from the Architect/Engineer/Consultant for all materials, assemblies, equipment and shop drawing submittals required by the contract documents.

Policy

To install materials, assemblies and equipment only after approval is obtained from the appropriate reviewing Architect/Engineer/Consultant responsible for the particular scope of work.

Procedure

- Webcor/Obayashi and TJPA process submittals using two different types of project management software. Webcor/Obayashi uses CMiC and TJPA uses ConstructWare.
- In CMiC submittal packages contain submittals and all of the history of the submittal is tracked at the submittal level. The submittal package is simply the nest of the submittals that are attached to it.
- Submittals are transmitted to TJPA from Webcor/Obayashi via CMiC and ConstructWare.
    - The naming format of the PDF submittal is crucial for the transmission to be successful.
- Submittal Actions Status:

ACTION	STATUS
Received	Open
Sent	Submitted
Returned	No Exceptions Taken, Make Corrections Noted, Revise and Resubmit, or Rejected
Forwarded	Same as Returned Status

Receive Submittal from Subcontractor – 0-5 days

Was it received on time? If not, have the department head notify the subcontractor that it was late. Is the submittal complete? If not, return the submittal to the subcontractor, transmittal shall include notification that the submittal is incomplete, give a date that the re-submittal is required, and notify them of their potential risk in missing the submittal date.

Once reviewed using the submittal process checklist and deemed complete, stamp, (All pages of shop drawings; front page only for product data), distribute to PM, QC and Supt. to review for compliance, and transmit to ownership.

Design Team Review – 12 days

Design team will review the submittal. Each layer of review (Architect and Consultants) will stamp **ALL** pages and return to Webcor/Obayashi's document control manger.

Returned Submittal – 5days

Reviewed by Document Manager – Notify Author

Document Control will receive e-mail notification that the submittal has been reviewed in ConstructWare. Document Control will forward the e-mail notification along will all attachments to Author.

PM Triage – Notification Sent to Subcontractors

Revise & Re-Submit or Rejected

Return R&R or Rejected submittal to author subcontractor. PM will include in the transmittal a due date for re-submittal (5 days). Director will make a case-by-case determination on whether to send a preliminary submittal to other subcontractors for coordination.

No Exceptions Taken & Make Corrections Noted

Email author subcontractor and all affected trade subcontractors the approved submittal. PM will include transmittal with the action required.

Is there a Cost / Schedule Impact or Scope Change?

Subcontractors have 5 days from the returned date to respond with a cost or schedule impact.

Written Notification to Owner, draft RFI to Capture Cost

Shop drawings, product data, and samples "are not contract documents" per our contract language. Therefore, any change in scope due to a submittal must be captured via RFI. Director should also send written notification to ownership of any scope change incurred from a returned Submittal.

Storing Approved Submittals

Author of submittal will file all documents and correspondence within the storage folder and post the documents electronically.

- Put approved electronic copy of submittal in the designated folder.

SUBMITTAL PROCESS CHECKLIST

Submittal Package No.:_____ Date Received:_____

Submittal Name:_____

- ☐ Review each submittal to:
  - ☐ Verify that the submittal's contents match the accompanying transmittal. Did we receive everything listed on the transmittal?
  - ☐ Verify that the submittal's contents are complete per the submittal register. Important: submittal packages need to be complete and should include <u>all</u> information necessary for review. Partial submittals are to be rejected by W/O (if we don't the TJPA will).
  - ☐ Verify that the contents of the submittal are in conformance with the technical specifications and other appropriate contract documents.
  - ○ Is the Submittal a Substitution?
    - ◉ No- Continue Processing Submittal
    - ○ Yes -Reject submittals that are substitution requests- There is a separate process for substitutions.
  - ☐ Verify that the trade subcontractor has checked and coordinated all dimensions, materials, field measurements, with the requirements of the Work and the Contract Documents.
  - ☐ Verify that the submittal complies with the requirements of reference specifications –SFDPW, PG&E etc.
  - ☐ Confirm that all professional certifications (stamp) w/license number and expiration date are provided and signed if required.
  - ☐ Note any variations from the Contract requirements (if there are create an issue in CMiC)
  - No questions Address all questions raised or noted in the submittals; requests to verify dimensions, etc. If there are questions with the submittal:
    - o Can the questions be answered by W/O?
    - o Does an RFI need to be submitted?
    - o Does an issue need to be created in CMiC?
    - o Identify who is responsible for answering the question
  - ☐ Identify all affected and adjacent trades that can be potentially impacted by submittal. Develop an action plan to coordinate submittal information with ALL affected and adjacent trades.
  - ○ If the submittal is complete, stamp the first page of each item. If it is shop drawings, all sheets must be stamped.

Trade Scope Superintendent:_____ Date:_____

Trade Scope PM:_____ Date_____

CQC Manager:_____ Date:_____

Safety Manager:_____ Date:_____

Submittal Log

Project 30100 - Transbay Transit Center Project

Project Office
175 Beale St
San Francisco, CA 94105
Phone (415) 978-5700 Fax (415) 904-8119

Submittal #	Cycle	Submittal Name	Submittal Package	From Company	To Company	Date Sent	Date Due	Date Returned	Date Sent to Sub	Days Late	Status
No Spec Section											
0402.001.00	1	Traffic Control Plan	0402.001.0	MSQUA902	SANDI612	8/26/11	9/14/11			0	Open
T00000-100000A08	1	Labor Rates	TG1901-028	TRANS500	TURNE361	5/05/11	5/23/11	5/26/11	6/01/11	3	Approved As Noted
TA0000-011300A01	1	Submittal Schedule	TG1901-006	TRANS500	TURNE361	12/07/10	12/23/10	12/20/10	12/20/10	-3	No Exceptions Taken
TA0000-011300A01	2	Submittal Schedule	TG1901-006	TRANS500	TURNE361	6/24/11	7/13/11	8/03/11	8/03/11	21	No Exceptions Taken
TA0000-C0001A01	1	301 Mission Wall Demolition Plan	TG1901-016	TRANS500	TURNE361	1/05/11	1/21/11	1/06/11	1/06/11	-15	Revise and Resubmit
TA0000-S0002A01	1	Hilti Hit-RE 500-SD	TG1901-022	TRANS500	TURNE361	2/25/11	3/15/11	3/02/11	3/02/11	-13	No Exceptions Taken
TA0000-S0002A02	1	Hilti Certification Cards	TG1901-022	TRANS500	TURNE361	3/08/11	3/24/11	3/21/11	3/23/11	-3	No Exceptions Taken
TA1010-S5000A01	1	Concrete Mix Design	TG1901-001	TRANS500	TURNE361	12/07/10	12/23/10	12/20/10	12/20/10	-3	Make Corrections Noted
TA1010-S5000A01	2	Concrete Mix Design	TG1901-001	TRANS500	TURNE361	1/25/11	2/10/11	2/03/11	2/04/11	-7	Make Corrections Noted
TA1010-S5000A02	1	Rebar Letter of Compliance	TG1901-001	TRANS500	TURNE361	12/07/10	12/23/10	12/20/10	12/20/10	-3	No Exceptions Taken
TA1010-S5000A03	1	Reinforcing Steel Shop Drawing	TG1901-001	TRANS500	TURNE361	1/25/11		2/03/11	2/04/11	0	No Exceptions Taken
TA1010-S5000A04	1	Welding Procedure Specification	TG1901-001	TRANS500	TURNE361	3/29/11	4/14/11	4/05/11	4/05/11	-9	No Exceptions Taken
TA1010-S5000A04	2	Welding Procedure Specification	TG1901-001	TRANS500	TURNE361	4/26/11	5/12/11	4/22/11	4/27/11	-20	No Exceptions Taken
TA1010-S5000A05	1	Concrete Mix Design (curbs)	TG1901-029	TRANS500	TURNE361	6/24/11	7/13/11	7/12/11	7/13/11	-1	For Record Only
TA1030-C0002A01	1	Waterproofing - Product Data	TG1901-019	TRANS500	TURNE361	5/18/11	6/06/11	6/10/11	6/13/11	4	Submitted
TA1030-C0002A02	1	Waterproofing - Samples	TG1901-019	TRANS500	TURNE361					0	Closed
TA1030-C0002A03	1	Waterproofing - Installer Certs	TG1901-019	TRANS500	TURNE361	5/18/11	6/06/11	6/10/11	6/13/11	4	Submitted
TA1030-C0002A04	1	Waterproofing - Shop Drawings	TG1901-019	TRANS500	TURNE361	5/18/11	6/06/11	6/10/11	6/13/11	4	Submitted
TA1030-C0002A05	1	Waterproofing - Flashing Shop Drawings	TG1901-019	TRANS500	TURNE361	5/18/11	6/06/11	6/10/11	6/13/11	4	Submitted
TA1030-C0002A07	1	Waterproofing - Sample of Warranty	TG1901-019	TRANS500	TURNE361	5/17/11	6/03/11	6/10/11	6/13/11	7	Approved As Noted
TA2010-315613A09	1	Corrective Action Plan for Sunken CDSM Solider Piles	TG0300-583	BALFO900	TURNE361	1/13/12	1/31/12	1/20/12	1/20/12	-11	Make Corrections Noted
TA2010-315613A09	2	Corrective Action Plan for Sunken CDSM Solider Piles	TG0300-583	BALFO900	TURNE361	2/01/12	2/17/12		2/15/12	0	Make Corrections Noted
TA2010-31561A10	1	CDSM Sand Pocket Corrective Action Plan	TG0300-583	BALFO900	TURNE361	1/13/12	1/31/12	1/20/12	1/20/12	-11	Make Corrections Noted
TA2010-31561A10	2	CDSM Sand Pocket Corrective Action Plan	TG0300-583	BALFO900	TURNE361	2/01/12	2/17/12		2/15/12	0	Make Corrections Noted
TA2010-31561A11	1	BSE - Corrective Action Plan CDSM Wall Beam #859	TG0300-584	BALFO900	TURNE361					0	Submitted
TA2010-31561A12	1	CDSM Wall Corrective Action Plans - Resplicing of Solider Piles								0	Open
TB2010-A6000A01	1	Sheet Metal Panel: Shop Drawings	TG1901-024	TRANS500	TURNE361	4/06/11	4/22/11	4/21/11	4/22/11	-1	No Exceptions Taken
TB2010-A6000A02	1	Stucco Product Data	TG1901-014	TRANS500	TURNE361	12/21/10	1/11/11	1/17/11	1/18/11	6	No Exceptions Taken

Project Office
175 Beale St
San Francisco, CA 94105
Phone (415) 978-5700 Fax (415) 904-8119

Submittal #	Cycle	Submittal Name	Submittal Package	From Company	To Company	Date Sent	Date Due	Date Returned	Date Sent to Sub	Days Late	Status
No Spec Section (continued)											
TB2010-A6000A02	2	Stucco Product Data	TG1901-014	TRANS500	TURNE361	3/07/11	3/23/11	2/28/11	3/01/11	-23	No Exceptions Taken
TB2010-A6000A02	3	Stucco Product Data	TG1901-014	TRANS500	TURNE361	4/07/11	4/25/11	4/21/11	4/22/11	-4	No Exceptions Taken
TB2010-A6000A02	4	Stucco Product Data	TG1901-014	TRANS500	TURNE361	5/05/11	5/23/11	5/16/11	5/17/11	-7	No Exceptions Taken
TB2010-A6000A03	1	Stucco Color Sample	TG1901-014	TRANS500	TURNE361	12/21/10	1/11/11	1/17/11	1/18/11	6	No Exceptions Taken
TB2010-A6000A03	2	Stucco Color Sample	TG1901-014	TRANS500	TURNE361	3/07/11	3/23/11	2/28/11	3/01/11	-23	No Exceptions Taken
TB2010-A6000A03	3	Stucco Color Sample	TG1901-014	TRANS500	TURNE361	4/07/11	4/25/11	4/21/11	4/22/11	-4	No Exceptions Taken
TB2010-A6000A03	4	Stucco Color Sample	TG1901-014	TRANS500	TURNE361	5/05/11	5/23/11	5/16/11	5/17/11	-7	No Exceptions Taken
TB2010-A6000A04	1	Sheet Metal Panel: Product Data	TG1901-024	TRANS500	TURNE361	4/06/11	4/22/11	4/21/11	4/22/11	-1	No Exceptions Taken
TB2010-A6000A05	1	Sheet Metal Panel: Sample	TG1901-024	TRANS500	TURNE361	4/06/11	4/22/11	4/21/11	4/22/11	-1	No Exceptions Taken
TB2010-S0001A01	1	301 Mission Screen Wall - Wood Product Data (includes wood, weeps screed, "F" reveal molding, backer rod)	TG1901-010	TRANS500	TURNE361	12/17/10	1/07/11	1/06/11	1/06/11	-1	No Exceptions Taken
TB2010-S0001A01	2	301 Mission Screen Wall - Wood Product Data (includes wood, weeps screed, "F" reveal molding, backer rod)	TG1901-010	TRANS500	TURNE361	1/25/11	2/10/11	2/11/11	2/15/11	1	No Exceptions Taken
TB2010-S0001A01	3	301 Mission Screen Wall - Wood Product Data (includes wood, weeps screed, "F" reveal molding, backer rod)	TG1901-010	TRANS500	TURNE361	3/29/11	4/14/11	2/28/11	3/01/11	-45	No Exceptions Taken
TB2010-S0001A01	4	301 Mission Screen Wall - Wood Product Data (includes wood, weeps screed, "F" reveal molding, backer rod)	TG1901-010	TRANS500	TURNE361	3/29/11	4/14/11	4/13/11	4/13/11	-1	No Exceptions Taken
TB2010-S0001A02	1	Light Gauge Framing - Product Data	TG1901-011	TRANS500	TURNE361	12/17/10	1/07/11	1/06/11	1/06/11	-1	Make Corrections Noted
TB2010-S0001A02	2	Light Gauge Framing - Product Data	TG1901-011	TRANS500	TURNE361	1/25/11	2/10/11	2/11/11	2/15/11	1	Make Corrections Noted
TB2010-S0001A02	3	Light Gauge Framing - Product Data	TG1901-011	TRANS500	TURNE361	2/18/11	3/09/11	3/28/11	3/01/11	19	Make Corrections Noted
TB2010-S0001A03	1	Light Gauge Framing - Shop Drawings	TG1901-011	TRANS500	TURNE361	1/25/11	2/10/11	2/11/11	2/15/11	1	Make Corrections Noted
TB2010-S0001A03	2	Light Gauge Framing - Shop Drawings	TG1901-011	TRANS500	TURNE361	2/18/11	3/09/11	3/28/11	3/01/11	19	Make Corrections Noted
TB2010-S0001A05	1	301 Mission Screen Wall - Wood: Shop Drawings	TG1901-010	TRANS500	TURNE361	1/25/11	2/10/11	2/11/11	2/15/11	1	No Exceptions Taken
TB2010-S0001A05	2	301 Mission Screen Wall - Wood: Shop Drawings	TG1901-010	TRANS500	TURNE361	2/18/11	3/09/11	2/28/11	3/01/11	-9	No Exceptions Taken
TB2010-S0001A06	1	Structural Steel Welding Certificates	TG1901-002	TRANS500	TURNE361	1/25/11	2/10/11	2/04/11	2/04/11	-6	No Exceptions Taken
TB2010-S0001A07	1	Structural Steel Welding Procedure Specifications (WPS)	TG1901-025	TRANS500	TURNE361	4/12/11	4/28/11	4/22/11	4/27/11	-6	Make Corrections Noted
TB2010-S0001A08	1	Structural Steel Mill Certificates	TG1901-026	TRANS500	TURNE361	4/13/11	4/29/11	5/05/11	5/06/11	6	No Exceptions Taken
TB2010-S0001A09	1	Steel Plate Mill Certificates	TG1901-026	TRANS500	TURNE361	4/13/11	4/29/11	5/05/11	5/06/11	6	No Exceptions Taken
TB2010-S0001A10	1	Anchor Bolt Mill Certificates	TG1901-026	TRANS500	TURNE361	4/13/11	4/29/11	5/05/11	5/06/11	6	No Exceptions Taken

Project Office
175 Beale St
San Francisco, CA 94105
Phone (415) 978-5700 Fax (415) 904-8119

Submittal #	Cycle	Submittal Name	Submittal Package	From Company	To Company	Date Sent	Date Due	Date Returned	Date Sent to Sub	Days Late	Status
No Spec Section (continued)											
TB2010-S0002A01	1	301 Mission Screen Wall - Insulation Separation Tape	TG1901-010	TRANS500	TURNE361	3/29/11	4/14/11	4/13/11	4/13/11	-1	No Exceptions Taken
TB2010-S0002A02	1	301 Mission Screen Wall - Stainless Steel Fasteners	TG1901-010	TRANS500	TURNE361	3/29/11	4/14/11	4/13/11	4/13/11	-1	No Exceptions Taken
TB2010-S0002A03	1	301 Mission Screen Wall - SASM (Self Adhering Sheet Membrane)	TG1901-027	TRANS500	TURNE361	4/29/11	5/17/11	5/05/11	5/06/11	-12	Make Corrections Noted
TB2010-S5000A01	1	Structural Steel Shop Drawings	TG1901-002	TRANS500	TURNE361	12/07/10	12/23/10	12/20/10	12/20/10	-3	Make Corrections Noted
TB2010-S5000A01	2	Structural Steel Shop Drawings	TG1901-002	TRANS500	TURNE361	1/25/11	2/10/11	2/04/11	2/04/11	-6	Make Corrections Noted
TB2010-S5000A02	1	301 Mission Screen Wall - Stainless Steel Anchor Bolts	TG1901-010	TRANS500	TURNE361	3/29/11	4/14/11	4/13/11	4/13/11	-1	No Exceptions Taken
TB2010-S5000A03	1	Grout Mix Design and Material: Product Data	TG1901-023	TRANS500	TURNE361	3/25/11	4/12/11	3/30/11	3/31/11	-13	No Exceptions Taken
TB2010-S5000A03	2	Grout Mix Design and Material: Product Data	TG1901-023	TRANS500	TURNE361	3/29/11	4/14/11	3/30/11	3/31/11	-15	No Exceptions Taken
TB2010-S5000A04	1	Narrative of Grouting Procedure	TG1901-023	TRANS500	TURNE361	3/25/11	4/12/11	3/30/11	3/31/11	-13	Make Corrections Noted
TB2010-S5000A04	2	Narrative of Grouting Procedure	TG1901-023	TRANS500	TURNE361	3/29/11	4/14/11	3/30/11	3/31/11	-15	Make Corrections Noted
TB2010-S5000A05	1	Qualifications and Resume	TG1901-023	TRANS500	TURNE361	3/25/11	4/12/11	3/30/11	3/31/11	-13	No Exceptions Taken
TB2010-S5000A05	2	Qualifications and Resume	TG1901-023	TRANS500	TURNE361	3/29/11	4/14/11	3/30/11	3/31/11	-15	No Exceptions Taken
TB2010-S5000A06	1	301 Mission Screen Wall - Stainless Steel Anchor Bolts - Shop Drawing	TG1901-010	TRANS500	TRANS500	4/13/11	4/29/11	4/13/11	4/13/11	-16	No Exceptions Taken
TC3010-A5000A01	1	Paint Product Data	TG1901-012	TRANS500	TURNE361	12/21/10	1/11/11	1/14/11	1/18/11	3	No Exceptions Taken
TC3010-A5000A01	2	Paint Product Data	TG1901-012	TRANS500	TURNE361	3/07/11	3/23/11	3/21/11	3/23/11	-2	No Exceptions Taken
TC3010-A5000A02	1	Paint Color Sample	TG1901-012	TRANS500	TURNE361	12/21/10	1/11/11	1/14/11	1/18/11	3	No Exceptions Taken
TC3010-A5000A02	2	Paint Color Sample	TG1901-012	TRANS500	TURNE361	3/07/11	3/23/11	3/21/11	3/23/11	-2	No Exceptions Taken
TC3010-A5000A05	1	Aluminum Panel Shop Drawings	TG1901-013	TRANS500	TURNE361	1/25/11	2/10/11	2/22/11	2/22/11	12	Make Corrections Noted
TC3010-A5000A05	2	Aluminum Panel Shop Drawings	TG1901-013	TRANS500	TURNE361	4/07/11	4/25/11	4/21/11	4/22/11	-4	Make Corrections Noted
TC3010-A6000A01	1	Stone Color Sample for the Wall	TG1901-004	TRANS500	TURNE361	12/07/10	12/23/10	12/20/10	12/20/10	-3	No Exceptions Taken
TC3010-A6000A02	1	Stone Adhesive	TG1901-004	TRANS500	TURNE361	12/07/10	12/23/10	12/20/10	12/20/10	-3	No Exceptions Taken
TC3010-A6000A02	2	Stone Adhesive	TG1901-004	TRANS500	TURNE361	2/16/11	3/07/11	2/28/11	3/01/11	-7	No Exceptions Taken
TC3010-A6000A02	3	Stone Adhesive	TG1901-004	TRANS500	TURNE361	3/16/11	4/01/11	3/30/11	3/30/11	-2	No Exceptions Taken
TC3010-A6000A03	1	Aluminum Panel Product Data	TG1901-013	TRANS500	TURNE361	1/25/11	2/10/11	2/22/11	2/22/11	12	Make Corrections Noted
TC3010-A6000A04	1	Aluminum Panel Sample	TG1901-013	TRANS500	TURNE361	1/25/11	2/10/11	2/22/11	2/22/11	12	Make Corrections Noted
TC3010-A6000A04	2	Aluminum Panel Sample	TG1901-013	TRANS500	TURNE361	2/24/11	3/14/11	3/02/11	3/02/11	-12	Make Corrections Noted

Project Office
175 Beale St
San Francisco, CA 94105
Phone (415) 978-5700 Fax (415) 904-8119

Submittal #	Cycle	Submittal Name	Submittal Package	From Company	To Company	Date Sent	Date Due	Date Returned	Date Sent to Sub	Days Late	Status
No Spec Section (continued)											
TC3010-A6000A05	1	Grout Color Samples for joints between stone	TG1901-004	TRANS500	TURNE361	3/16/11	4/01/11	3/30/11	3/30/11	-2	Make Corrections Noted
TC3010-A6000A06	1	Waterproofing membrane behind stone	TG1901-004	TRANS500	TURNE361	3/16/11	4/01/11	3/30/11	3/30/11	-2	No Exceptions Taken
TG0501-001	1	Schedule of Values	TG0501-001	CHAUD729	TURNE361					0	Make Corrections Noted
TG0501-001	2	Schedule of Values	TG0501-001	CHAUD729	TURNE361	8/30/11	9/16/11	9/14/11	9/14/11	-2	Make Corrections Noted
TG0502-001	1	Schedule of Values	TG0502-001	BASSE606	TURNE361					0	Make Corrections Noted
TG0502-001	2	Schedule of Values	TG0502-001	BASSE606	TURNE361					0	Make Corrections Noted
TG0502-001	3	Schedule of Values	TG0502-001	BASSE606	TURNE361	8/30/11	9/16/11	9/14/11	9/14/11	-2	Make Corrections Noted
TG0502-001	4	Schedule of Values	TG0502-001	BASSE606	TURNE361	9/14/11	9/30/11	10/05/11	10/05/11	5	Make Corrections Noted
TG0507-001	1	Schedule of Values	TG0507-001	CLIPP580	TURNE361					0	Make Corrections Noted
TG0507-001	2	Schedule of Values	TG0507-001	CLIPP580	TURNE361	8/30/11	9/16/11	9/14/11	9/14/11	-2	Make Corrections Noted
TG2010-C0001A01	1	301 Mission - Asphalt Pavers Product Data	TG1901-017	TRANS500	TURNE361	1/11/11	1/27/11	1/27/11	2/08/11	0	Make Corrections Noted
TG2010-C0001A02	1	301 Mission - Asphalt Paver Samples	TG1901-017	TRANS500	TURNE361	1/11/11	1/27/11	1/27/11	2/08/11	0	No Exceptions Taken
TG2010-C0001A03	1	301 Mission - Asphalt Paver Mastic Product Data	TG1901-017	TRANS500	TURNE361	1/11/11	1/27/11	1/27/11	2/08/11	0	Make Corrections Noted
TG2040-A0000A01	1	Site Logistics Plan	TG1901-005	TRANS500	TURNE361	12/07/10	12/23/10	12/13/10	12/16/10	-10	No Exceptions Taken
TG2040-C2000A01	1	Temporary Barrier	TG1901-003	TRANS500	TURNE361	12/07/10	12/23/10	12/13/10	12/16/10	-10	No Exceptions Taken
TG2040-C2000A02	1	Temporary Chainlink Fence	TG1901-003	TRANS500	TURNE361	12/07/10	12/23/10	12/13/10	12/16/10	-10	No Exceptions Taken
TG2040-S0001A01	1	Concrete Shop Drawing	TG1901-001	TRANS500	TURNE361	1/25/11	2/10/11	2/03/11	2/04/11	-7	Make Corrections Noted
TG2040-S0001A01	2	Concrete Shop Drawing	TG1901-001	TRANS500	TURNE361	2/24/11	3/14/11	3/14/11	3/15/11	0	Make Corrections Noted
TG4010-015313A02	1	PG&E Phase II Utilities at Fremont St.	TG0300-903	BALFO900	TURNE361	1/04/12	1/20/12	1/06/12	1/04/12	-14	Make Corrections Noted
TG4010-015313A02	2	PG&E Phase II Utilities at Fremont St.	TG0300-903	BALFO900	TURNE361	1/06/12	1/24/12	1/30/12	1/30/12	6	Make Corrections Noted
TZ1010-000000A07	1	Injury and Illness Prevention Plan	TG0300-111	BALFO900	TURNE361	3/23/11	4/08/11	3/29/11	3/25/11	-10	For Record Only
TZ1010-000000A07	2	Injury and Illness Prevention Plan	TG0300-111	BALFO900	TURNE361	4/06/11	4/22/11	4/07/11	4/07/11	-15	For Record Only
TZ1010-000000A08	1	Site Logistics - General Plan	TG0300-021	BALFO900	TURNE361	3/02/11	3/18/11	3/10/11	3/10/11	-8	Void
TZ1010-000000A08	2	Site Logistics - General Plan	TG0300-021	BALFO900	TURNE361		3/03/11	3/10/11	3/10/11	7	Void
TZ1010-000000A09	1	Site Logistics - Temporary Lighting Plan	TG0300-030	BALFO900	TURNE361	7/13/11	7/29/11	7/15/11	7/15/11	-14	For Record Only
TZ1010-000000A09	2	Site Logistics - Temporary Lighting Plan	TG0300-030	BALFO900	TURNE361	7/15/11	8/02/11	8/03/11	8/03/11	1	For Record Only

Project Office
175 Beale St
San Francisco, CA 94105
Phone (415) 978-5700 Fax (415) 904-8119

Submittal #	Cycle	Submittal Name	Submittal Package	From Company	To Company	Date Sent	Date Due	Date Returned	Date Sent to Sub	Days Late	Status
No Spec Section (continued)											
TZ1010-000000A10	1	Site Logistics - Access Plan	TG0300-040	BALFO900	TURNE361	3/02/11	3/18/11	3/10/11	3/10/11	-8	Void
TZ1010-000000A10	2	Site Logistics - Access Plan	TG0300-040	BALFO900	TURNE361		3/10/11	3/10/11	3/10/11	0	Void
TZ1010-000000A11	1	Site Logistics - Perimeter Barrier/Fence Plan	TG0300-050	BALFO900	TURNE361	3/02/11	3/18/11	3/10/11	3/10/11	-8	Void
TZ1010-000000A11	2	Site Logistics - Perimeter Barrier/Fence Plan	TG0300-050	BALFO900	TURNE361		3/10/11	3/10/11	3/10/11	0	Void
TZ1030-011570A11	1	Traffic Control Plans PG&E Phase II at Fremont	TG0300-177	BALFO900	SANDI612					0	Not Reviewed
TZ1030-015313A19	1	NOT USED			TURNE361		7/11/11			0	Not Used
TZ1030-015313A20	1	NOT USED			TURNE361		7/11/11			0	Not Used
TZ1030-015313A28	1	BSE - Access Trustle Material Product Data	TG0300-282	BALFO900	TURNE361	2/23/12	3/12/12			0	For Record Only
TZ1030-015313A29	1	BSE - Trestle Pile Material Product Data	TG0300-283	BALFO900	TURNE361					0	Open
TZ1030-315500A16	1	Internal Bracing - Erection Drawings (Shop)	TG0300-551	BALFO900	TURNE361	1/26/12	2/13/12	2/23/12	2/23/12	10	For Record Only
UA0000-000610F02	1	M Squared P&P Bond	TG0402-000	MSQUA902	TURNE361	10/10/11	10/26/11	10/12/11	10/12/11	-14	For Record Only
UA0000-000805F02	1	M Squared - Insurance Certificates	TG0402-000	MSQUA902	TURNE361	10/10/11	10/26/11	10/12/11	10/12/11	-14	For Record Only
UA0000-011026	1	4.2 Schedule of Values	TG0402-025	MSQUA902	TURNE361	11/11/11	12/01/11	11/29/11	11/29/11	-2	Make Corrections Noted
UA0000-011340F02	1	TG04.2 Signed Agreement	TG0402-000	MSQUA902	TURNE361	10/10/11	10/26/11	10/12/11	10/12/11	-14	For Record Only
UA0000-011720A01	1	As Built - U-3007	TG0405-055	TRINE814	TURNE361	11/11/11	12/01/11	1/12/12	1/13/12	42	No Exceptions Taken
UA0000-011720A02	1	As Built - U-3008	TG0405-055	TRINE814	TURNE361	11/11/11	12/01/11	1/12/12	1/13/12	42	No Exceptions Taken
UA0000-011720A03	1	As Built - U-3009	TG0405-055	TRINE814	TURNE361	11/11/11	12/01/11	1/12/12	1/13/12	42	No Exceptions Taken
UA0000-011720A04	1	As Built - U-3021	TG0405-055	TRINE814	TURNE361	11/11/11	12/01/11	1/12/12	1/13/12	42	No Exceptions Taken
UA0000-011720A05	1	As Built - U-3023	TG0405-055	TRINE814	TURNE361	11/11/11	12/01/11	1/12/12	1/13/12	42	No Exceptions Taken
UA0000-011720A06	1	As Built - U-3031	TG0405-055	TRINE814	TURNE361	11/11/11	12/01/11	1/12/12	1/13/12	42	No Exceptions Taken
UA0000-011720A07	1	As Built - U-3032	TG0405-055	TRINE814	TURNE361	11/11/11	12/01/11	1/12/12	1/13/12	42	No Exceptions Taken
UA0000-011720A08	1	As Built - U-3033	TG0405-055	TRINE814	TURNE361	11/11/11	12/01/11	1/12/12	1/13/12	42	No Exceptions Taken
UA0000-011720A09	1	As Built - U-3107	TG0405-055	TRINE814	TURNE361	11/11/11	12/01/11	1/12/12	1/13/12	42	No Exceptions Taken
UA0000-011720A10	1	As Built - U-3108	TG0405-055	TRINE814	TURNE361	11/11/11	12/01/11	1/12/12	1/13/12	42	No Exceptions Taken
UA0000-011720A11	1	As Built - U-3109	TG0405-055	TRINE814	TURNE361	11/11/11	12/01/11	1/12/12	1/13/12	42	No Exceptions Taken
UA0000-011720A12	1	As Built - U-3201	TG0405-055	TRINE814	TURNE361	11/11/11	12/01/11	1/12/12	1/13/12	42	No Exceptions Taken
UA0000-011720A13	1	As Built - U-3407	TG0405-055	TRINE814	TURNE361	11/11/11	12/01/11	1/12/12	1/13/12	42	No Exceptions Taken
UA0000-011720A14	1	As Built - U-3408	TG0405-055	TRINE814	TURNE361	11/11/11	12/01/11	1/12/12	1/13/12	42	No Exceptions Taken
UA0000-011720A15	1	As Built - U-3409	TG0405-055	TRINE814	TURNE361	11/11/11	12/01/11	1/12/12	1/13/12	42	No Exceptions Taken
UA0000-011720A16	1	As Built - U-3410	TG0405-055	TRINE814	TURNE361	11/11/11	12/01/11	1/12/12	1/13/12	42	No Exceptions Taken
UA0000-011720A17	1	As Built - U-3010	TG0434-031	MSQUA902	TURNE361	3/01/12	3/19/12	3/12/12	3/12/12	-7	Revise and Resubmit

Project Office
175 Beale St
San Francisco, CA 94105
Phone (415) 978-5700 Fax (415) 904-8119

Submittal #	Cycle	Submittal Name	Submittal Package	From Company	To Company	Date Sent	Date Due	Date Returned	Date Sent to Sub	Days Late	Status
No Spec Section (continued)											
UA0000-011720A18	1	As Built - U-3011	TG0434-031	MSQUA902	TURNE361	3/01/12	3/19/12	3/12/12	3/12/12	-7	Revise and Resubmit
UA0000-011720A19	1	As Built - U-3012	TG0434-031	MSQUA902	TURNE361	3/01/12	3/19/12	3/12/12	3/12/12	-7	Revise and Resubmit
UA0000-011720A20	1	As Built - U-3110	TG0434-031	MSQUA902	TURNE361	3/01/12	3/19/12	3/12/12	3/12/12	-7	Revise and Resubmit
UA0000-011720A21	1	As Built - U-3111	TG0434-031	MSQUA902	TURNE361	3/01/12	3/19/12	3/12/12	3/12/12	-7	Revise and Resubmit
UA0000-011720A22	1	As Built - U-3112	TG0434-031	MSQUA902	TURNE361	3/01/12	3/19/12	3/12/12	3/12/12	-7	Revise and Resubmit
UA0000-011720A23	1	As Built - U-3116	TG0434-031	MSQUA902	TURNE361	3/01/12	3/19/12	3/12/12	3/12/12	-7	Revise and Resubmit
UA0000-011720A24	1	As Built - U-3117	TG0434-031	MSQUA902	TURNE361	3/01/12	3/19/12	3/12/12	3/12/12	-7	Revise and Resubmit
UA0000-011720A25	1	As Built - U-3118	TG0434-031	MSQUA902	TURNE361	3/01/12	3/19/12	3/12/12	3/12/12	-7	Revise and Resubmit
UA0000-011720A26	1	As Built - U-3119	TG0434-031	MSQUA902	TURNE361	3/01/12	3/19/12	3/12/12	3/12/12	-7	Revise and Resubmit
UA0000-011720A27	1	As Built - U-3120	TG0434-031	MSQUA902	TURNE361	3/01/12	3/19/12	3/12/12	3/12/12	-7	Revise and Resubmit
UA0000-011720A28	1	As Built - U-3124	TG0434-031	MSQUA902	TURNE361	3/01/12	3/19/12	3/12/12	3/12/12	-7	Revise and Resubmit
UA0000-011720A29	1	As Built - U-3125	TG0434-031	MSQUA902	TURNE361	3/01/12	3/19/12	3/12/12	3/12/12	-7	Revise and Resubmit
UA0000-011720A30	1	As Built - U-3012	TG0401-011	MSQUA902	TURNE361	3/01/12	3/20/12	3/08/12	3/08/12	-12	Revise and Resubmit
UA0000-011720A31	1	As Built - U-3013	TG0401-011	MSQUA902	TURNE361	3/01/12	3/19/12	3/08/12	3/08/12	-11	Revise and Resubmit
UA0000-011720A32	1	As Built - U-3022	TG0401-011	MSQUA902	TURNE361	3/01/12	3/19/12	3/08/12	3/08/12	-11	Revise and Resubmit
UA0000-011720A33	1	As Built - U-3112	TG0401-011	MSQUA902	TURNE361	3/01/12	3/19/12	3/08/12	3/08/12	-11	Revise and Resubmit
UA0000-011720A34	1	As Built - U-3113	TG0401-011	MSQUA902	TURNE361	3/01/12	3/19/12	3/08/12	3/08/12	-11	Revise and Resubmit
UA0000-011740A01	1	Warranties	TG0405-056	TRINE814	TURNE361	11/11/11	12/01/11	11/15/11	11/15/11	-16	Submitted
UA0000-011740A01	2	Warranties	TG0405-056	TRINE814	TURNE361	11/18/11	12/08/11			0	Submitted
UG1020-020630E01	1	AWSS Potholing Plan	TG0402-022	MSQUA902	TURNE361	9/21/11	10/07/11	10/12/11	10/12/11	5	Make Corrections Noted
UG1020-020630E01	2	AWSS Potholing Plan	TG0402-022	MSQUA902	TURNE361	10/24/11	11/09/11	10/27/11	10/27/11	-13	Make Corrections Noted
UG1040-011350A01	1	Hazmat Environmental Health & Safety Plan	TG0405-020	TRINE814	TURNE361	1/13/11	1/31/11	1/26/11	1/26/11	-5	Not Reviewed
UG1040-011350A02	1	Contaminated & Hazardous Soil Excavation Plan	TG0405-021	TRINE814	TURNE361		11/19/10			0	Closed
UG3010-020630A01	1	AWSS Pothole Findings Location 1	TG0402-024	MSQUA902	TURNE361	11/04/11	11/22/11	2/13/12	2/13/12	83	Make Corrections Noted
UG3010-02530B01	1	M Squared - Dewatering Plan	TG0402-020	MSQUA902	TURNE361	11/22/11	12/12/11	11/22/11	11/22/11	-20	Make Corrections Noted
UG3010-02630A02	1	AWSS Pothole Findings Second St to First St	TG0402-024	MSQUA902	TURNE361	2/13/12	2/29/12	2/29/12	2/29/12	0	For Record Only
UG3010-027230C11	1	AWSS Castings-Foundry	TG0402-011	MSQUA902	TURNE361	8/08/11	8/24/11	8/24/11	8/24/11	0	No Exceptions Taken
UG3010-027230C11	2	AWSS Castings-Foundry	TG0402-011	MSQUA902	TURNE361	2/03/12	2/21/12	8/22/11	8/22/11	-183	No Exceptions Taken
UG3010-027230C11	3	AWSS Castings-Foundry	TG0402-011	MSQUA902	TURNE361	2/03/12	2/21/12	8/22/11	8/22/11	-183	No Exceptions Taken
UG3010-027280B01	1	M Squared Valve Drain Line Materail	TG0402-023	MSQUA902	TURNE361	10/27/11	11/14/11	12/05/11	12/05/11	21	Make Corrections Noted

Project Office
175 Beale St
San Francisco, CA 94105
Phone (415) 978-5700 Fax (415) 904-8119

Submittal #	Cycle	Submittal Name	Submittal Package	From Company	To Company	Date Sent	Date Due	Date Returned	Date Sent to Sub	Days Late	Status
No Spec Section (continued)											
UG3010-027280B01	2	M Squared Valve Drain Line Materail	TG0402-023	MSQUA902	TURNE361	1/25/12	2/10/12	1/30/12	1/30/12	-11	Make Corrections Noted
UG3020-333410B01	1	Sludge Line Material	TG0406-016	MSQUA902	TURNE361	3/20/12	4/05/12			0	Submitted
UG9090-000000A01	1	Plywood Barrier Wall	TG1901-015	TRANS500	TURNE361	12/23/10	1/13/11	12/28/10	1/03/11	-16	No Exceptions Taken
WO0000-000000W01	1	Trailer Permit Drawings	WO-TRA0001	WILLI185	TURNE361	7/08/11	7/26/11	8/16/11	8/16/11	21	For Record Only
WO0000-000000W02	1	Trailer - Ramp Calculations	WO-TRA0001	WILLI185	TURNE361	7/08/11	7/26/11	8/16/11	8/16/11	21	For Record Only
WO0000-000000W03	1	Trailer - Building Calculations	WO-TRA0001	WILLI185	TURNE361	7/08/11	7/26/11	8/16/11	8/16/11	21	For Record Only
WO0000-000000W04	1	Trailer - Stair Ramp Details	WO-TRA0001	WILLI185	TURNE361	7/08/11	7/26/11	8/16/11	8/16/11	21	For Record Only
WO0000-000000W05	1	Backflow Preventer	SBPKG0001	MSQUA902	AECOM000	6/02/11	6/20/11	10/03/11	10/03/11	105	No Exceptions Taken
Spec Section 00 00 00											
T00000-100000A10	1	Transworld 1 Year Warranty		TRANS500	TURNE361	12/22/11	1/11/12	1/18/12	1/25/12	7	Rejected
T00000-100000A11	1	Cetco Warranty		TRANS500	TURNE361	12/22/11	1/11/12	1/18/12	1/25/12	7	Rejected
T00000-100000A12	1	Transworld - As-Built Drawings	TG1901-030	TRANS500	TURNE361	12/22/11	1/11/12	1/18/12	1/25/12	7	Submitted
T00000-100000A12	2	Transworld - As-Built Drawings	TG1901-030	TRANS500	TURNE361	3/05/12	3/21/12			0	Submitted
TG9090-000000A01	1	301 Mission Sound Wall Design	TG0300-902	BALFO900	TURNE361	10/19/11	10/19/11	10/21/11	10/24/11	2	Make Corrections Noted
TG9090-000000A01	2	301 Mission Sound Wall Design	TG0300-902	BALFO900	TURNE361	11/14/11	11/14/11	11/14/11	11/14/11	0	Make Corrections Noted
TG9090-000000A01	3	301 Mission Sound Wall Design	TG0300-902	BALFO900	TURNE361	11/14/11	11/14/11	12/08/11	12/08/11	24	Make Corrections Noted
Spec Section 00 04 66											
TZ1010-000000A18	1	Certificate of Subcontractor Regarding Apprenticeship Training Program	TG0300-020	BALFO900	TURNE361	3/21/11	4/06/11	3/21/11	3/21/11	-16	For Record Only
Spec Section 00 06 10											
TZ1010-000000A19	1	Performance and Payment Bond	TG0300-020	BALFO900	TURNE361	3/21/11	4/06/11	3/21/11	3/21/11	-16	For Record Only
UA0000-000610A01	1	P&P Bonds	TG0405-049	TRINE814	TURNE361	2/17/11	3/08/11	2/28/11	2/28/11	-8	For Record Only
Spec Section 00 07 00											
TZ1010-000700A01	1	Hourly Labor Rates	TG0300-020	BALFO900	TURNE361	3/21/11	4/06/11	3/21/11	3/21/11	-16	For Record Only
UA0000-000700A01	1	Trinet - Labor Rates	TG0405-047	TRINE814	TURNE361	2/14/11	3/03/11	2/18/11	2/18/11	-13	Make Corrections Noted
UA0000-000700A01	2	Trinet - Labor Rates	TG0405-047	TRINE814	TURNE361	5/10/11	5/26/11	5/23/11	5/23/11	-3	Make Corrections Noted
UA0000-000700B01	1	M Squared - Labor Rates	TG0434-030	MSQUA902	TURNE361	2/10/11	3/01/11	2/18/11	2/18/11	-11	Make Corrections Noted
UA0000-000700B01	2	M Squared - Labor Rates	TG0434-030	MSQUA902	TURNE361	3/22/11	4/07/11	4/15/11	4/15/11	8	Make Corrections Noted

Project Office
175 Beale St
San Francisco, CA 94105
Phone (415) 978-5700 Fax (415) 904-8119

Submittal #	Cycle	Submittal Name	Submittal Package	From Company	To Company	Date Sent	Date Due	Date Returned	Date Sent to Sub	Days Late	Status
Spec Section 00 07 00 (continued)											
UA0000-000700B01	3	M Squared - Labor Rates	TG0434-030	MSQUA902	TURNE361	7/19/11	8/04/11	8/23/11	8/23/11	19	Make Corrections Noted
Spec Section 00 08 05											
TZ1010-000000A17	1	Insurance Certificates and Endorsements	TG0300-020	BALFO900	TURNE361	3/21/11	4/06/11	3/21/11	3/21/11	-16	For Record Only
UA0000-000805A01	1	Certificates of Insurance	TG0405-049	TRINE814	TURNE361	2/17/11	3/08/11	2/28/11	2/28/11	-8	For Record Only
Spec Section 00 08 13											
UA0000-000813A01	1	Noise Mitigation Plan	TG0405-029	TRINE814	TURNE361	1/13/11	1/31/11	11/29/10	11/29/10	-63	Not Reviewed
WO0000-000813W01	1	Air Quality Management	WO-EPP0001	30	TURNE361	1/10/11	1/26/11	1/11/11		-15	Make Corrections Noted
WO0000-000813W01	2	Air Quality Management	WO-EPP0001	30	TURNE361	1/11/11	1/27/11	1/12/11		-15	Make Corrections Noted
WO0000-000813W01	3	Air Quality Management	WO-EPP0001	30	TURNE361	1/12/11	1/28/11	1/27/11	1/27/11	-1	Make Corrections Noted
WO0000-000813W01	4	Air Quality Management	WO-EPP0001	30	TURNE361	4/11/11	4/27/11	4/28/11	11/09/11	1	Make Corrections Noted
WO0000-000813W01	5	Air Quality Management	WO-EPP0001	30	TURNE361	1/16/12	2/01/12	2/02/12	2/02/12	1	Make Corrections Noted
WO0000-000813W02	1	Noise and Vibration Mitigation Management Plan	WO-NMM0001	30	TURNE361	4/11/11	4/27/11	4/28/11	5/03/11	1	Make Corrections Noted
WO0000-000813W02	2	Noise and Vibration Mitigation Management Plan	WO-NMM0001	30	TURNE361		4/11/11			0	Make Corrections Noted
WO0000-000813W02	3	Noise and Vibration Mitigation Management Plan	WO-NMM0001	30	TURNE361	10/04/11	10/20/11	11/04/11	11/09/11	15	Make Corrections Noted
WO0000-000813W02	4	Noise and Vibration Mitigation Management Plan	WO-NMM0001	30	TURNE361	1/16/12	2/01/12	2/02/12	2/02/12	1	Make Corrections Noted
WO0000-000813W03	1	Noise, Dust, and Odor Abatement Plan	WO-NDO0001	30	TURNE361	6/28/11	7/15/11	7/08/11	7/08/11	-7	Rejected
Spec Section 00 08 15											
TZ1010-000815A01	1	Solid Waste Management Plan	TG0300-060	BALFO900	TURNE361	4/20/11	5/06/11	5/06/11	5/09/11	0	Rejected
WO0000-000815W01	1	Construction Waste Management	WO-CDD0001	30	TURNE361	1/11/11	1/27/11	2/02/11	2/02/11	6	No Exceptions Taken
WO0000-000815W01	2	Construction Waste Management	WO-CDD0001	30	TURNE361	10/04/11	10/20/11	5/06/11	5/06/11	-167	No Exceptions Taken
WO0000-000815W01	3	Construction Waste Management	WO-CDD0001	30	TURNE361	10/04/11	10/20/11	11/03/11	11/09/11	14	No Exceptions Taken
WO0000-000815W01	4	Construction Waste Management	WO-CDD0001	30	TURNE361	1/16/12	2/01/12	2/21/12	2/23/12	20	No Exceptions Taken
WO0000-000815W01	5	Construction Waste Management	WO-CDD0001	30	TURNE361	2/23/12	3/12/12	3/12/12	3/12/12	0	No Exceptions Taken
WO0000-000815W02	1	Waste Management Plan for LEED	WO-WMM0001	30	TURNE361	2/01/12	2/17/12			0	For Record Only
Spec Section 00 08 20											
TZ1010-000820A01	1	CityBuild Workforce Projection Form	TG0300-022	BALFO900	TURNE361	4/05/11	4/21/11	4/18/11	4/19/11	-3	No Exceptions Taken
UA0000-000820A01	1	City Build Workforce Projection	TG0405-041	TRINE814	TURNE361	1/05/11	1/21/11	1/07/11	1/07/11	-14	No Exceptions Taken

Project Office
175 Beale St
San Francisco, CA 94105
Phone (415) 978-5700 Fax (415) 904-8119

Submittal #	Cycle	Submittal Name	Submittal Package	From Company	To Company	Date Sent	Date Due	Date Returned	Date Sent to Sub	Days Late	Status
Spec Section 00 08 20 (continued)											
UA0000-000820A01	2	City Build Workforce Projection	TG0405-041	TRINE814	TRINE814	1/25/11	2/10/11	1/25/11	1/25/11	-16	No Exceptions Taken
UA0000-000820A01	3	City Build Workforce Projection	TG0405-041	TRINE814	TURNE361	8/31/11	9/19/11	8/31/11	8/31/11	-19	No Exceptions Taken
UA0000-000820D01	1	City Build Workforce Projection	TG0406-002	MSQUA902	TURNE361	3/30/11	4/15/11	4/05/11	4/05/11	-10	No Exceptions Taken
Spec Section 000610											
UA0000-000610B01	1	P&P Bonds	TG0434-011	MSQUA902	TURNE361	1/20/11	1/20/11	1/31/11	1/31/11	11	For Record Only
UA0000-000610C01	1	Bass P&P Bond	TG0502-000	01	TURNE361	9/15/11	10/03/11			0	For Record Only
UA0000-000610C02	1	Executed P&P Bonds	TG1901-000	01	TURNE361	9/15/11	10/03/11	9/16/11		-17	For Record Only
Spec Section 000700											
WO0000-011310W01	1	Webcor / Obayashi Baseline Schedule Narrative	WO-SCH0001	30	TRANS467	10/27/10	11/12/10	11/16/10	11/16/10	4	No Exceptions Taken
WO0000-011310W01	2	Webcor / Obayashi Baseline Schedule Narrative	WO-SCH0001	30	TRANS467	11/22/10	12/08/10	12/13/10	12/14/10	5	No Exceptions Taken
WO0000-011310W01	3	Webcor / Obayashi Baseline Schedule Narrative	WO-SCH0001	30	TRANS467	12/23/10	1/13/11	1/10/11		-3	No Exceptions Taken
WO0000-011310W02	1	Webcor / Obayashi Baseline Schedule (P6 file)	WO-SCH0001	30	TRANS467	10/27/10	11/12/10	11/16/10	11/16/10	4	No Exceptions Taken
WO0000-011310W02	2	Webcor / Obayashi Baseline Schedule (P6 file)	WO-SCH0001	30	TRANS467	11/22/10	12/08/10	12/13/10	12/14/10	5	No Exceptions Taken
WO0000-011310W02	3	Webcor / Obayashi Baseline Schedule (P6 file)	WO-SCH0001	30	TRANS467	12/23/10	1/13/11	1/10/11		-3	No Exceptions Taken
WO0000-011310W03	1	Webcor / Obayashi Baseline Schedule (PDFfile)	WO-SCH0001	30	TRANS467	10/27/10	11/12/10	11/16/10	11/16/10	4	No Exceptions Taken
WO0000-011310W03	2	Webcor / Obayashi Baseline Schedule (PDFfile)	WO-SCH0001	30	TRANS467	11/22/10	12/08/10	12/13/10	12/14/10	5	No Exceptions Taken
WO0000-011310W03	3	Webcor / Obayashi Baseline Schedule (PDFfile)	WO-SCH0001	30	TRANS467	12/23/10	1/13/11	1/10/11		-3	No Exceptions Taken
WO0000-011310W04	1	Webcor / Obayashi Baseline Schedule ACTIVITY ID	WO-SCH0001	30	TRANS467	10/27/10	11/12/10	11/16/10	11/16/10	4	No Exceptions Taken
WO0000-011310W04	2	Webcor / Obayashi Baseline Schedule ACTIVITY ID	WO-SCH0001	30	TRANS467	11/22/10	12/08/10	12/13/10	12/14/10	5	No Exceptions Taken
WO0000-011310W04	3	Webcor / Obayashi Baseline Schedule ACTIVITY ID	WO-SCH0001	30	TRANS467	12/23/10	1/13/11	1/10/11		-3	No Exceptions Taken
WO0000-011310W05	1	Webcor / Obayashi Baseline Schedule CRITICAL PATH	WO-SCH0001	30	TRANS467	10/27/10	11/12/10	11/16/10	11/16/10	4	No Exceptions Taken
WO0000-011310W05	2	Webcor / Obayashi Baseline Schedule CRITICAL PATH	WO-SCH0001	30	TRANS467	11/22/10	12/08/10	12/13/10	12/14/10	5	No Exceptions Taken
WO0000-011310W05	3	Webcor / Obayashi Baseline Schedule CRITICAL PATH	WO-SCH0001	30	TRANS467	12/23/10	1/13/11	1/10/11		-3	No Exceptions Taken
WO0000-011310W06	1	Webcor / Obayashi Baseline Schedule NEAR CRITICAL PATH ACTIVITIES	WO-SCH0001	30	TRANS467	10/27/10	11/12/10	11/16/10	11/16/10	4	No Exceptions Taken
WO0000-011310W06	2	Webcor / Obayashi Baseline Schedule NEAR CRITICAL PATH ACTIVITIES	WO-SCH0001	30	TRANS467	11/22/10	12/08/10	12/13/10	12/14/10	5	No Exceptions Taken
WO0000-011310W06	3	Webcor / Obayashi Baseline Schedule NEAR CRITICAL PATH ACTIVITIES	WO-SCH0001	30	TRANS467	12/23/10	1/13/11	1/10/11		-3	No Exceptions Taken
WO0000-011310W07	1	Webcor / Obayashi Baseline Schedule PRED SUCCES	WO-SCH0001	30	TRANS467	10/27/10	11/12/10	11/16/10	11/16/10	4	No Exceptions Taken

Project Office
175 Beale St
San Francisco, CA 94105
Phone (415) 978-5700 Fax (415) 904-8119

Submittal #	Cycle	Submittal Name	Submittal Package	From Company	To Company	Date Sent	Date Due	Date Returned	Date Sent to Sub	Days Late	Status
Spec Section 000700 (continued)											
WO0000-011310W07	2	Webcor / Obayashi Baseline Schedule PRED SUCCES	WO-SCH0001	30	TRANS467	11/22/10	12/08/10	12/13/10	12/14/10	5	No Exceptions Taken
WO0000-011310W07	3	Webcor / Obayashi Baseline Schedule PRED SUCCES	WO-SCH0001	30	TRANS467	12/23/10	1/13/11	1/10/11		-3	No Exceptions Taken
WO0000-011310W08	1	Webcor / Obayashi Baseline Schedule RESPONSIBILITY	WO-SCH0001	30	TRANS467	10/27/10	11/12/10	11/16/10	11/16/10	4	No Exceptions Taken
WO0000-011310W08	2	Webcor / Obayashi Baseline Schedule RESPONSIBILITY	WO-SCH0001	30	TRANS467	11/22/10	12/08/10	12/13/10	12/14/10	5	No Exceptions Taken
WO0000-011310W08	3	Webcor / Obayashi Baseline Schedule RESPONSIBILITY	WO-SCH0001	30	TRANS467	12/23/10	1/13/11	1/10/11		-3	No Exceptions Taken
WO0000-011310W09	1	Webcor / Obayashi Baseline Schedule TOTAL FLOAT	WO-SCH0001	30	TRANS467	10/27/10	11/12/10	11/16/10	11/16/10	4	No Exceptions Taken
WO0000-011310W09	2	Webcor / Obayashi Baseline Schedule TOTAL FLOAT	WO-SCH0001	30	TRANS467	11/22/10	12/08/10	12/13/10	12/14/10	5	No Exceptions Taken
WO0000-011310W09	3	Webcor / Obayashi Baseline Schedule TOTAL FLOAT	WO-SCH0001	30	TRANS467	12/23/10	1/13/11	1/10/11		-3	No Exceptions Taken
Spec Section 000805											
UA0000-000805B01	1	Certificate of Insurance	TG0434-011	MSQUA902	TURNE361	1/20/11	1/20/11	1/31/11	1/31/11	11	For Record Only
UA0000-000805C01	1	Bass - Insurance	TG0502-000	01	TURNE361	9/15/11	10/03/11			0	For Record Only
UA0000-000805C02	1	Transworld Insurace	TG1901-000	01	TURNE361	9/15/11	10/03/11	9/16/11		-17	For Record Only
Spec Section 000813											
UA0000-000813B01	1	Noise Mitigation Plan	TG0434-013	MSQUA902	TURNE361	1/12/11	1/28/11	1/20/11	1/20/11	-8	No Exceptions Taken
Spec Section 002723											
UG3010-002723C01	1	AWSS Welding Certification	TG0406-015	MSQUA902	TURNE361	7/18/11	8/03/11	8/03/11	8/03/11	0	Make Corrections Noted
Spec Section 01 10 26											
TA0000-011026A01	1	Transworld - Schedule of Values	TG1901-009	01	TURNE361	12/08/10	12/28/10	12/13/10		-15	No Exceptions Taken
TZ1010-011026A01	1	Schedule of Values	TG0300-070	BALFO900	TURNE361	2/14/11	3/03/11	3/07/11	3/08/11	4	Make Corrections Noted
TZ1010-011026A01	2	Schedule of Values	TG0300-070	BALFO900	TURNE361	3/21/11	4/06/11	3/25/11	3/25/11	-12	Make Corrections Noted
UA0000-011026B01	1	Schedule of Values	TG0434-012	MSQUA902	TURNE361	1/17/11	2/02/11	1/24/11	1/24/11	-9	Make Corrections Noted
UA0000-011026B01	2	Schedule of Values	TG0434-012	MSQUA902	TURNE361	1/25/11	2/10/11	1/27/11		-14	Make Corrections Noted
UA0000-011026B01	3	Schedule of Values	TG0434-012	MSQUA902	TURNE361	1/27/11	2/14/11	2/02/11	2/02/11	-12	Make Corrections Noted
UA0000-011026C01	1	Schedule of Values	TG0401-003	MSQUA902	TURNE361	3/10/11	3/28/11	3/30/11	3/31/11	2	Make Corrections Noted
UA0000-011026D01	1	Schedule of Values	TG0406-001	MSQUA902	TURNE361	4/12/11	4/28/11	4/21/11	4/21/11	-7	No Exceptions Taken
WO0000-011026W01	1	W-O Schedule of Values	WO-SOV001	01	TURNE361	11/30/10	12/09/10	12/13/10		4	No Exceptions Taken

Project Office
175 Beale St
San Francisco, CA 94105
Phone (415) 978-5700 Fax (415) 904-8119

Submittal #	Cycle	Submittal Name	Submittal Package	From Company	To Company	Date Sent	Date Due	Date Returned	Date Sent to Sub	Days Late	Status
Spec Section 01 10 26 (continued)											
WO0000-011026W01	2	W-O Schedule of Values	WO-SOV001	01	TURNE361	12/20/10	1/03/11	12/22/10		-12	No Exceptions Taken
Spec Section 01 10 50											
TZ1010-011050A01	1	Surveyor Information	TG0300-008	BALFO900	TURNE361	2/14/11	3/03/11	2/23/11	2/23/11	-8	No Exceptions Taken
TZ1010-011050A02	1	Site Drawing Verifying Contract Drawing Elevations and Locations	TG0300-090	BALFO900	TURNE361	7/11/11	7/27/11	8/24/11	8/25/11	28	Revise and Resubmit
UA0000-011050A01	1	Surveyor Qualifications & Insurance	TG0405-026	TRINE814	TURNE361	11/17/10	12/03/10	11/29/10	11/29/10	-4	No Exceptions Taken
UA0000-011050C01	1	Survey & Control Points	TG0401-007	MSQUA902	TURNE361	3/11/11	3/29/11	3/15/11	3/15/11	-14	No Exceptions Taken
UA0000-011050C02	1	Surveyor Qualifications	TG0401-007	MSQUA902	TURNE361	3/11/11	3/29/11	3/15/11	3/15/11	-14	No Exceptions Taken
UA0000-011050D01	1	Survey & Control Points	TG0406-005	MSQUA902	TURNE361	4/21/11	5/09/11	4/22/11	4/25/11	-17	No Exceptions Taken
UA0000-011050D01	2	Survey & Control Points	TG0406-005	MSQUA902	TURNE361	6/10/11	6/28/11	6/09/11	6/09/11	-19	No Exceptions Taken
UA0000-011050D01	3	Survey & Control Points	TG0406-005	MSQUA902	TURNE361	8/17/11	9/02/11	8/19/11	8/19/11	-14	No Exceptions Taken
Spec Section 01 13 00											
TZ1010-000000A21	1	Submittal Schedule	TG0300-001	BALFO900	TURNE361	2/04/11	2/23/11	2/09/11	2/10/11	-14	Make Corrections Noted
TZ1010-000000A21	2	Submittal Schedule	TG0300-001	BALFO900	TURNE361	2/11/11	3/02/11	3/02/11	3/02/11	0	Make Corrections Noted
TZ1010-000000A21	3	Submittal Schedule	TG0300-001	BALFO900	TURNE361	4/05/11	4/21/11	5/03/11	5/03/11	12	Make Corrections Noted
UA0000-011300A01	1	Trinet Submittal Schedule	TG0405-030	TRINE814	TURNE361	11/16/10	12/02/10	12/08/10	12/08/10	6	Submitted
UA0000-011300C01	1	M Squared - Submittal Memo		01	TURNE361	8/31/11	9/19/11	8/31/11		-19	Void
UA0000-011300C02	1	M Squared - Submittal Memo		01	TURNE361	4/01/11	4/19/11	4/01/11		-18	Void
UA0000-011300C03	1	M Squared - Submittal Memo	TG0404-011	01	TURNE361	4/01/11	4/19/11	6/01/11		43	Void
UA0000-011300C04	1	M Squared - Submittal Memo	TG0406-012	01	TURNE361	4/01/11	4/19/11	8/31/11		134	Void
Spec Section 01 13 10											
TZ1010-011310A01	1	CPM Schedule	TG0300-010	BALFO900	TURNE361	1/27/11	2/14/11	2/02/11	2/02/11	-12	Make Corrections Noted
TZ1010-011310A01	2	CPM Schedule	TG0300-010	BALFO900	TURNE361	2/02/11	2/18/11	2/14/11	2/14/11	-4	Make Corrections Noted
TZ1010-011310A02	1	CPM Schedule in P6	TG0300-010	BALFO900	TURNE361		2/16/11			0	Make Corrections Noted
TZ1010-011310A02	2	CPM Schedule in P6	TG0300-010	BALFO900	TURNE361	2/02/11	2/18/11	2/14/11	2/14/11	-4	Make Corrections Noted
TZ1010-011310A03	1	2011-01-28 Baseline Schedule Narrative for TG03	TG0300-010	BALFO900	TURNE361		2/16/11			0	Make Corrections Noted
TZ1010-011310A03	2	2011-01-28 Baseline Schedule Narrative for TG03	TG0300-010	BALFO900	TURNE361	2/02/11	2/18/11	2/14/11	2/14/11	-4	Make Corrections Noted
WO0000-011310W10	1	Baseline Schedule Narrative for TG04.3 & TG04.4	TG0434-028	30	TURNE361	1/26/11	2/11/11	3/09/11	3/09/11	26	Make Corrections Noted

Project Office
175 Beale St
San Francisco, CA 94105
Phone (415) 978-5700 Fax (415) 904-8119

Submittal #	Cycle	Submittal Name	Submittal Package	From Company	To Company	Date Sent	Date Due	Date Returned	Date Sent to Sub	Days Late	Status
Spec Section 01 13 10 (continued)											
WO0000-011310W10	2	Baseline Schedule Narrative for TG04.3 & TG04.4	TG0434-028	30	TURNE361	3/10/11	3/28/11	3/24/11	3/24/11	-4	Make Corrections Noted
WO0000-011310W11	1	CONSTRUCTION SCHEDULE SUBMITTAL TG04.3 & TG04.4.xer	TG0434-028	30	TURNE361	1/26/11	2/11/11	3/09/11	3/09/11	26	Make Corrections Noted
WO0000-011310W11	2	CONSTRUCTION SCHEDULE SUBMITTAL TG04.3 & TG04.4.xer	TG0434-028	30	TURNE361	3/10/11	3/28/11	3/24/11	3/24/11	-4	Make Corrections Noted
WO0000-011310W12	1	CONSTRUCTION SCHEDULE SUBMITTAL TG04.3 & TG04.4.pdf	TG0434-028	30	TURNE361	1/26/11	2/11/11	3/09/11	3/09/11	26	Make Corrections Noted
WO0000-011310W12	2	CONSTRUCTION SCHEDULE SUBMITTAL TG04.3 & TG04.4.pdf	TG0434-028	30	TURNE361	3/10/11	3/28/11	3/24/11	3/24/11	-4	Make Corrections Noted
WO0000-011311W13	1	Baseline (R3) Monthly Progress Narrative	WO-SCH0002	01	TURNE361	2/01/11	2/17/11			0	Make Corrections Noted
WO0000-011311W13	2	Baseline (R3) Monthly Progress Narrative	WO-SCH0002	01	TURNE361	3/01/11	3/17/11	3/25/11	3/29/11	8	Make Corrections Noted
WO0000-011311W13	3	Baseline (R3) Monthly Progress Narrative	WO-SCH0002	01	TURNE361	4/04/11	4/20/11	4/25/11	4/26/11	5	Make Corrections Noted
WO0000-011311W13	4	Baseline (R3) Monthly Progress Narrative	WO-SCH0002	01	TURNE361	4/28/11	5/16/11	5/25/11	5/25/11	9	Make Corrections Noted
WO0000-011311W13	5	Baseline (R3) Monthly Progress Narrative	WO-SCH0002	01	TURNE361	6/01/11	6/17/11	6/20/11	6/21/11	3	Make Corrections Noted
WO0000-011311W13	6	Baseline (R3) Monthly Progress Narrative	WO-SCH0002	01	TURNE361	7/11/11	7/27/11	7/27/11		0	Make Corrections Noted
WO0000-011311W13	7	Baseline (R3) Monthly Progress Narrative	WO-SCH0002	01	TURNE361	8/09/11	8/25/11	8/31/11		6	Make Corrections Noted
WO0000-011311W13	8	Baseline (R3) Monthly Progress Narrative	WO-SCH0002	01	TURNE361	9/01/11	9/20/11	9/20/11		0	Make Corrections Noted
WO0000-011311W13	9	Baseline (R3) Monthly Progress Narrative	WO-SCH0002	01	TURNE361	10/04/11	10/20/11	10/24/11		4	Make Corrections Noted
WO0000-011311W13	10	Baseline (R3) Monthly Progress Narrative	WO-SCH0002	01	TURNE361	11/04/11	11/22/11			0	Make Corrections Noted
WO0000-011311W13	11	Baseline (R3) Monthly Progress Narrative	WO-SCH0002	01	TURNE361	12/05/11	12/21/11	12/22/11		1	Make Corrections Noted
WO0000-011311W13	12	Baseline (R3) Monthly Progress Narrative	WO-SCH0002	01	TRANS450	1/06/12	1/24/12	1/25/12		1	Make Corrections Noted
WO0000-011311W14	1	Baseline (R3) Monthly Progress Schedule.pdf	WO-SCH0002	01	TURNE361	2/01/11	2/17/11			0	Make Corrections Noted
WO0000-011311W14	2	Baseline (R3) Monthly Progress Schedule.pdf	WO-SCH0002	01	TURNE361	3/01/11	3/17/11	3/25/11	3/29/11	8	Make Corrections Noted
WO0000-011311W14	3	Baseline (R3) Monthly Progress Schedule.pdf	WO-SCH0002	01	TURNE361	4/04/11	4/20/11	4/25/11	4/26/11	5	Make Corrections Noted
WO0000-011311W14	4	Baseline (R3) Monthly Progress Schedule.pdf	WO-SCH0002	01	TURNE361	4/28/11	5/16/11	5/25/11	5/25/11	9	Make Corrections Noted
WO0000-011311W14	5	Baseline (R3) Monthly Progress Schedule.pdf	WO-SCH0002	01	TURNE361	6/01/11	6/17/11	6/20/11	6/21/11	3	Make Corrections Noted
WO0000-011311W14	6	Baseline (R3) Monthly Progress Schedule.pdf	WO-SCH0002	01	TURNE361	7/11/11	7/27/11	7/27/11		0	Make Corrections Noted

Project Office
175 Beale St
San Francisco, CA 94105
Phone (415) 978-5700 Fax (415) 904-8119

Submittal #	Cycle	Submittal Name	Submittal Package	From Company	To Company	Date Sent	Date Due	Date Returned	Date Sent to Sub	Days Late	Status
Spec Section 01 13 10 (continued)											
WO0000-011311W14	7	Baseline (R3) Monthly Progress Schedule.pdf	WO-SCH0002	01	TURNE361	8/09/11	8/25/11			0	Make Corrections Noted
WO0000-011311W14	8	Baseline (R3) Monthly Progress Schedule.pdf	WO-SCH0002	01	TURNE361	9/01/11	9/20/11	9/20/11		0	Make Corrections Noted
WO0000-011311W14	9	Baseline (R3) Monthly Progress Schedule.pdf	WO-SCH0002	01	TURNE361	10/04/11	10/20/11	10/24/11		4	Make Corrections Noted
WO0000-011311W14	10	Baseline (R3) Monthly Progress Schedule.pdf	WO-SCH0002	01	TURNE361	11/04/11	11/22/11			0	Make Corrections Noted
WO0000-011311W14	11	Baseline (R3) Monthly Progress Schedule.pdf	WO-SCH0002	01	TURNE361	12/05/11	12/21/11	12/22/11		1	Make Corrections Noted
WO0000-011311W14	12	Baseline (R3) Monthly Progress Schedule.pdf	WO-SCH0002	01	TRANS450	1/06/12	1/24/12	1/25/12		1	Make Corrections Noted
WO0000-011311W15	1	Baseline (R3) Monthly Progress Schedule.xer	WO-SCH0002	01	TURNE361	2/01/11	2/17/11			0	Make Corrections Noted
WO0000-011311W15	2	Baseline (R3) Monthly Progress Schedule.xer	WO-SCH0002	01	TURNE361	3/01/11	3/17/11	3/25/11	3/29/11	8	Make Corrections Noted
WO0000-011311W15	3	Baseline (R3) Monthly Progress Schedule.xer	WO-SCH0002	01	TURNE361	4/04/11	4/20/11	4/25/11	4/26/11	5	Make Corrections Noted
WO0000-011311W15	4	Baseline (R3) Monthly Progress Schedule.xer	WO-SCH0002	01	TURNE361	4/28/11	5/16/11	5/25/11	5/25/11	9	Make Corrections Noted
WO0000-011311W15	5	Baseline (R3) Monthly Progress Schedule.xer	WO-SCH0002	01	TURNE361	6/01/11	6/17/11	6/20/11	6/21/11	3	Make Corrections Noted
WO0000-011311W15	6	Baseline (R3) Monthly Progress Schedule.xer	WO-SCH0002	01	TURNE361	7/11/11	7/27/11	7/27/11		0	Make Corrections Noted
WO0000-011311W15	7	Baseline (R3) Monthly Progress Schedule.xer	WO-SCH0002	01	TURNE361	8/09/11	8/25/11			0	Make Corrections Noted
WO0000-011311W15	8	Baseline (R3) Monthly Progress Schedule.xer	WO-SCH0002	01	TURNE361	9/01/11	9/20/11	9/20/11		0	Make Corrections Noted
WO0000-011311W15	9	Baseline (R3) Monthly Progress Schedule.xer	WO-SCH0002	01	TURNE361	10/04/11	10/20/11	10/24/11		4	Make Corrections Noted
WO0000-011311W15	10	Baseline (R3) Monthly Progress Schedule.xer	WO-SCH0002	01	TURNE361	11/04/11	11/22/11			0	Make Corrections Noted
WO0000-011311W15	11	Baseline (R3) Monthly Progress Schedule.xer	WO-SCH0002	01	TURNE361	12/05/11	12/21/11	12/22/11		1	Make Corrections Noted
WO0000-011311W15	12	Baseline (R3) Monthly Progress Schedule.xer	WO-SCH0002	01	TRANS450	1/06/12	1/24/12	1/25/12		1	Make Corrections Noted
WO0000-011311W16	1	Baseline(R3) Weekly Status Reports.pdf	WO-SCH0002	01	TURNE361	2/01/11	2/17/11			0	Make Corrections Noted
WO0000-011311W16	2	Baseline(R3) Weekly Status Reports.pdf	WO-SCH0002	01	TURNE361	3/01/11	3/17/11	3/25/11	3/29/11	8	Make Corrections Noted
WO0000-011311W16	3	Baseline(R3) Weekly Status Reports.pdf	WO-SCH0002	01	TURNE361	4/04/11	4/20/11	4/25/11	4/26/11	5	Make Corrections Noted
WO0000-011311W16	4	Baseline(R3) Weekly Status Reports.pdf	WO-SCH0002	01	TURNE361	4/28/11	5/16/11	5/25/11	5/25/11	9	Make Corrections Noted
WO0000-011311W16	5	Baseline(R3) Weekly Status Reports.pdf	WO-SCH0002	01	TURNE361	6/01/11	6/17/11	6/20/11	6/21/11	3	Make Corrections Noted

Project Office
175 Beale St
San Francisco, CA 94105
Phone (415) 978-5700 Fax (415) 904-8119

Submittal #	Cycle	Submittal Name	Submittal Package	From Company	To Company	Date Sent	Date Due	Date Returned	Date Sent to Sub	Days Late	Status
Spec Section 01 13 10 (continued)											
WO0000-011311W16	6	Baseline(R3) Weekly Status Reports.pdf	WO-SCH0002	01	TURNE361	7/11/11	7/27/11	7/27/11		0	Make Corrections Noted
WO0000-011311W16	7	Baseline(R3) Weekly Status Reports.pdf	WO-SCH0002	01	TURNE361	8/09/11	8/25/11			0	Make Corrections Noted
WO0000-011311W16	8	Baseline(R3) Weekly Status Reports.pdf	WO-SCH0002	01	TURNE361	9/01/11	9/20/11	9/20/11		0	Make Corrections Noted
WO0000-011311W16	9	Baseline(R3) Weekly Status Reports.pdf	WO-SCH0002	01	TURNE361	10/04/11	10/20/11	10/24/11		4	Make Corrections Noted
WO0000-011311W16	10	Baseline(R3) Weekly Status Reports.pdf	WO-SCH0002	01	TURNE361	11/04/11	11/22/11			0	Make Corrections Noted
WO0000-011311W16	11	Baseline(R3) Weekly Status Reports.pdf	WO-SCH0002	01	TURNE361	12/05/11	12/21/11	12/22/11		1	Make Corrections Noted
WO0000-011311W16	12	Baseline(R3) Weekly Status Reports.pdf	WO-SCH0002	01	TRANS450	1/06/12	1/24/12	1/25/12		1	Make Corrections Noted
WO0000-011311W21	1	May Baseline (R3) Monthly Progress Narrative		30	TURNE361					0	Make Corrections Noted
WO0000-011311W24	1	July 2011 Schedule Delay Analysis	WO-SCH0002	01	TURNE361	7/11/11	7/27/11	7/27/11		0	Make Corrections Noted
WO0000-011311W24	2	July 2011 Schedule Delay Analysis	WO-SCH0002	01	TURNE361	8/09/11	8/25/11	9/21/11		27	Make Corrections Noted
WO0000-011311W25	1	Response to CMO/PMPC Monthly Submittal Comments	WO-SCH0002	01	TURNE361					0	Closed
WO0000-011311W25	2	Response to CMO/PMPC Monthly Submittal Comments	WO-SCH0002	01	TURNE361	11/04/11	11/22/11			0	Closed
WO2012-011310W13	1	Monthly Schedule Progress Narrative	WO-SCH2012	01	TRANS450	2/01/12	2/17/12	2/21/12		4	Make Corrections Noted
WO2012-011310W13	2	Monthly Schedule Progress Narrative	WO-SCH2012	01	TRANS450	3/02/12	3/20/12	3/20/12		0	Make Corrections Noted
WO2012-011310W14	1	Monthly Schedule Status (PDF)	WO-SCH2012	01	TRANS450	2/01/12	2/17/12	2/21/12		4	Make Corrections Noted
WO2012-011310W14	2	Monthly Schedule Status (PDF)	WO-SCH2012	01	TRANS450	3/01/12	3/19/12	3/20/12		1	Make Corrections Noted
WO2012-011310W15	1	Monthly Schedule Status (P6 FILE)	WO-SCH2012	01	TRANS450	2/01/12	2/17/12	2/21/12		4	Make Corrections Noted
WO2012-011310W15	2	Monthly Schedule Status (P6 FILE)	WO-SCH2012	01	TRANS450	3/01/12	3/19/12	3/20/12		1	Make Corrections Noted
WO2012-011310W16	1	Weekly Schedule Status Reports	WO-SCH2012	01	TRANS450	2/01/12	2/17/12	2/21/12		4	Make Corrections Noted
WO2012-011310W16	2	Weekly Schedule Status Reports	WO-SCH2012	01	TRANS450	3/01/12	3/19/12	3/20/12		1	Make Corrections Noted
WO2012-011311W17	1	2012 February Design Delay Mitigation Fragnet and Narrative	WO-SCH2012	01	TRANS450	3/01/12	3/19/12	3/20/12		1	Make Corrections Noted
Spec Section 01 13 40											
TZ1010-000000A15	1	Executed Long Form Subcontract	TG0300-020	BALFO900	TURNE361	3/21/11	4/06/11	3/21/11	3/21/11	-16	For Record Only
UA0000-011340A01	1	TG04.5 Executed Contract	TG0405-049	TRINE814	TURNE361	2/17/11	3/08/11	2/28/11	2/28/11	-8	For Record Only

Project Office
175 Beale St
San Francisco, CA 94105
Phone (415) 978-5700 Fax (415) 904-8119

Submittal #	Cycle	Submittal Name	Submittal Package	From Company	To Company	Date Sent	Date Due	Date Returned	Date Sent to Sub	Days Late	Status
Spec Section 01 13 50											
TZ1010-011350A02	1	Excavation and Material Handling Plan	TG0300-110	BALFO900	TURNE361	3/24/11	4/11/11	3/25/11	3/25/11	-17	No Exceptions Taken
TZ1010-011350A02	2	Excavation and Material Handling Plan	TG0300-110	BALFO900	TURNE361	3/25/11	4/12/11	5/02/11	5/02/11	20	No Exceptions Taken
TZ1010-011350A03	1	Spill and Discharge Control Plan	TG0300-110	BALFO900	TURNE361	3/24/11	4/11/11	3/25/11	3/25/11	-17	No Exceptions Taken
TZ1010-011350A03	2	Spill and Discharge Control Plan	TG0300-110	BALFO900	TURNE361	3/25/11	4/12/11	5/02/11	5/02/11	20	No Exceptions Taken
TZ1010-011350A04	1	Noise, Dust, and Odor Abatement Plan	TG0300-192	BALFO900	TURNE361	6/23/11	7/12/11	8/29/11	8/29/11	48	Make Corrections Noted
TZ1010-011350A05	1	Decontamination Pad Location Plan	TG0300-110	BALFO900	TURNE361	3/24/11	4/11/11	3/25/11	3/25/11	-17	No Exceptions Taken
TZ1010-011350A05	2	Decontamination Pad Location Plan	TG0300-110	BALFO900	TURNE361	3/25/11	4/12/11	5/02/11	5/02/11	20	No Exceptions Taken
TZ1010-011350A06	1	Decontamination Procedures	TG0300-110	BALFO900	TURNE361	3/24/11	4/11/11	3/25/11	3/25/11	-17	No Exceptions Taken
TZ1010-011350A06	2	Decontamination Procedures	TG0300-110	BALFO900	TURNE361	3/25/11	4/12/11	5/02/11	5/02/11	20	No Exceptions Taken
WO0000-011350W01	1	Hazardous Material Management		30	TURNE361	1/10/11	1/26/11	1/11/11		-15	Rejected
WO0000-011350W01	2	Hazardous Material Management		30	TURNE361	1/11/11	1/27/11	1/12/11		-15	Rejected
WO0000-011350W01	3	Hazardous Material Management		30	TURNE361	1/12/11	1/28/11	1/27/11	1/27/11	-1	Rejected
WO0000-011350W02	1	Hazardous Material Management Plan	WO-HAZ0001	30	TURNE361	3/11/11	3/29/11	3/29/11	3/29/11	0	No Exceptions Taken
Spec Section 01 14 00											
TA0000-011400A01	1	Transworld Quality Control Plan	TG1901-021	TRANS500	TURNE361	2/11/11	3/02/11	3/10/11	3/11/11	8	Make Corrections Noted
TA0000-011400A01	2	Transworld Quality Control Plan	TG1901-021	TRANS500	TURNE361	4/18/11	5/04/11	5/02/11	5/04/11	-2	Make Corrections Noted
TZ1020-011400A01	1	Quality Control Plan	TG0300-120	BALFO900	TURNE361	4/07/11	4/25/11	5/12/11	5/13/11	17	For Record Only
TZ1020-011400A01	2	Quality Control Plan	TG0300-120	BALFO900	TURNE361	6/08/11	6/24/11	7/13/11	7/13/11	19	For Record Only
Spec Section 01 15 40											
TZ1030-011540A02	1	BBI Preconstruction Survey Photos & Video - Zones 1-4	TG0300-701	BALFO900	TURNE361	11/30/11	12/16/11	12/16/11		0	For Record Only
UG1020-011540C01	1	M Squared - Preconstruction Survey	TG0401-012	MSQUA902	TURNE361	3/10/11	3/25/11	3/10/11	3/10/11	-15	Void
UG1020-020100A01	1	Preconstruction Survey	TG0405-019	TRINE814	TURNE361	2/03/11	2/22/11	2/16/11	2/16/11	-6	No Exceptions Taken
Spec Section 01 15 45											
TZ1010-011545A01	1	MSDS Info	TG0300-150	BALFO900	TURNE361	3/10/11	3/28/11	3/22/11	3/22/11	-6	Make Corrections Noted
TZ1010-011545A01	2	MSDS Info	TG0300-150	BALFO900	TURNE361	4/28/11	5/16/11	5/05/11	5/09/11	-11	Make Corrections Noted
TZ1010-011545A02	1	Site Health and Safety Plan	TG0300-111	BALFO900	TURNE361	3/23/11	4/08/11	3/29/11	3/25/11	-10	For Record Only
TZ1010-011545A02	2	Site Health and Safety Plan	TG0300-111	BALFO900	TURNE361	4/06/11	4/22/11	4/07/11	4/07/11	-15	For Record Only
UA0000-011545B03	1	M Squared - MSDS	TG0434-029	MSQUA902	TURNE361	1/27/11	2/14/11	1/31/11	1/31/11	-14	No Exceptions Taken
Spec Section 01 15 61											

Project Office
175 Beale St
San Francisco, CA 94105
Phone (415) 978-5700 Fax (415) 904-8119

Submittal #	Cycle	Submittal Name	Submittal Package	From Company	To Company	Date Sent	Date Due	Date Returned	Date Sent to Sub	Days Late	Status
Spec Section 01 15 61 (continued)											
TZ1010-011561A01	1	Erosion and Sediment Control Plan	TG0300-160	BALFO900	TURNE361	3/11/11	3/29/11	4/05/11	4/05/11	7	For Record Only
TZ1010-011561A01	2	Erosion and Sediment Control Plan	TG0300-160	BALFO900	TURNE361	4/07/11	4/25/11	4/29/11	5/02/11	4	For Record Only
TZ1010-011561A01	3	Erosion and Sediment Control Plan	TG0300-160	BALFO900	TURNE361	10/24/11	11/09/11	11/10/11	11/11/11	1	For Record Only
TZ1010-011561A01	4	Erosion and Sediment Control Plan	TG0300-160	BALFO900	TURNE361	11/18/11	12/08/11	12/16/11	12/16/11	8	For Record Only
WO0000-011561W01	1	Spill Discharge and Control Plan	WO-SWP0001	30	TURNE361	1/10/11	1/26/11	1/11/11		-15	Make Corrections Noted
WO0000-011561W01	2	Spill Discharge and Control Plan	WO-SWP0001	30	TURNE361	1/11/11	1/27/11	1/12/11		-15	Make Corrections Noted
WO0000-011561W01	3	Spill Discharge and Control Plan	WO-SWP0001	30	TURNE361	1/12/11	1/28/11	1/21/11	1/24/11	-7	Make Corrections Noted
WO0000-011561W01	4	Spill Discharge and Control Plan	WO-SWP0001	30	TURNE361	2/25/11	3/15/11	3/29/11	3/29/11	14	Make Corrections Noted
Spec Section 01 15 70											
TA2010-321217A04	1	Temporary Lighting Plan	TG0300-660	BALFO900	TURNE361	8/31/11	9/19/11	9/28/11	9/28/11	9	Make Corrections Noted
TZ1030-011570A01	1	Traffic Control Plans	TG0300-170	BALFO900	TURNE361	4/08/11	4/26/11	4/28/11	4/28/11	2	No Exceptions Taken
TZ1030-011570A02	1	Parking and Storage Plans	TG0300-170	BALFO900	TURNE361	4/08/11	4/26/11	4/28/11	4/28/11	2	No Exceptions Taken
TZ1030-011570A02	2	Parking and Storage Plans	TG0300-170	BALFO900	TURNE361	8/02/11	8/18/11	8/02/11	8/02/11	-16	No Exceptions Taken
TZ1030-011570A03	1	Flag Persons Certification	TG0300-170	BALFO900	TURNE361	4/08/11	4/26/11	4/28/11	4/28/11	2	No Exceptions Taken
TZ1030-011570A04	1	Material Specificationss for Traffic Control Devices	TG0300-170	BALFO900	TURNE361	4/08/11	4/26/11	4/28/11	4/28/11	2	No Exceptions Taken
TZ1030-011570A05	1	Traffic Control Plans - PG&E Phase II Utilities on First Street	TG0300-171	SANDI612	SANDI612	10/21/11	11/08/11	10/21/11	10/21/11	-18	No Exceptions Taken
TZ1030-011570A05	2	Traffic Control Plans - PG&E Phase II Utilities on First Street	TG0300-171	SANDI612	SANDI612	11/09/11	11/29/11	12/01/11	12/01/11	2	No Exceptions Taken
TZ1030-011570A05	3	Traffic Control Plans - PG&E Phase II Utilities on First Street	TG0300-171	SANDI612	TURNE361	12/01/11	12/19/11	12/30/11	12/30/11	11	No Exceptions Taken
TZ1030-011570A06	1	Traffic Control Plans - First Street - Partial and Full Closure, Detours, Final Striping and Signage Configuration	TG0300-172	BALFO900	SANDI612	12/08/11	12/28/11	12/27/11	12/27/11	-1	Submitted
TZ1030-011570A06	2	Traffic Control Plans - First Street - Partial and Full Closure, Detours, Final Striping and Signage Configuration	TG0300-172	BALFO900	TURNE361	3/16/12	4/03/12			0	Submitted
TZ1030-011570A07	1	Traffic Control Plans - Fremont Street - Partial and Full Closure, Detours, Final Striping and Signage Configuration	TG0300-173	BALFO900	SANDI612	12/08/11	12/28/11	12/27/11	12/27/11	-1	Submitted
TZ1030-011570A07	2	Traffic Control Plans - Fremont Street - Partial and Full Closure, Detours, Final Striping and Signage Configuration	TG0300-173	BALFO900	TURNE361	3/16/12	4/03/12			0	Submitted
TZ1030-011570A08	1	Traffic Control Plans - Beale Street - Partial and Full Closure, Detours, Final Striping and Signage Configuration	TG0300-174	BALFO900	TURNE361	3/15/12	4/02/12	12/27/11	12/30/11	-97	Submitted

Project Office
175 Beale St
San Francisco, CA 94105
Phone (415) 978-5700 Fax (415) 904-8119

Submittal #	Cycle	Submittal Name	Submittal Package	From Company	To Company	Date Sent	Date Due	Date Returned	Date Sent to Sub	Days Late	Status
Spec Section 01 15 70 (continued)											
TZ1030-011570A08	2	Traffic Control Plans - Beale Street - Partial and Full Closure, Detours, Final Striping and Signage Configuration	TG0300-174	BALFO900	TURNE361	3/16/12	4/03/12			0	Submitted
TZ1030-011570A09	1	Traffic Control Plans - Natoma Street and Minna Street - Partial and Full Closure, Detours, Final Striping and Signage Configuration	TG0300-175	BALFO900	TURNE361	12/13/11	1/02/12	12/13/11	12/13/11	-20	Void
TZ1030-011570A10	1	Traffic Control Plans - Howard Street - Construction Entrance	TG0300-176	BALFO900	TURNE361	12/13/11	1/02/12	12/13/11	12/13/11	-20	Void
UA0000-011570C01	1	Traffic Control Plans Part 1	TG0401-005	MSQUA902	TURNE361	2/24/11	3/14/11	3/03/11	3/03/11	-11	No Exceptions Taken
UA0000-011570C02	1	Sign Inventory Form	TG0401-006	MSQUA902	TURNE361	3/09/11	3/25/11	3/15/11	3/15/11	-10	No Exceptions Taken
UA0000-011570C03	1	Traffic Control Plans Part 2	TG0401-010	MSQUA902	TURNE361	2/28/11	3/16/11	3/03/11	3/03/11	-13	No Exceptions Taken
UA0000-011570C04	1	Traffic Control Plans Part 3		MSQUA902	TURNE361		3/21/11			0	Void
UA0000-011570D01	1	Sign Inventory Form	TG0406-004	MSQUA902	TURNE361	5/05/11	5/23/11	5/27/11	5/31/11	4	No Exceptions Taken
UA0000-011570D02	1	Traffic Control Plans - Part 2	TG0406-007	MSQUA902	TURNE361	4/21/11	5/09/11	5/10/11	5/10/11	1	No Exceptions Taken
UA0000-011570D03	1	Traffic Control Plans - Part 1	TG0406-003	MSQUA902	TURNE361	4/04/11	4/20/11	4/19/11	4/19/11	-1	No Exceptions Taken
UA3020-011570A40	1	Traffic Control Plans for Minna St from First to Shaw	TG0405-039	TRINE814	TURNE361	1/04/11	1/20/11	1/07/11	1/07/11	-13	No Exceptions Taken
UA3020-011570A41	1	Traffic Control Plan for Minna St from Shaw to Second St	TG0405-040	TRINE814	TURNE361	1/04/11	1/20/11	1/07/11	1/07/11	-13	No Exceptions Taken
UA3020-011570A42	1	Traffic Control Plan for Minna St Joint Trench	TG0405-050	TRINE814	TURNE361	3/02/11	3/18/11	3/10/11	3/15/11	-8	No Exceptions Taken
WO0000-011570W01	1	Traffic Control Plan	WO-TCP0001	30	TURNE361	10/12/11	10/28/11	11/03/11	11/09/11	6	Submitted
WO0000-011570W01	2	Traffic Control Plan	WO-TCP0001	30	TURNE361	3/16/12	4/03/12			0	Submitted
Spec Section 01 17 20											
TZ1030-011720A01	1	Final As-built Drawings	TG0300-180	BALFO900	TURNE361		4/23/14			0	Pending
Spec Section 01 35 65											
TZ1010-013565A01	1	Air Quality Plan	TG0300-190	BALFO900	TURNE361	3/24/11	4/11/11	3/25/11	3/28/11	-17	Rejected
TZ1010-013565A01	2	Air Quality Plan	TG0300-190	BALFO900	TURNE361	4/06/11	4/22/11	4/29/11	12/16/11	7	Rejected
TZ1010-013565A01	3	Air Quality Plan	TG0300-190	BALFO900	TURNE361		4/13/11			0	Rejected
TZ1010-013565A01	4	Air Quality Plan	TG0300-190	BALFO900	TURNE361	3/01/12	3/19/12	3/01/12		-18	Rejected
TZ1010-013565A01	5	Air Quality Plan	TG0300-190	BALFO900	TURNE361	3/01/12	3/19/12	3/06/12	3/06/12	-13	Rejected
TZ1030-013565A02	1	Vibration and Noise Monitoring and Response Plan	TG0300-190	BALFO900	TURNE361	3/24/11	4/11/11	3/25/11	3/28/11	-17	For Record Only
TZ1030-013565A02	2	Vibration and Noise Monitoring and Response Plan	TG0300-190	BALFO900	TURNE361	4/06/11	4/22/11	4/29/11	12/16/11	7	For Record Only
TZ1030-013565A03	1	Life Safety and Emergency Access Plan	TG0300-191	BALFO900	TURNE361	5/09/11	5/25/11	6/17/11	6/20/11	23	Revise and Resubmit
TZ1030-013565A03	2	Life Safety and Emergency Access Plan	TG0300-191	BALFO900	TURNE361	6/23/11	7/12/11	8/22/11	8/23/11	41	Revise and Resubmit

Project Office
175 Beale St
San Francisco, CA 94105
Phone (415) 978-5700 Fax (415) 904-8119

Submittal #	Cycle	Submittal Name	Submittal Package	From Company	To Company	Date Sent	Date Due	Date Returned	Date Sent to Sub	Days Late	Status
Spec Section 01 35 65 (continued)											
TZ1030-013565A03	3	Life Safety and Emergency Access Plan	TG0300-191	BALFO900	TURNE361	2/06/12	2/22/12			0	Revise and Resubmit
TZ1030-013565A03	4	Life Safety and Emergency Access Plan	TG0300-191	BALFO900	TURNE361		5/03/11	3/02/12	3/06/12	304	Revise and Resubmit
TZ1030-013565A04	1	Acknowledgement that BBII will Coordinate with TJPA on Historic Preservation, etc.	TG0300-190	BALFO900	TURNE361	3/24/11	4/11/11	3/25/11	3/28/11	-17	Make Corrections Noted
TZ1030-013565A04	2	Acknowledgement that BBII will Coordinate with TJPA on Historic Preservation, etc.	TG0300-190	BALFO900	TURNE361	4/06/11	4/22/11	4/29/11	5/02/11	7	Make Corrections Noted
Spec Section 01 53 13											
TG4010-015313A01	1	CR T-017R1 PG&E Phase II Work at First Street	TG0300-901	BALFO900	TURNE361	10/14/11	11/01/11	1/06/12	10/24/11	66	Make Corrections Noted
TZ1030-015313A02	1	Temporary Bridges - Qualifications Data	TG0300-200	BALFO900	TURNE361	2/15/11	3/04/11	2/23/11	2/23/11	-9	For Record Only
TZ1030-015313A03	1	Temporary Bridges - Welder AWS Certifications	TG0300-240	BALFO900	TURNE361		6/04/12			0	Pending
TZ1030-015313A04	1	Temporary Bridges - Product Data	TG0300-210	BALFO900	TURNE361	8/10/11	8/26/11	8/30/11	9/12/11	4	Revise and Resubmit
TZ1030-015313A05	1	Temporary Bridges - Concrete Mix Designs	TG0300-248	BALFO900	TURNE361	1/09/12	1/25/12	2/09/12	2/09/12	15	For Record Only
TZ1030-015313A05	2	Temporary Bridges - Concrete Mix Designs	TG0300-248	BALFO900	TURNE361	3/13/12	3/29/12	3/05/12	3/05/12	-24	For Record Only
TZ1030-015313A06	1	Temporary Bridges - Rebar Manufacturer Certificates	TG0300-250	BALFO900	TURNE361		6/18/12			0	Pending
TZ1030-015313A07	1	Temporary Bridges - Misc. Materials Required for Complete Installation (ie Signage, Lighting, OCS System, Etc.)	TG0300-215	BALFO900	TURNE361	3/22/12	4/09/12	3/22/12	3/22/12	-18	Void
TZ1030-015313A08	1	Temp Bridge Geometrics - First Street	TG0300-205	BALFO900	TURNE361	2/14/12	3/01/12	2/16/12	2/16/12	-14	Submitted
TZ1030-015313A08	2	Temp Bridge Geometrics - First Street	TG0300-205	BALFO900	TURNE361	2/22/12	3/09/12	3/06/12	3/06/12	-3	Submitted
TZ1030-015313A08	3	Temp Bridge Geometrics - First Street	TG0300-205	BALFO900	TURNE361	3/15/12	4/02/12			0	Submitted
TZ1030-015313A09	1	Structural Drawings - First Street and Fremont Street	TG0300-201	BALFO900	TURNE361	7/11/11	7/27/11	8/11/11	8/11/11	15	Submitted
TZ1030-015313A09	2	Structural Drawings - First Street and Fremont Street	TG0300-201	BALFO900	TURNE361	10/21/11	11/08/11	11/14/11	11/14/11	6	Submitted
TZ1030-015313A09	3	Structural Drawings - First Street and Fremont Street	TG0300-201	BALFO900	TURNE361	2/24/12	3/13/12			0	Submitted
TZ1030-015313A10	1	Structural Calculations - First Street and Fremont Street	TG0300-201	BALFO900	TURNE361	7/11/11	7/27/11	8/11/11	8/11/11	15	Submitted
TZ1030-015313A10	2	Structural Calculations - First Street and Fremont Street	TG0300-201	BALFO900	TURNE361	10/21/11	11/08/11	11/14/11	11/14/11	6	Submitted
TZ1030-015313A10	3	Structural Calculations - First Street and Fremont Street	TG0300-201	BALFO900	TURNE361	2/24/12	3/13/12			0	Submitted
TZ1030-015313A11	1	Preconstruction Photos of Existing Conditions BEALE ST	TG0300-268	BALFO900	TURNE361		6/18/12			0	Pending
TZ1030-015313A12	1	MUNI OCS Installation Plan BEALE ST [FOR RECORD ONLY]	TG0300-220	BALFO900	TURNE361	6/28/11	7/15/11	8/16/11	8/16/11	32	For Record Only
TZ1030-015313A13	1	Temporary Bridge - Peer Review Letter	TG0300-202	BALFO900	TURNE361	8/10/11	8/26/11	9/20/11	9/20/11	25	Submitted
TZ1030-015313A13	2	Temporary Bridge - Peer Review Letter	TG0300-202	BALFO900	TURNE361	10/21/11	11/08/11	11/10/11	11/11/11	2	Submitted

Project Office
175 Beale St
San Francisco, CA 94105
Phone (415) 978-5700 Fax (415) 904-8119

Submittal #	Cycle	Submittal Name	Submittal Package	From Company	To Company	Date Sent	Date Due	Date Returned	Date Sent to Sub	Days Late	Status
Spec Section 01 53 13 (continued)											
TZ1030-015313A13	3	Temporary Bridge - Peer Review Letter	TG0300-202	BALFO900	TURNE361	2/24/12	3/13/12			0	Submitted
TZ1030-015313A14	1	Utility Supports at Temporary Bridges	TG0300-203	BALFO900	TURNE361	9/21/11	10/07/11	10/14/11	10/14/11	7	Revise and Resubmit
TZ1030-015313A15	1	Temporary Bridge Traffic & Signal Plans - 1st and Fremont	TG0300-204	BALFO900	TURNE361	9/15/11	10/03/11	10/06/11	10/11/11	3	Revise and Resubmit
TZ1030-015313A15	2	Temporary Bridge Traffic & Signal Plans - 1st and Fremont	TG0300-204	BALFO900	SANDI612	11/28/11	12/14/11	11/28/11	12/27/11	-16	Revise and Resubmit
TZ1030-015313A15	3	Temporary Bridge Traffic & Signal Plans - 1st and Fremont	TG0300-204	BALFO900	SANDI612	1/24/12	2/09/12	1/25/12	1/25/12	-15	Revise and Resubmit
TZ1030-015313A15	4	Temporary Bridge Traffic & Signal Plans - 1st and Fremont	TG0300-204	BALFO900	TURNE361	1/25/12	2/10/12	3/05/12	3/06/12	24	Revise and Resubmit
TZ1030-015313A16	1	Preconstruction Photos of Existing Conditions FIRST ST	TG0300-260	BALFO900	TURNE361		6/18/12			0	Pending
TZ1030-015313A17	1	MUNI OCS Installation Plan FIRST ST	TG0300-230	BALFO900	TURNE361		3/14/12			0	Pending
TZ1030-015313A18	1	Temporary Bridge Design Memos	TG0300-201	BALFO900	TURNE361	10/21/11	11/08/11	11/14/11	11/14/11	6	Not Used
TZ1030-015313A21	1	Preconstruction Photos of Existing Conditions FREMONT ST	TG0300-264	BALFO900	TURNE361		6/18/12			0	Pending
TZ1030-015313A22	1	Shop Drawings ACCESS TRESTLE	TG0300-280	BALFO900	TURNE361	8/16/11	9/01/11	8/23/11		-9	Approved As Noted
TZ1030-015313A22	2	Shop Drawings ACCESS TRESTLE	TG0300-280	BALFO900	TURNE361	8/19/11	9/07/11	9/27/11	9/27/11	20	Approved As Noted
TZ1030-015313A22	3	Shop Drawings ACCESS TRESTLE	TG0300-280	BALFO900	TURNE361	12/16/11	1/05/12			0	Approved As Noted
TZ1030-015313A22	4	Shop Drawings ACCESS TRESTLE	TG0300-280	BALFO900	TURNE361	1/06/12	1/24/12			0	Approved As Noted
TZ1030-015313A22	5	Shop Drawings ACCESS TRESTLE	TG0300-280	BALFO900	TURNE361	1/06/12	1/24/12		3/15/12	0	Approved As Noted
TZ1030-015313A23	1	Structural Calculations ACCESS TRESTLE	TG0300-280	BALFO900	TURNE361	8/16/11	9/01/11	8/23/11		-9	Approved As Noted
TZ1030-015313A23	2	Structural Calculations ACCESS TRESTLE	TG0300-280	BALFO900	TURNE361	8/19/11	9/07/11	9/27/11	9/27/11	20	Approved As Noted
TZ1030-015313A23	3	Structural Calculations ACCESS TRESTLE	TG0300-280	BALFO900	TURNE361	12/16/11	1/05/12			0	Approved As Noted
TZ1030-015313A23	4	Structural Calculations ACCESS TRESTLE	TG0300-280	BALFO900	TURNE361	1/06/12	1/24/12			0	Approved As Noted
TZ1030-015313A23	5	Structural Calculations ACCESS TRESTLE	TG0300-280	BALFO900	TURNE361	1/06/12	1/24/12		3/15/12	0	Approved As Noted
TZ1030-015313A24	1	Preconstruction Photos of Existing Conditions ACCESS TRESTLE	TG0300-290	BALFO900	TURNE361	1/11/12	1/27/12	1/30/12	1/31/12	3	No Exceptions Taken
TZ1030-015313A25	1	Access Trestle Design Criteria Document	TG0300-280	BALFO900	TURNE361		8/17/11	8/23/11		6	Not Used
TZ1030-015313A25	2	Access Trestle Design Criteria Document	TG0300-280	BALFO900	TURNE361	1/06/12	1/24/12	9/27/11	9/27/11	-119	Not Used
TZ1030-015313A26	1	Access Trestle Peer Review Letter and Comment History	TG0300-280	BALFO900	TURNE361		8/17/11	8/23/11		6	Approved As Noted
TZ1030-015313A26	2	Access Trestle Peer Review Letter and Comment History	TG0300-280	BALFO900	TURNE361	12/30/11	1/17/12	9/27/11	9/27/11	-112	Approved As Noted
TZ1030-015313A26	3	Access Trestle Peer Review Letter and Comment History	TG0300-280	BALFO900	TURNE361	12/30/11	1/17/12			0	Approved As Noted
TZ1030-015313A26	4	Access Trestle Peer Review Letter and Comment History	TG0300-280	BALFO900	TURNE361	1/06/12	1/24/12			0	Approved As Noted

Project Office
175 Beale St
San Francisco, CA 94105
Phone (415) 978-5700 Fax (415) 904-8119

Submittal #	Cycle	Submittal Name	Submittal Package	From Company	To Company	Date Sent	Date Due	Date Returned	Date Sent to Sub	Days Late	Status
Spec Section 01 53 13 (continued)											
TZ1030-015313A26	5	Access Trestle Peer Review Letter and Comment History	TG0300-280	BALFO900	TURNE361	1/06/12	1/24/12		3/15/12	0	Approved As Noted
TZ1030-015313A27	1	CLSM Mix for pin pile and trestle pile installation	TG0300-281	BALFO900	TURNE361	1/26/12	2/13/12	2/09/12	2/09/12	-4	Revise and Resubmit
TZ1030-015313A30	1	Temporary Bridges - Steel Manufacturer Certifications or Coupon Tests	TG0300-244	BALFO900	TURNE361		6/04/12			0	Pending
Spec Section 01 74 00											
UA3020-017400A39	1	Constr & Demo Debris Mngmt Plan	TG0405-044	TRINE814	TURNE361	1/20/11	2/07/11	1/26/11	1/26/11	-12	Not Reviewed
Spec Section 01 81 13											
TZ1010-018113A01	1	LEED Submittal - Drilled Shafts (DUPLICATE - TA1020-316329A05)	TG0300-080	BALFO900	TURNE361	6/13/11	6/29/11	6/28/11	6/28/11	-1	No Exceptions Taken
TZ1010-018113A02	1	LEED Submittal - Structural Steel (DUPLICATE - TA2010-051201A07.1)	TG0300-081	BALFO900	TURNE361	6/13/11	6/29/11	6/29/11	6/30/11	0	No Exceptions Taken
WO0000-018113W01	1	LEED Action Plan	WO-LED0001	01	TURNE361	3/13/12	3/29/12	3/12/12		-17	Submitted
WO0000-018113W01	2	LEED Action Plan	WO-LED0001	01	TURNE361	3/20/12	4/05/12			0	Submitted
Spec Section 011026											
UA0000011026A01	1	Trinet schedule of values (SOV)	TG0405-031	TRINE814	TURNE361	11/19/10	12/07/10	12/01/10	12/01/10	-6	No Exceptions Taken
UA0000011026A01	2	Trinet schedule of values (SOV)	TG0405-031	TRINE814	TURNE361	12/01/10	12/17/10	12/10/10	12/10/10	-7	No Exceptions Taken
UA0000-011026B02	1	Schedule of Values TG04.4	TG0434-012	MSQUA902	TURNE361	1/17/11	2/02/11	1/24/11	1/24/11	-9	No Exceptions Taken
UA0000-011026B02	2	Schedule of Values TG04.4	TG0434-012	MSQUA902	TURNE361	1/25/11	2/10/11	1/27/11		-14	No Exceptions Taken
UA0000-011026B02	3	Schedule of Values TG04.4	TG0434-012	MSQUA902	TURNE361	1/27/11	2/14/11	2/01/11	2/02/11	-13	No Exceptions Taken
Spec Section 011050											
UA0000-011050E01	1	M Squared - Survey and Control Points	TG0402-021	MSQUA902	TURNE361	10/24/11	11/09/11	10/31/11	12/21/11	-9	No Exceptions Taken
Spec Section 011300											
UA0000-011300B01	1	Submittal Schedule	TG0434-001	MSQUA902	TURNE361	12/16/10	1/19/11	12/21/10	1/04/11	-29	Revise and Resubmit
UA0000-011300B02	1	4.6 Submittal Schedule	TG0406-011	MSQUA902	TURNE361	3/30/11	4/15/11	5/11/11	5/11/11	26	Make Corrections Noted
UA0000-011300D01	1	Submittal Schedule	TG0402-017	MSQUA902	TURNE361	8/03/11	8/19/11	10/12/11	10/12/11	54	No Exceptions Taken
Spec Section 011310											
TA0000-011310A01	1	Transworld Schedule Narrative	TG1901-008	30	TURNE361	12/08/10	12/28/10	12/27/10	1/03/11	-1	No Exceptions Taken
TA0000-011310A01	2	Transworld Schedule Narrative	TG1901-008	30	TURNE361	1/12/11	1/28/11	2/02/11	2/07/11	5	No Exceptions Taken
TA0000-011310A02	1	Transworld Schedule in PDF	TG1901-008	30	TURNE361	12/08/10	12/28/10	12/27/10	1/03/11	-1	No Exceptions Taken
TA0000-011310A02	2	Transworld Schedule in PDF	TG1901-008	30	TURNE361	1/12/11	1/28/11	2/02/11	2/07/11	5	No Exceptions Taken
TA0000-011310A03	1	Transworld Schedule in P6	TG1901-008	30	TURNE361	12/08/10	12/28/10	12/27/10	1/03/11	-1	No Exceptions Taken
TA0000-011310A03	2	Transworld Schedule in P6	TG1901-008	30	TURNE361	1/12/11	1/28/11	2/02/11	2/07/11	5	No Exceptions Taken

Project Office
175 Beale St
San Francisco, CA 94105
Phone (415) 978-5700 Fax (415) 904-8119

Submittal #	Cycle	Submittal Name	Submittal Package	From Company	To Company	Date Sent	Date Due	Date Returned	Date Sent to Sub	Days Late	Status
Spec Section 011311											
WO0000-011311W17	1	2011-03-10 - CONSTRUCTION SCHEDULE SUBMITTAL TG 04.1 (R1)	WO-SCH0002	30	TURNE361	4/04/11	4/20/11	4/26/11	4/26/11	6	Make Corrections Noted
WO0000-011311W18	1	2011-03-10 - CONSTRUCTION SCHEDULE SUBMITTAL TG 04.3/TG04.4 (R1)	WO-SCH0002	30	TURNE361	4/04/11	4/20/11	4/26/11	4/26/11	6	Make Corrections Noted
WO0000-011311W19	1	COMPARISON REPORT	WO-SCH0002	01	TURNE361					0	Make Corrections Noted
WO0000-011311W19	2	COMPARISON REPORT	WO-SCH0002	01	TURNE361	4/28/11	5/16/11	5/25/11	5/31/11	9	Make Corrections Noted
WO0000-011311W19	3	COMPARISON REPORT	WO-SCH0002	01	TURNE361	6/01/11	6/17/11	6/20/11	6/21/11	3	Make Corrections Noted
WO0000-011311W19	4	COMPARISON REPORT	WO-SCH0002	01	TURNE361	7/11/11	7/27/11	7/27/11		0	Make Corrections Noted
WO0000-011311W19	5	COMPARISON REPORT	WO-SCH0002	01	TURNE361	8/09/11	8/25/11	9/21/11		27	Make Corrections Noted
WO0000-011311W20	1	CD DESIGN SCHEDULE ANALYSIS	WO-SCH0002	30	TURNE361					0	Make Corrections Noted
WO0000-011311W20	2	CD DESIGN SCHEDULE ANALYSIS	WO-SCH0002	30	TURNE361	4/28/11	5/16/11	5/25/11	5/31/11	9	Make Corrections Noted
WO0000-011311W20	3	CD DESIGN SCHEDULE ANALYSIS	WO-SCH0002	30	TURNE361	6/01/11	6/17/11	6/20/11	6/21/11	3	Make Corrections Noted
WO0000-011311W22	1	ISSUES LOG	WO-SCH0002	01	TURNE361					0	Make Corrections Noted
WO0000-011311W22	2	ISSUES LOG	WO-SCH0002	01	TURNE361	7/11/11	7/27/11	7/27/11		0	Make Corrections Noted
WO0000-011311W22	3	ISSUES LOG	WO-SCH0002	01	TURNE361	8/09/11	8/25/11	9/21/11		27	Make Corrections Noted
WO0000-011311W23	1	WEEKLY COMPARISON REPORTS (PREVIOUSLY ISSUED BY EMAIL)	WO-SCH0002	01	TURNE361					0	Make Corrections Noted
WO0000-011311W23	2	WEEKLY COMPARISON REPORTS (PREVIOUSLY ISSUED BY EMAIL)	WO-SCH0002	01	TURNE361	7/11/11	7/27/11	7/27/11		0	Make Corrections Noted
WO0000-011311W23	3	WEEKLY COMPARISON REPORTS (PREVIOUSLY ISSUED BY EMAIL)	WO-SCH0002	01	TURNE361	8/09/11	8/25/11	9/21/11		27	Make Corrections Noted
Spec Section 011340											
UA0000-011340B01	1	Executed Contract	TG0434-011	MSQUA902	TURNE361	1/20/11	1/20/11	1/31/11	1/31/11	11	For Record Only
UA0000-011340C01	1	Bass - TG05.2R Subcontract JV Authorization EXECUTED	TG0502-000	01	TURNE361	9/15/11	10/03/11			0	For Record Only
UA0000-011340C02	1	Trasworld Executed Subcontract	TG1901-000	01	TURNE361	9/15/11	10/03/11	9/16/11		-17	For Record Only
Spec Section 011400											
UA0000-011400A01	1	Trinet Quality Control Plan	TG0405-011	TRINE814	TURNE361	11/04/10	11/22/10	11/18/10		-4	For Record Only
UA0000-011400A01	2	Trinet Quality Control Plan	TG0405-011	TRINE814	TURNE361	3/25/11	4/12/11	4/05/11		-7	For Record Only
UA0000-011400A01	3	Trinet Quality Control Plan	TG0405-011	TRINE814	TURNE361	4/18/11	5/04/11	4/28/11	5/02/11	-6	For Record Only
UA0000-011400A01	4	Trinet Quality Control Plan	TG0405-011	TRINE814	TURNE361	6/09/11	6/27/11	6/09/11	6/09/11	-18	For Record Only

Project Office
175 Beale St
San Francisco, CA 94105
Phone (415) 978-5700 Fax (415) 904-8119

Submittal #	Cycle	Submittal Name	Submittal Package	From Company	To Company	Date Sent	Date Due	Date Returned	Date Sent to Sub	Days Late	Status
Spec Section 011400 (continued)											
UA0000-011400A01	5	Trinet Quality Control Plan	TG0405-011	TRINE814	TURNE361	7/19/11	8/04/11	8/31/11	8/31/11	27	For Record Only
UA0000-011400B01	1	CQC Plan	TG0434-015	MSQUA902	TURNE361	2/07/11	2/24/11	3/11/11	3/11/11	15	No Exceptions Taken
UA0000-011400B01	2	CQC Plan	TG0434-015	MSQUA902	TURNE361	6/06/11	6/22/11	7/13/11	7/13/11	21	No Exceptions Taken
UA0000-011400B01	3	CQC Plan	TG0434-015	MSQUA902	TURNE361	8/05/11	8/23/11	8/12/11	8/12/11	-11	No Exceptions Taken
UA0000-011400D01	1	AWSS CQC Plan	TG0402-018	MSQUA902	TURNE361	11/18/11	12/08/11	1/18/12	1/18/12	41	Revise and Resubmit
WO0000-011400W01	1	Webcor / Obayashi Contractor Quality Control Plan	WO-CQC0001	30	TURNE361	10/07/10	10/25/10	10/29/10	11/03/10	4	For Record Only
WO0000-011400W01	2	Webcor / Obayashi Contractor Quality Control Plan	WO-CQC0001	30	TURNE361	11/03/10	11/19/10	11/19/10	11/19/10	0	For Record Only
WO0000-011400W01	3	Webcor / Obayashi Contractor Quality Control Plan	WO-CQC0001	30	TURNE361	1/04/11	1/20/11	1/14/11	1/14/11	-6	For Record Only
WO0000-011400W01	4	Webcor / Obayashi Contractor Quality Control Plan	WO-CQC0001	30	TURNE361	3/09/11	3/25/11	3/22/11	3/29/11	-3	For Record Only
WO0000-011400W01	5	Webcor / Obayashi Contractor Quality Control Plan	WO-CQC0001	30	TURNE361	12/09/11	12/29/11	2/09/12	12/09/11	42	For Record Only
Spec Section 011545											
TA0000-011545A01	1	HASP and IIPP	TG1901-020	TRANS500	TURNE361	1/11/11	1/27/11	1/25/11	2/11/11	-2	Not Reviewed
TA0000-011545A02	1	Health & Safety Form	TG1901-020	TRANS500	TURNE361	1/11/11	1/27/11	1/25/11	2/11/11	-2	Not Reviewed
UA0000-011545A20	1	Injury Illness Prevention Plan (IIPP)	TG0405-003	TRINE814	TURNE361	10/26/10	11/11/10	11/18/10	11/18/10	7	No Exceptions Taken
UA0000-011545A21	1	Employee Code of Safe Practices	TG0405-003	TRINE814	TURNE361	10/26/10	11/11/10	11/18/10	11/18/10	7	No Exceptions Taken
UA0000-011545A22	1	MSDS	TG0405-003	TRINE814	TURNE361	10/26/10	11/11/10	11/18/10	11/18/10	7	No Exceptions Taken
UA0000-011545B01	1	HASP	TG0434-016	MSQUA902	TURNE361	1/12/11	1/28/11	1/26/11		-2	For Record Only
UA0000-011545B01	2	HASP	TG0434-016	MSQUA902	TURNE361	4/04/11	4/20/11	4/07/11	4/08/11	-13	For Record Only
UA0000-011545B02	1	Health & Safety Criteria Form	TG0434-016	MSQUA902	TURNE361	1/12/11	1/28/11	1/26/11	1/26/11	-2	Not Reviewed
WO0000-011545W01	1	Webcor / Obayashi Health & Safety Plan	WO-SAF0001	30	TURNE361	10/18/10	11/03/10	11/17/10	11/18/10	14	Make Corrections Noted
WO0000-011545W01	2	Webcor / Obayashi Health & Safety Plan	WO-SAF0001	30	TURNE361	1/10/11	1/26/11	1/26/11	1/27/11	0	Make Corrections Noted
Spec Section 011561											
UA0000-011561A29	1	Trinet SWPPP	TG0405-15	TRINE814	TURNE361	1/13/11	1/31/11	1/12/11		-19	Not Reviewed
UA0000-011561A29	2	Trinet SWPPP	TG0405-15	TRINE814	TURNE361	1/12/11	1/28/11	5/09/11	3/15/11	101	Not Reviewed
UA0000-011561B01	1	SWPPP	TG0434-017	MSQUA902	TURNE361	1/12/11	1/28/11	1/31/11	1/31/11	3	Not Reviewed
Spec Section 011570											
UA0000-011570A01	1	Traffic Control Plan on Minna Sewer Plan	TG0405-022	TRINE814	TURNE361	11/17/10	12/03/10	12/08/10	12/08/10	5	No Exceptions Taken
UA0000-011570A02	1	Sign Inventory Form	TG0405-027	TRINE814	TURNE361	11/16/10	12/02/10	11/29/10	11/29/10	-3	No Exceptions Taken

Project Office
175 Beale St
San Francisco, CA 94105
Phone (415) 978-5700 Fax (415) 904-8119

Submittal #	Cycle	Submittal Name	Submittal Package	From Company	To Company	Date Sent	Date Due	Date Returned	Date Sent to Sub	Days Late	Status
Spec Section 011570 (continued)											
UA0000-011570A03	1	Traffic Plans for Utility Work on 1st Street	TG0405-008	TRINE814	TURNE361	11/01/10	11/17/10	11/18/10	11/18/10	1	Make Corrections Noted
UA0000-011570A16	1	Trinet - Traffic Control Materials	TG0405-002	TRINE814	TURNE361	10/26/10	11/09/10	11/18/10	11/18/10	9	No Exceptions Taken
UA0000-011570A17	1	Trinet - Traffic Control For Potholing on Minna Street	TG0405-002	TRINE814	TURNE361	10/26/10	11/09/10	11/18/10	11/18/10	9	No Exceptions Taken
UA0000-011570A18	1	Trinet - Traffic Control for Street Light Relocation Work	TG0405-002	TRINE814	TURNE361	10/26/10	11/09/10	11/18/10	11/18/10	9	No Exceptions Taken
UA0000-011570A19	1	Trinet - Traffic Storage and Parking Plan	TG0405-002	TRINE814	TURNE361	10/26/10	11/09/10	11/18/10	11/18/10	9	No Exceptions Taken
UA0000-011570A26	1	Traffic Plans for Utility Work on Fremont St.	TG0405-012	TRINE814	TURNE361	11/10/10	11/26/10	11/18/10	11/18/10	-8	No Exceptions Taken
UA0000-011570A28	1	Traffic Plans for Shaw Alley	TG0405-033	TRINE814	TURNE361	11/23/10	12/09/10	11/29/10	11/29/10	-10	No Exceptions Taken
UA0000-011570A37	1	Trinet - Traffic Plans for Joint Trench on 2nd St	TG0405-035	TRINE814	TURNE361	1/03/11	1/19/11	12/28/10		-22	No Exceptions Taken
UA0000-011570A37	2	Trinet - Traffic Plans for Joint Trench on 2nd St	TG0405-035	TRINE814	TURNE361	1/06/11	1/10/11	1/13/11	1/13/11	3	No Exceptions Taken
UA0000-011570B02	1	Flagger Certificates	TG0434-019	MSQUA902	TURNE361	12/20/10	1/21/11	1/05/11	1/05/11	-16	No Exceptions Taken
UA0000-011570B03	1	Traffic Control Plans	TG0434-019	MSQUA902	TURNE361	12/20/10	1/21/11	1/05/11	1/05/11	-16	No Exceptions Taken
UA0000-011570B04	1	Sign Inventory Form	TG0434-021	MSQUA902	TURNE361	12/20/10	1/21/11	1/05/11	1/05/11	-16	No Exceptions Taken
UA0000-011570B05	1	Traffic Control Plan	TG0434-026	MSQUA902	TURNE361	1/04/11	1/20/11	1/07/11	1/07/11	-13	Approved As Noted
UA0000-011570B06	1	Traffic Control Plan	TG0434-027	MSQUA902	TURNE361	2/15/12	1/04/11	2/15/12	2/15/12	407	Closed
UA0000-011570D04	1	AWSS Sign Inventory Form	TG0402-019	MSQUA902	TURNE361	11/18/11	12/08/11	12/30/11	12/30/11	22	No Exceptions Taken
Spec Section 017400											
UA0000-017400B01	1	C&D Management Plan	TG0434-018	MSQUA902	TURNE361	1/17/11	2/02/11	1/26/11	1/26/11	-7	Not Reviewed
Spec Section 018113											
WO0000-018113W02	1	LEED Progress Report Q1	WO-LED0002	01	TURNE361	3/22/12	4/09/12			0	Submitted
Spec Section 02 06 30											
UA0000-020630A01	1	Pothole and Trench Logs	TG0405-024	TRINE814	TURNE361	1/21/11	2/08/11	2/09/11	2/09/11	1	Make Corrections Noted
UA0000-020630A02	1	Subsurface Investigation Shop Drawings	TG0405-028	TRINE814	TURNE361	1/21/11	2/08/11	1/27/11	1/27/11	-12	Make Corrections Noted
UA0000-020630A02	2	Subsurface Investigation Shop Drawings	TG0405-028	TRINE814	TURNE361	1/31/11	2/16/11	2/08/11	2/08/11	-8	Make Corrections Noted
UG1020-020630B02	1	Potholing and Trench Logs - Natoma	TG0404-010	MSQUA902	TURNE361		4/08/11			0	Pending
UG1020-020630C01	1	Potholing Plan	TG0401-008	MSQUA902	TURNE361	3/09/11	3/25/11	3/25/11	3/25/11	0	No Exceptions Taken
UG1020-020630C02	1	Potholing and Trench Logs	TG0401-009	MSQUA902	TURNE361		3/14/11			0	Open
UG1020-020630D01	1	Potholing Plan	TG0406-006	MSQUA902	TURNE361	4/07/11	4/25/11	4/28/11	4/28/11	3	Make Corrections Noted
UG3020-020630A02	1	Subsurface Investigation Pothole Excavation Field Logs		TRINE814	TURNE361		2/08/11			0	Void

Project Office
175 Beale St
San Francisco, CA 94105
Phone (415) 978-5700 Fax (415) 904-8119

Submittal #	Cycle	Submittal Name	Submittal Package	From Company	To Company	Date Sent	Date Due	Date Returned	Date Sent to Sub	Days Late	Status
Spec Section 02 41 00											
UA0000-024100A01	1	Demolition & Sequencing Plans	TG0405-034	TRINE814	TURNE361	12/06/10	12/22/10	1/11/11	1/11/11	20	Make Corrections Noted
Spec Section 02 41 19											
TF2010-024119A01	1	Pile Removal - Trial Pile Extraction Plan	TG0300-300	BALFO900	TURNE361	2/14/11	3/03/11	2/25/11	2/25/11	-6	No Exceptions Taken
TF2010-024119A01	2	Pile Removal - Trial Pile Extraction Plan	TG0300-300	BALFO900	TURNE361	3/24/11	4/11/11	3/24/11	3/24/11	-18	No Exceptions Taken
TF2010-024119A02	1	Pile Removal - Design Report	TG0300-300	BALFO900	TURNE361	2/14/11	3/03/11	2/25/11	2/25/11	-6	Make Corrections Noted
TF2010-024119A02	2	Pile Removal - Design Report	TG0300-300	BALFO900	TURNE361	3/24/11	4/11/11	3/24/11	3/24/11	-18	Make Corrections Noted
TF2010-024119A03	1	Pile Removal - Production Pile Extraction Plan	TG0300-310	BALFO900	TURNE361	4/06/11	4/22/11	4/11/11	4/11/11	-11	Make Corrections Noted
TF2010-024119A04	1	Pile Removal - Documentation of Existing Timber Piles	TG0300-311	BALFO900	TURNE361	6/07/11	6/23/11	6/27/11	6/27/11	4	Make Corrections Noted
Spec Section 02 72 30											
UG3010-027230C01	1	Ductile Iron Pipe	TG0402-001	MSQUA902	TURNE361	10/24/11	11/09/11	10/27/11	10/27/11	-13	No Exceptions Taken
UG3010-027230C02	1	Push On & Mechanical Joint Gaskets	TG0402-002	MSQUA902	TURNE361	10/24/11	11/09/11	11/09/11	11/09/11	0	No Exceptions Taken
UG3010-027230C03	1	Precast Concrete Vaults	TG0402-003	MSQUA902	TURNE361	10/27/11	11/14/11			0	Submitted
UG3010-027230C04	1	Hydrant Paint	TG0402-004	MSQUA902	TURNE361		2/21/12			0	Pending
UG3010-027230C05	1	Warning Tape	TG0402-005	MSQUA902	TURNE361	10/24/11	11/09/11	10/27/11	10/27/11	-13	Make Corrections Noted
UG3010-027230C06	1	Pipe End Seal	TG0402-006	MSQUA902	TURNE361		2/21/12			0	Pending
UG3010-027230C07	1	Casing Insulators	TG0402-007	MSQUA902	TURNE361		2/21/12			0	Pending
UG3010-027230C08	1	Sample 8" pipe w/welded stops	TG0402-008	MSQUA902	TURNE361	2/13/12	2/29/12	3/08/12	3/08/12	8	Make Corrections Noted
UG3010-027230C09	1	Stainless steel tie rods, nuts & washers	TG0402-009	MSQUA902	TURNE361	10/24/11	11/09/11	10/27/11	10/27/11	-13	No Exceptions Taken
UG3010-027230C10	1	Wire benders	TG0402-010	MSQUA902	TURNE361		2/21/12			0	Pending
UG3010-027230C12	1	Pig Lead & Yarn	TG0402-012	MSQUA902	TURNE361	3/01/12	3/19/12	3/05/12	3/05/12	-14	No Exceptions Taken
UG3010-027230C13	1	Welder Certification	TG0402-013	MSQUA902	TURNE361	2/13/12	2/29/12	2/29/12	2/29/12	0	Make Corrections Noted
Spec Section 020630											
UG3020-020630A01	1	CDF Mix Design for Backfill of Investigation Trenches	TG0405-013	TRINE814	TURNE361	11/09/10	11/25/10	12/08/10	12/08/10	13	No Exceptions Taken
Spec Section 024100											
UG1020-024100B01	1	Utilities Demolition Plan	TG0434-008	MSQUA902	TURNE361	4/12/11	4/28/11	5/04/11	5/04/11	6	Revise and Resubmit
Spec Section 02723											
UG3010-002723B01	1	M Squared - AWSS Stainless Steel - Tie Rods, Nuts, and Washers	TG0404-008	MSQUA902	TURNE361	3/07/11	3/23/11	3/15/11	3/15/11	-8	Make Corrections Noted

Project Office
175 Beale St
San Francisco, CA 94105
Phone (415) 978-5700 Fax (415) 904-8119

Submittal #	Cycle	Submittal Name	Submittal Package	From Company	To Company	Date Sent	Date Due	Date Returned	Date Sent to Sub	Days Late	Status
Spec Section 02723 (continued)											
UG3010-002723B02	1	M Squared - AWSS Certified Journeyman Plumber Qualifications	TG0404-009	MSQUA902	TURNE361	3/08/11	3/24/11	3/15/11	3/15/11	-9	Make Corrections Noted
UG3010-0272314	1	Pipe Links and Sleeves	TG0402-027	MSQUA902	TURNE361	12/21/11	1/10/12	12/27/11	12/27/11	-14	Make Corrections Noted
Spec Section 027280											
UG3010-027280B02	1	Batteries and Enclosures	TG0402-028	MSQUA902	TURNE361	1/25/12	2/10/12	1/27/12	1/27/12	-14	No Exceptions Taken
Spec Section 03 20 01											
TA1020-032001A01	1	Rebar - Instrumentation Protection Slab - Mill Test Reports	TG0300-330	BALFO900	TURNE361	9/13/11	9/29/11	9/20/11	9/20/11	-9	No Exceptions Taken
TA1020-032001A02	1	Rebar - Welder AWS Certifications	TG0300-320	BALFO900	TURNE361	4/25/11	5/11/11	5/10/11	5/10/11	-1	No Action
TA1020-032001A03	1	Rebar - Manufacturer's Certificate	TG0300-320	BALFO900	TURNE361	4/25/11	5/11/11	5/10/11	5/10/11	-1	Make Corrections Noted
TA1020-032001A04	1	Rebar - Product Data (For Couplers, etc)	TG0300-320	BALFO900	TURNE361	4/25/11	5/11/11	5/10/11	5/10/11	-1	Make Corrections Noted
TA1020-032001A04	2	Rebar - Product Data (For Couplers, etc)	TG0300-320	BALFO900	TURNE361	6/07/11	6/23/11	6/21/11	6/21/11	-2	Make Corrections Noted
TA1020-032001A05	1	Rebar - Buttress Shop Drawings	TG0300-320	BALFO900	TURNE361	4/25/11	5/11/11	5/10/11	5/10/11	-1	Make Corrections Noted
TA1020-032001A06	1	Rebar - Mud Slab Shop Drawings	TG0300-340	BALFO900	TURNE361		10/26/12			0	Pending
TA1020-032001A07	1	Rebar - Mill Test Reports C-1	TG0300-331	BALFO900	TURNE361	2/09/12	2/27/12	3/01/12	3/01/12	3	No Exceptions Taken
TA1020-032001A08	1	Rebar Mill Certs Buttress Shaft N1	TG0300-332	BALFO900	TURNE361	2/09/12	2/27/12	3/01/12	3/01/12	3	Submitted
TA1020-032001A09	1	Rebar Mill Certificates Buttress Shaft C15	TG0300-333	BALFO900	TURNE361	2/09/12	2/27/12	3/01/12	3/01/12	3	Submitted
TA1020-032001A10	1	Rebar Mill Certs Buttress Shaft M15	TG0300-334	BALFO900	TURNE361	2/09/12	2/27/12	2/29/12	3/01/12	2	No Exceptions Taken
TA1020-032001A11	1	Rebar Mill Certs Buttress Shaft M1	TG0300-335	BALFO900	TURNE361	2/10/12	2/29/12	3/01/12	3/01/12	1	No Exceptions Taken
TA1020-032001A12	1	Rebar Mill Certs D15	TG0300-336	BALFO900	TURNE361	3/16/12	4/03/12			0	For Record Only
Spec Section 03 30 00											
TZ1010-033000A01	1	Concrete - Submittal Schedule	TG0300-350	BALFO900	TURNE361		10/26/12			0	Pending
TZ1010-033000A02	1	Mud Slab Concrete - Mix Designs	TG0300-355	BALFO900	TURNE361		10/26/12			0	Pending
TZ1010-033000A03	1	Mud Slab Concrete - Product Data	TG0300-355	BALFO900	TURNE361		10/26/12			0	Pending
TZ1010-033000A04	1	Mud Slab Concrete - Joint Locations	TG0300-360	BALFO900	TURNE361		10/26/12			0	Pending
TZ1010-033000A05	1	Mud Slab Concrete - Asbestos & PCB Certificationq	TG0300-370	BALFO900	TURNE361		10/26/12			0	Pending
TZ1010-033000A06	1	Mud Slab Concrete - Hazardous Material Notification	TG0300-370	BALFO900	TURNE361		10/26/12			0	Pending
Spec Section 03 30 01											
TZ1010-033001A01	1	General Site Mix - Mix Designs, Material Certs, and Product Data	TG0300-380	BALFO900	TURNE361	3/17/11	4/04/11	3/25/11	3/25/11	-10	Make Corrections Noted

Project Office
175 Beale St
San Francisco, CA 94105
Phone (415) 978-5700 Fax (415) 904-8119

Submittal #	Cycle	Submittal Name	Submittal Package	From Company	To Company	Date Sent	Date Due	Date Returned	Date Sent to Sub	Days Late	Status
Spec Section 03 30 01 (continued)											
TZ1010-033001A02	1	CLSM Mix - Mix Designs, Material Certs, and Product Data (F4E13878)	TG0300-381	BALFO900	TURNE361	3/28/11	4/13/11	3/30/11	3/30/11	-14	Make Corrections Noted
TZ1010-033001A04	1	Buttress Concrete - Proposed Trial Batch Test Program	TG0300-385	BALFO900	TURNE361	3/11/11	3/29/11	3/25/11	3/25/11	-4	Make Corrections Noted
TZ1010-033001A08	1	Buttress Concrete - LEED Submittal	TG0300-390	BALFO900	TURNE361	7/08/11	7/26/11	7/27/11	7/27/11	1	No Exceptions Taken
TZ1010-033001A09	1	Buttress Concrete - Closeout Submittal / Record Documents	TG0300-400	BALFO900	TURNE361	12/30/11	1/17/12			0	Rejected
TZ1010-033001A09	2	Buttress Concrete - Closeout Submittal / Record Documents	TG0300-400	BALFO900	TURNE361	1/03/12	1/19/12			0	Rejected
TZ1010-033001A10	1	Buttress Concrete - Type B Secondary Shaft Mix 960PC3Z3	TG0300-386	BALFO900	TURNE361	4/20/11	5/06/11	5/05/11	5/09/11	-1	Revise and Resubmit
TZ1010-033001A10	2	Buttress Concrete - Type B Secondary Shaft Mix 960PC3Z3	TG0300-386	BALFO900	TURNE361	10/04/11	10/20/11	10/06/11	10/11/11	-14	Revise and Resubmit
TZ1010-033001A10	3	Buttress Concrete - Type B Secondary Shaft Mix 960PC3Z3	TG0300-386	BALFO900	TURNE361	2/15/12	3/02/12	2/22/12	2/22/12	-9	Revise and Resubmit
TZ1010-033001A10	4	Buttress Concrete - Type B Secondary Shaft Mix 960PC3Z3	TG0300-386	BALFO900	TURNE361	3/05/12	3/21/12	3/06/12	3/07/12	-15	Revise and Resubmit
TZ1010-033001A11	1	CLSM Mix F4E138N8 - Mix Designs, Material Certs, and Product Data	TG0300-382	BALFO900	TURNE361	4/20/11	5/06/11	5/05/11	5/09/11	-1	No Exceptions Taken
TZ1010-033001A12	1	CLSM Mix F4E138P8 - Mix Designs, Material Certs, and Product Data	TG0300-382	BALFO900	TURNE361	4/20/11	5/06/11	5/05/11	5/09/11	-1	Make Corrections Noted
TZ1010-033001A13	1	Buttress Shoring Work Pad Concrete Mix Design - Cemex Mix#1518445	TG0300-383	BALFO900	TURNE361	5/23/11	6/09/11	6/06/11	6/06/11	-3	For Record Only
TZ1010-033001A14	1	CLSM - Buttress Shoring Work Pad - Cemex Mix #1518444	TG0300-383	BALFO900	TURNE361	5/23/11	6/09/11	6/06/11	6/06/11	-3	For Record Only
TZ1010-033001A15	1	Primary Shaft Buttress Mix Design - Mix #85AEC3B6 & Logger Temperature Data	TG0300-387	BALFO900	TURNE361	7/08/11	7/26/11	7/21/11	8/02/11	-5	Make Corrections Noted
TZ1010-033001A15	2	Primary Shaft Buttress Mix Design - Mix #85AEC3B6 & Logger Temperature Data	TG0300-387	BALFO900	TURNE361	8/10/11	8/26/11	8/23/11	8/24/11	-3	Make Corrections Noted
TZ1010-033001A15	3	Primary Shaft Buttress Mix Design - Mix #85AEC3B6 & Logger Temperature Data	TG0300-387	BALFO900	TURNE361	10/04/11	10/20/11	10/06/11	10/11/11	-14	Make Corrections Noted
TZ1010-033001A16	1	Primary Shaft Buttress Mix Design - Mix #86AEC3A6	TG0300-387	BALFO900	TURNE361	7/08/11	7/26/11	7/21/11	8/02/11	-5	Make Corrections Noted
TZ1010-033001A16	2	Primary Shaft Buttress Mix Design - Mix #86AEC3A6	TG0300-387	BALFO900	TURNE361	8/10/11	8/26/11	8/23/11	8/24/11	-3	Make Corrections Noted
TZ1010-033001A17	1	Primary Shaft Buttress Mix Design - Mix #87AEC3A6	TG0300-387	BALFO900	TURNE361	7/08/11	7/26/11	7/21/11	8/02/11	-5	Make Corrections Noted
TZ1010-033001A17	2	Primary Shaft Buttress Mix Design - Mix #87AEC3A6	TG0300-387	BALFO900	TURNE361	8/10/11	8/26/11	8/23/11	8/24/11	-3	Make Corrections Noted
TZ1010-033001A18	1	Buttress Shoring Work Pad Concrete - LEED Submittal	TG0300-384	BALFO900	TURNE361		8/19/11			0	Void
TZ1010-033001A19	1	Buttress Type 'A' Primary Shaft Mix Design - Mix #8FAEC3P6	TG0300-388	BALFO900	TURNE361	8/30/11	9/16/11	9/13/11	9/13/11	-3	Make Corrections Noted
TZ1010-033001A19	2	Buttress Type 'A' Primary Shaft Mix Design - Mix #8FAEC3P6	TG0300-388	BALFO900	TURNE361	10/04/11	10/20/11	10/06/11	10/11/11	-14	Make Corrections Noted

Project Office
175 Beale St
San Francisco, CA 94105
Phone (415) 978-5700 Fax (415) 904-8119

Submittal #	Cycle	Submittal Name	Submittal Package	From Company	To Company	Date Sent	Date Due	Date Returned	Date Sent to Sub	Days Late	Status
Spec Section 03 30 01 (continued)											
TZ1010-033001A20	1	Buttress Type 'A' Primary Shaft Mix Design - Mix #8FAEC3N6	TG0300-388	BALFO900	TURNE361	8/30/11	9/16/11	9/13/11	9/13/11	-3	Make Corrections Noted
TZ1010-033001A20	2	Buttress Type 'A' Primary Shaft Mix Design - Mix #8FAEC3N6	TG0300-388	BALFO900	TURNE361	11/28/11	12/14/11	12/21/11	12/21/11	7	Make Corrections Noted
TZ1010-033001A21	1	Buttress Type 'A' Primary Shaft Mix Design - Mix #8DGEC3P6	TG0300-388	BALFO900	TURNE361	8/30/11	9/16/11	9/13/11	9/13/11	-3	No Exceptions Taken
TZ1010-033001A22	1	Concrete - Sechelt Coarse Aggregate	TG0300-389	BALFO900	TURNE361	10/04/11	10/20/11	10/10/11		-10	No Exceptions Taken
TZ1010-033001A22	2	Concrete - Sechelt Coarse Aggregate	TG0300-389	BALFO900	TURNE361	10/10/11	10/26/11	10/14/11	10/14/11	-12	No Exceptions Taken
TZ1010-033001A23	1	Type "A" Primary Burttress Shaft Concrete Additional Mix Designs II	TG0300-391	BALFO900	TURNE361	1/11/12	1/27/12	2/03/12	2/06/12	7	Rejected
Spec Section 03 40 10											
UG3020-034010B08	1	Precast Catch Basin	TG0404-005	MSQUA902	TURNE361	2/10/11	3/01/11	2/16/11	2/16/11	-13	Rejected
UG3020-034010B08	2	Precast Catch Basin	TG0404-005	MSQUA902	TURNE361	2/25/11	3/15/11	3/09/11	3/09/11	-6	Rejected
UG3020-034010B08	3	Precast Catch Basin	TG0404-005	MSQUA902	TURNE361	3/25/11	4/12/11	3/30/11	3/30/11	-13	Rejected
UG3020-034010B09	1	Precast Supplier Conform Letter (ASTM C150)	TG0404-005	MSQUA902	TURNE361	2/10/11	3/01/11	2/16/11	2/16/11	-13	No Exceptions Taken
UG3020-034010B09	2	Precast Supplier Conform Letter (ASTM C150)	TG0404-005	MSQUA902	TURNE361	2/25/11	3/15/11	3/09/11	3/09/11	-6	No Exceptions Taken
Spec Section 031100											
UG3020-031100B01	1	Shop Drawings -Cast-in place Manhole	TG0404-003	MSQUA902	TURNE361	1/17/11	2/02/11	1/28/11	1/28/11	-5	No Exceptions Taken
UG3020-031100B02	1	Rebar & Tie Wire	TG0404-003	MSQUA902	TURNE361	1/17/11	2/02/11	1/28/11	1/28/11	-5	No Exceptions Taken
UG3020-031100B03	1	Form Ties	TG0404-003	MSQUA902	TURNE361	1/17/11	2/02/11	1/28/11	1/28/11	-5	No Exceptions Taken
UG3020-031100B04	1	Formwork Material	TG0404-003	MSQUA902	TURNE361	1/17/11	2/02/11	1/28/11	1/28/11	-5	No Exceptions Taken
Spec Section 033010											
UG2010-033010B01	1	Cement-Certifications	TG0434-025	MSQUA902	TURNE361	12/20/10	1/10/11	12/30/10	8/19/11	-11	No Exceptions Taken
UG2010-033010B02	1	Aggregates-proof of compatibilty w/cement	TG0434-025	MSQUA902	TURNE361	12/20/10	1/10/11	12/30/10	8/19/11	-11	No Exceptions Taken
UG2010-033010B03	1	Admixtures-Cert of Conformance	TG0434-025	MSQUA902	TURNE361	12/20/10	1/10/11	12/30/10	8/19/11	-11	No Exceptions Taken
UG2010-033010B04	1	Concrete Mix - Manhole Base	TG0434-025	MSQUA902	TURNE361	12/20/10	1/10/11	12/30/10	8/19/11	-11	No Exceptions Taken
UG2010-033010B05	1	Concrete Mix - Street Base	TG0434-025	MSQUA902	TURNE361	4/18/11	5/04/11	4/28/11	8/19/11	-6	No Exceptions Taken
UG2010-033010B05	2	Concrete Mix - Street Base	TG0434-025	MSQUA902	TURNE361	8/19/11	9/07/11	8/25/11	8/25/11	-13	No Exceptions Taken
UG2010-033010B05	3	Concrete Mix - Street Base	TG0434-025	MSQUA902	TURNE361	9/13/11	9/29/11	10/05/11	10/05/11	6	No Exceptions Taken
UG2010-033010B05	4	Concrete Mix - Street Base	TG0434-025	MSQUA902	TURNE361	10/11/11	10/27/11	10/24/11	10/24/11	-3	No Exceptions Taken
UG2010-033010B06	1	Concrete Mix - Thrust Blocks	TG0434-025	MSQUA902	TURNE361	12/20/10	1/10/11	12/30/10	8/19/11	-11	No Exceptions Taken
UG2010-033010B07	1	Curb and Gutter Mix	TG0434-025	MSQUA902	TURNE361	5/19/11	6/07/11	5/26/11	8/19/11	-12	No Exceptions Taken
UG2010-033010B08	1	Sidewalk Mix	TG0434-025	MSQUA902	TURNE361	5/19/11	6/07/11	5/26/11	8/19/11	-12	No Exceptions Taken

Project Office
175 Beale St
San Francisco, CA 94105
Phone (415) 978-5700 Fax (415) 904-8119

Submittal #	Cycle	Submittal Name	Submittal Package	From Company	To Company	Date Sent	Date Due	Date Returned	Date Sent to Sub	Days Late	Status
Spec Section 033010 (continued)											
UG3020-033010A01	1	Concrete Mix Design for CIP Manhole Foundations & Structures	TG0405-004	TRINE814	TURNE361	10/27/10	11/12/10	11/18/10	11/18/10	6	No Exceptions Taken
UG4020-033010A02	1	Rebar Shop Drawing for Light Pole Foundations	TG0405-007	TRINE814	TURNE361	10/29/10	11/16/10	11/18/10	11/18/10	2	No Exceptions Taken
UG4020-033010A03	1	Concrete Mix Design for Light Pole Foundations	TG0405-007	TRINE814	TURNE361	10/29/10	11/16/10	11/18/10	11/18/10	2	No Exceptions Taken
Spec Section 034010											
UG3020-034010B01	1	Precast Manhole	TG0404-004	MSQUA902	TURNE361	1/18/11	2/03/11	1/26/11	1/26/11	-8	No Exceptions Taken
UG3020-034010B03	1	Manhole Frame and Cover	TG0404-004	MSQUA902	TURNE361	1/18/11	2/03/11	1/26/11	1/26/11	-8	No Exceptions Taken
UG3020-034010B04	1	Precast Catch Basin	TG0404-004	MSQUA902	TURNE361	1/18/11	2/03/11	1/26/11	1/26/11	-8	No Exceptions Taken
UG3020-034010B05	1	Catch Basin Frame & Grate	TG0404-004	MSQUA902	TURNE361	1/18/11	2/16/11	1/26/11	1/26/11	-21	Make Corrections Noted
UG3020-034010B06	1	Supplier Conform Letter (ASTM C150)	TG0404-004	MSQUA902	TURNE361	1/18/11	2/03/11	1/26/11	1/26/11	-8	No Exceptions Taken
Spec Section 05 12 01											
TA2010-051201A01	1	Structural Steel - Shop Drawings	TG0300-410	BALFO900	TURNE361	3/08/11	3/24/11	3/29/11	3/29/11	5	Make Corrections Noted
TA2010-051201A02	1	Structural Steel - Erection Drawings	TG0300-410	BALFO900	TURNE361	3/08/11	3/24/11	3/29/11	3/29/11	5	No Exceptions Taken
TA2010-051201A02	2	Structural Steel - Erection Drawings	TG0300-410	BALFO900	TURNE361	4/05/11	4/21/11	4/19/11	4/19/11	-2	No Exceptions Taken
TA2010-051201A03	1	Structural Steel - Contractor Certificate of Compliance for Materials	TG0300-412	BALFO900	TURNE361	4/29/11	5/17/11	5/11/11	5/11/11	-6	No Exceptions Taken
TA2010-051201A04	1	Structural Steel - Manufacturer's Test Reports and Certifications	TG0300-412	BALFO900	TURNE361	4/29/11	5/17/11	5/11/11	5/11/11	-6	Make Corrections Noted
TA2010-051201A05	1	Structural Steel - Weld Procedures	TG0300-410	BALFO900	TURNE361	3/08/11	3/24/11	3/29/11	3/29/11	5	Make Corrections Noted
TA2010-051201A06	1	Structural Steel - Fabricators identification mark system	TG0300-410	BALFO900	TURNE361	3/08/11	3/24/11	3/29/11	3/29/11	5	Make Corrections Noted
TA2010-051201A07	1	Structural Steel - LEED Submittal	TG0300-412	BALFO900	TURNE361	4/29/11	5/17/11	5/11/11	5/11/11	-6	No Exceptions Taken
TA2010-051201A07	2	Structural Steel - LEED Submittal	TG0300-412	BALFO900	TURNE361	5/31/11	6/16/11	6/16/11	6/16/11	0	No Exceptions Taken
TA2010-051201A08	1	Structural Steel - Contractors QA Plan	TG0300-413	BALFO900	TURNE361	5/04/11	5/20/11	5/23/11	5/23/11	3	No Exceptions Taken
TA2010-051201A08	2	Structural Steel - Contractors QA Plan	TG0300-413	BALFO900	TURNE361	6/07/11	6/23/11	6/21/11	6/21/11	-2	No Exceptions Taken
TA2010-051201A09	1	Structural Steel - Qualifications of QA Inspectors	TG0300-413	BALFO900	TURNE361	5/04/11	5/20/11	5/23/11	5/23/11	3	For Record Only
TA2010-051201A10	1	Structural Steel - Qualifications of Welders	TG0300-411	BALFO900	TURNE361	4/25/11	5/11/11	5/12/11	5/12/11	1	For Record Only
TA2010-051201A11	1	Structural Steel - Add'l Qualifications of Welders	TG0300-411	BALFO900	TURNE361	4/28/11	5/16/11	5/12/11	5/12/11	-4	For Record Only
TA2010-051201A12	1	Structural Steel - Weld Procedures for Inclinometer Attachment Inside CDSM Shoring Wall	TG0300-414	BALFO900	TURNE361	5/13/11	6/01/11	5/25/11	5/25/11	-7	Make Corrections Noted
TA2010-051201A13	1	Structural Steel - Welding Wire Procedure for CDSM Beam Splicing	TG0300-415	BALFO900	TURNE361	5/13/11	6/01/11	5/23/11	5/23/11	-9	Make Corrections Noted
TA2010-051201A14	1	Structural Steel - Contractor Certificate of Compliance for Materials 2	TG0300-801	BALFO900	TURNE361	6/07/11	6/23/11	6/21/11	6/21/11	-2	No Exceptions Taken

Project Office
175 Beale St
San Francisco, CA 94105
Phone (415) 978-5700 Fax (415) 904-8119

Submittal #	Cycle	Submittal Name	Submittal Package	From Company	To Company	Date Sent	Date Due	Date Returned	Date Sent to Sub	Days Late	Status
Spec Section 05 12 01 (continued)											
TA2010-051201A15	1	Structural Steel - Manufacturer's Test Reports and Certifications 2	TG0300-801	BALFO900	TURNE361	6/07/11	6/23/11	6/21/11	6/21/11	-2	No Exceptions Taken
TA2010-051201A16	1	Structural Steel - Additional Weld Procedure for CDSM Beam Splicing & Product Data - 30degree Welding	TG0300-416	BALFO900	TURNE361	6/30/11	7/19/11	7/13/11	7/13/11	-6	No Exceptions Taken
TA2010-051201A16	2	Structural Steel - Additional Weld Procedure for CDSM Beam Splicing & Product Data - 30degree Welding	TG0300-416	BALFO900	TURNE361	7/13/11	7/29/11	7/18/11	7/18/11	-11	No Exceptions Taken
TA2010-051201A17	1	Structural Steel - Contractor Certificate of Compliance for Materials 3	TG0300-802	BALFO900	TURNE361	7/20/11	8/05/11	8/03/11	8/03/11	-2	No Exceptions Taken
TA2010-051201A17	2	Structural Steel - Contractor Certificate of Compliance for Materials 3	TG0300-802	BALFO900	TURNE361	8/10/11	8/26/11	8/23/11	8/23/11	-3	No Exceptions Taken
TA2010-051201A18	1	Structural Steel - Manufacturer's Test Reports and Certifications 3	TG0300-802	BALFO900	TURNE361	7/20/11	8/05/11	8/03/11	8/03/11	-2	No Exceptions Taken
TA2010-051201A18	2	Structural Steel - Manufacturer's Test Reports and Certifications 3	TG0300-802	BALFO900	TURNE361	8/10/11	8/26/11	8/23/11	8/23/11	-3	No Exceptions Taken
Spec Section 11 57 00											
UG3010-011570B01	1	Traffic Control Plans	TG0402-014	MSQUA902	TURNE361	9/08/11	9/26/11	10/05/11	10/05/11	9	No Exceptions Taken
UG3010-011570B01	2	Traffic Control Plans	TG0402-014	MSQUA902	TURNE361	1/25/12	2/10/12	2/15/12	2/15/12	5	No Exceptions Taken
Spec Section 11050											
UA0000-011050B01	1	Survey & Control Points	TG0434-023	MSQUA902	TURNE361	3/08/11	3/24/11	3/15/11	3/15/11	-9	No Exceptions Taken
Spec Section 11310											
UA0000-011310C01	1	Construction Schedule Submittal (PDF)	TG0401-002	MSQUA902	TURNE361	2/14/11	3/03/11	3/09/11	3/09/11	6	No Exceptions Taken
UA0000-011310C01	2	Construction Schedule Submittal (PDF)	TG0401-002	MSQUA902	TURNE361	3/10/11	3/28/11	3/30/11	3/30/11	2	No Exceptions Taken
UA0000-011310C02	1	Construction Schedule Submittal Narrative	TG0401-002	MSQUA902	TURNE361	2/14/11	3/03/11	3/09/11	3/09/11	6	No Exceptions Taken
UA0000-011310C02	2	Construction Schedule Submittal Narrative	TG0401-002	MSQUA902	TURNE361	3/10/11	3/28/11	3/30/11	3/30/11	2	No Exceptions Taken
UA0000-011310C03	1	Construction Schedule Submittal (XER)	TG0401-002	MSQUA902	TURNE361	2/14/11	3/03/11	3/09/11	3/09/11	6	No Exceptions Taken
UA0000-011310C03	2	Construction Schedule Submittal (XER)	TG0401-002	MSQUA902	TURNE361	3/10/11	3/28/11	3/30/11	3/30/11	2	No Exceptions Taken
Spec Section 11340											
UA0000-011340B02	1	TG04.1 Executed Contract	TG0401-001	MSQUA902	TURNE361	2/01/11	2/01/11	2/03/11	2/04/11	2	For Record Only
Spec Section 16 01 00											
UG3010-160100C01	1	Electrical Materials	TG0402-015	MSQUA902	TURNE361	11/01/11	11/17/11	11/18/11	11/18/11	1	No Exceptions Taken
UG3010-160100C01	2	Electrical Materials	TG0402-015	MSQUA902	TURNE361	3/14/12	3/30/12	3/27/12	3/27/12	-3	No Exceptions Taken
Spec Section 16010											
UG3010-016010B02	1	AWSS Antenna	TG0402-026	MSQUA902	TURNE361	11/18/11	12/08/11	12/20/11	12/22/11	12	No Exceptions Taken
Spec Section 20630											

Project Office
175 Beale St
San Francisco, CA 94105
Phone (415) 978-5700 Fax (415) 904-8119

Submittal #	Cycle	Submittal Name	Submittal Package	From Company	To Company	Date Sent	Date Due	Date Returned	Date Sent to Sub	Days Late	Status
Spec Section 20630 (continued)											
UG1020-020630B01	1	Potholing Plan	TG0434-024	MSQUA902	TURNE361	12/20/10	1/21/11	12/30/10	1/03/11	-22	No Exceptions Taken
Spec Section 31 00 00											
TA2010-310000A01	1	Mass Excavation - Competent Person(s)	TG0300-420	BALFO900	TURNE361	11/09/11	11/29/11	11/22/11	11/22/11	-7	For Record Only
TA2010-310000A02	1	Mass Excavation - Quality Plan	TG0300-420	BALFO900	TURNE361	11/09/11	11/29/11	11/22/11	11/22/11	-7	No Exceptions Taken
TA2010-310000A03	1	Mass Excavation - Material Samples	TG0300-430	BALFO900	TURNE361	11/09/11	11/29/11	11/23/11	11/28/11	-6	No Exceptions Taken
TA2010-310000A04	1	Mass Excavation - Material Backfill	TG0300-440	BALFO900	TURNE361	11/09/11	11/29/11	11/23/11	11/28/11	-6	Make Corrections Noted
TA2010-310000A05	1	Mass Excavation LEED Submittal	TG0300-450	BALFO900	TURNE361	11/09/11	11/29/11	11/23/11	11/28/11	-6	Make Corrections Noted
TA2010-310000A06	1	Mass Excavation Work Plan	TG0300-460	BALFO900	TURNE361	12/27/11	1/12/12	12/08/11	12/09/11	-35	For Record Only
TA2010-310000A06	2	Mass Excavation Work Plan	TG0300-460	BALFO900	TURNE361	12/27/11	1/12/12	1/10/12	1/10/12	-2	For Record Only
TA2010-310000A08	1	Earthwork Closeout	TG0300-480	BALFO900	TURNE361		11/06/13			0	Pending
Spec Section 31 09 13											
TA2010-310913A01	1	Geotechnical Instrumentation and Monitoring	TG0300-490	BALFO900	TURNE361	4/25/11	5/11/11	5/10/11	5/10/11	-1	No Exceptions Taken
Spec Section 31 23 10											
UA3020-312310A02	1	Underground Detectable Warning Tape for JT Utilities	TG0405-038	TRINE814	TURNE361	1/03/11	1/19/11	1/18/11	1/18/11	-1	No Exceptions Taken
UA3020-312310A03	1	Gradation Analysis of Sand Bedding for AT&T Ducts & Gas Pipe	TG0405-038	TRINE814	TURNE361	1/03/11	1/19/11	1/18/11	1/18/11	-1	No Exceptions Taken
UA3020-312310A04	1	Import Backfill Material - Sieve Analysis	TG0405-043	TRINE814	TURNE361	1/18/11	2/03/11	1/28/11	1/28/11	-6	Make Corrections Noted
UA3020-312310A04	2	Import Backfill Material - Sieve Analysis	TG0405-043	TRINE814	TURNE361	2/02/11	2/18/11	2/11/11	2/11/11	-7	Make Corrections Noted
UA3020-312310A05	1	Import Backfill Material - Sample	TG0405-043	TRINE814	TURNE361	2/02/11	2/18/11	2/11/11	2/11/11	-7	Make Corrections Noted
Spec Section 31 23 13											
TZ1030-312313A01	1	Construction of Work Platform for Equipment	TG0300-500	BALFO900	TURNE361	4/20/11	5/06/11	5/05/11	5/09/11	-1	Make Corrections Noted
TZ1030-312313A02	1	Subgrade Preparation LEED Submittal	TG0300-510	BALFO900	TURNE361	7/13/11	7/29/11	7/22/11	7/26/11	-7	Revise and Resubmit
TZ1030-312313A02	2	Subgrade Preparation LEED Submittal	TG0300-510	BALFO900	TURNE361	3/05/12	3/21/12	3/09/12	3/09/12	-12	Revise and Resubmit
Spec Section 31 23 19											
TA2010-312319A01	1	Dewatering - Layout Drawings and Design Report	TG0300-520	BALFO900	TURNE361	4/25/11	5/11/11	5/10/11	5/10/11	-1	Make Corrections Noted
TA2010-312319A02	1	Dewatering - Product Data	TG0300-520	BALFO900	TURNE361	4/25/11	5/11/11	5/10/11	5/10/11	-1	Make Corrections Noted
TA2010-312319A03	1	Dewatering - Design Data	TG0300-520	BALFO900	TURNE361	4/25/11	5/11/11	5/10/11	5/10/11	-1	For Record Only
TA2010-312319A03	2	Dewatering - Design Data	TG0300-520	BALFO900	TURNE361	1/20/12	2/07/12	2/06/12	2/06/12	-1	For Record Only

Project Office
175 Beale St
San Francisco, CA 94105
Phone (415) 978-5700 Fax (415) 904-8119

Submittal #	Cycle	Submittal Name	Submittal Package	From Company	To Company	Date Sent	Date Due	Date Returned	Date Sent to Sub	Days Late	Status
Spec Section 31 23 19 (continued)											
TA2010-312319A03	3	Dewatering - Design Data	TG0300-520	BALFO900	TURNE361	2/13/12	2/29/12	2/29/12	2/29/12	0	For Record Only
TA2010-312319A03	4	Dewatering - Design Data	TG0300-520	BALFO900	TURNE361		10/04/11		3/14/12	0	For Record Only
TA2010-312319A04	1	Dewatering - Initial Installation Report	TG0300-521	BALFO900	TURNE361		10/04/11			0	Pending
TA2010-312319A05	1	Dewatering Closeout - Record Documents and Transfer Ownership	TG0300-530	BALFO900	TURNE361		12/23/14			0	Pending
TA2010-312319A06	1	Dewatering - Contractor Qualifications	TG0300-520	BALFO900	TURNE361	4/25/11	5/11/11	5/10/11	5/10/11	-1	No Exceptions Taken
TA2010-312319A07	1	Dewatering - System Pump Test	TG0300-522	BALFO900	TURNE361		1/02/12			0	Pending
TA2010-312319A08	1	Dewatering - System Pumping Data (Weekly)	TG0300-525	BALFO900	TURNE361	3/27/12	4/12/12	3/27/12	3/27/12	-16	Not Used
TA2010-312319A09	1	Dewatering - Groundwater Elevation Monitoring Data (Weekly)	TG0300-525	BALFO900	TURNE361	3/27/12	4/12/12	3/27/12	3/27/12	-16	Not Used
TA2010-312319A10	1	Dewatering for Pre-trenching Only	TG0300-527	BALFO900	TURNE361	4/25/11	5/11/11	5/10/11	5/10/11	-1	Make Corrections Noted
Spec Section 31 55 00											
TA2010-310913A02	1	Internal Bracing - Performance Monitoring	TG0300-491	BALFO900	TURNE361	12/20/11	1/09/12	2/08/12	2/08/12	30	Submitted
TA2010-310913A02	2	Internal Bracing - Performance Monitoring	TG0300-491	BALFO900	TURNE361	2/24/12	3/13/12			0	Submitted
TA2010-315500A01	1	Internal Bracing - Engineer of Record Information and Qualifications	TG0300-540	BALFO900	TURNE361	3/02/11	3/18/11	3/25/11	3/25/11	7	No Exceptions Taken
TA2010-315500A02	1	Internal Bracing - Peer Reviewer Information and Qualifications	TG0300-540	BALFO900	TURNE361	3/02/11	3/18/11	3/25/11	3/25/11	7	No Exceptions Taken
TA2010-315500A02	2	Internal Bracing - Peer Reviewer Information and Qualifications	TG0300-540	BALFO900	TURNE361	4/12/11	4/28/11	4/12/11	4/12/11	-16	No Exceptions Taken
TA2010-315500A03	1	Internal Bracing - Installer Information and Qualifications	TG0300-543	BALFO900	TURNE361	11/17/11	12/07/11	12/16/11	12/16/11	9	Submitted
TA2010-315500A03	2	Internal Bracing - Installer Information and Qualifications	TG0300-543	BALFO900	TURNE361	2/23/12	3/12/12	2/10/12	2/10/12	-31	Submitted
TA2010-315500A03	3	Internal Bracing - Installer Information and Qualifications	TG0300-543	BALFO900	TURNE361		10/18/11		2/23/12	0	Submitted
TA2010-315500A04	1	Internal Bracing - All Procedures for Preloading, Incl. Certified Calibration Charts for Jack-gages	TG0300-545	BALFO900	TURNE361	2/21/12	3/08/12	2/23/12	2/23/12	-14	For Record Only
TA2010-315500A05	1	Internal Bracing - Manufacturer Certifications (New Steel) or Coupon Testing (Salvage Steel)	TG0300-544	BALFO900	TURNE361	3/02/12	3/20/12	2/16/12	2/16/12	-33	Revise and Resubmit
TA2010-315500A05	2	Internal Bracing - Manufacturer Certifications (New Steel) or Coupon Testing (Salvage Steel)	TG0300-544	BALFO900	TURNE361	3/05/12	3/21/12		3/02/12	0	Revise and Resubmit
TA2010-315500A05	3	Internal Bracing - Manufacturer Certifications (New Steel) or Coupon Testing (Salvage Steel)	TG0300-544	BALFO900	TURNE361	3/20/12	4/05/12	3/22/12	3/22/12	-14	Revise and Resubmit
TA2010-315500A06	1	Internal Bracing - Weld Procedures	TG0300-547	BALFO900	TURNE361	12/19/11	1/06/12	12/16/11	12/16/11	-21	No Exceptions Taken
TA2010-315500A06	2	Internal Bracing - Weld Procedures	TG0300-547	BALFO900	TURNE361	1/04/12	1/20/12	1/06/12	1/06/12	-14	No Exceptions Taken
TA2010-315500A07	1	Internal Bracing - Welder Certifications	TG0300-546	BALFO900	TURNE361	11/09/11	11/29/11	12/16/11	12/16/11	17	No Exceptions Taken
TA2010-315500A08	1	Internal Bracing - QC/Construction Plan	TG0300-543	BALFO900	TURNE361	11/17/11	12/07/11	12/16/11	12/16/11	9	Submitted
TA2010-315500A08	2	Internal Bracing - QC/Construction Plan	TG0300-543	BALFO900	TURNE361	2/23/12	3/12/12	2/10/12	2/10/12	-31	Submitted

Project Office
175 Beale St
San Francisco, CA 94105
Phone (415) 978-5700 Fax (415) 904-8119

Submittal #	Cycle	Submittal Name	Submittal Package	From Company	To Company	Date Sent	Date Due	Date Returned	Date Sent to Sub	Days Late	Status
Spec Section 31 55 00 (continued)											
TA2010-315500A08	3	Internal Bracing - QC/Construction Plan	TG0300-543	BALFO900	TURNE361		10/18/11		2/23/12	0	Submitted
TA2010-315500A09	1	Internal Bracing - Inspection Plan	TG0300-543	BALFO900	TURNE361	11/17/11	12/07/11	12/16/11	12/16/11	9	Submitted
TA2010-315500A09	2	Internal Bracing - Inspection Plan	TG0300-543	BALFO900	TURNE361	2/23/12	3/12/12	2/10/12	2/10/12	-31	Submitted
TA2010-315500A09	3	Internal Bracing - Inspection Plan	TG0300-543	BALFO900	TURNE361		10/18/11		2/23/12	0	Submitted
TA2010-315500A10	1	Internal Bracing - 50% Design Drawings & Calculations	TG0300-541	BALFO900	TURNE361	3/08/11	3/24/11	3/29/11	3/29/11	5	For Record Only
TA2010-315500A11	1	Internal Bracing - Construction Dwgs & Specs	TG0300-542	BALFO900	TURNE361	5/04/11	5/20/11	6/02/11	6/02/11	13	Make Corrections Noted
TA2010-315500A11	2	Internal Bracing - Construction Dwgs & Specs	TG0300-542	BALFO900	TURNE361	7/11/11	7/27/11	8/03/11	8/04/11	7	Make Corrections Noted
TA2010-315500A11	3	Internal Bracing - Construction Dwgs & Specs	TG0300-542	BALFO900	TURNE361	10/17/11	6/01/11	10/17/11	10/19/11	138	Make Corrections Noted
TA2010-315500A12	1	Internal Bracing - Engineering Calcs	TG0300-542	BALFO900	TURNE361	5/04/11	5/20/11	6/02/11	6/02/11	13	For Record Only
TA2010-315500A12	2	Internal Bracing - Engineering Calcs	TG0300-542	BALFO900	TURNE361	7/11/11	7/27/11	8/03/11	8/04/11	7	For Record Only
TA2010-315500A12	3	Internal Bracing - Engineering Calcs	TG0300-542	BALFO900	TURNE361	10/17/11	6/01/11	10/17/11	10/19/11	138	For Record Only
TA2010-315500A13	1	Internal Bracing - Basis of Design Summary	TG0300-542	BALFO900	TURNE361	5/04/11	5/20/11	6/02/11	6/02/11	13	Make Corrections Noted
TA2010-315500A14	1	Internal Bracing - Weld Procedures (Shop Welding)	TG0300-548	BALFO900	TURNE361	11/17/11	12/07/11	1/06/12	1/09/12	30	Submitted
TA2010-315500A14	2	Internal Bracing - Weld Procedures (Shop Welding)	TG0300-548	BALFO900	TURNE361	2/16/12	3/05/12	2/14/12	2/16/12	-20	Submitted
TA2010-315500A14	3	Internal Bracing - Weld Procedures (Shop Welding)	TG0300-548	BALFO900	TURNE361	3/02/12	3/20/12			0	Submitted
TA2010-315500A15	1	Internal Bracing - Weld Procedures - Additional	TG0300-549	BALFO900	TURNE361	12/05/11	12/21/11	12/30/11		9	No Exceptions Taken
TA2010-315500A15	2	Internal Bracing - Weld Procedures - Additional	TG0300-549	BALFO900	TURNE361	12/30/11	1/17/12	1/06/12	1/06/12	-11	No Exceptions Taken
TZ1030-315500A14	1	Internal Bracing - Responses to URS Comments	TG0300-542	BALFO900	TURNE361	7/11/11	7/27/11	8/03/11	8/04/11	7	For Record Only
TZ1030-315500A14	2	Internal Bracing - Responses to URS Comments	TG0300-542	BALFO900	TURNE361	10/17/11	7/27/11	10/17/11	10/19/11	82	For Record Only
TZ1030-315500A15	1	Internal Bracing - Re-bracing	TG0300-550	BALFO900	TURNE361		4/02/13			0	Pending
Spec Section 31 56 13											
TA2010-315613A01	1	Shoring Wall - Equipment Specifications and Calibration Data	TG0300-580	BALFO900	TURNE361	3/09/11	3/25/11	3/25/11	3/25/11	0	Make Corrections Noted
TA2010-315613A02	1	Shoring Wall - Work Plan	TG0300-580	BALFO900	TURNE361	3/09/11	3/25/11	3/25/11	3/25/11	0	Make Corrections Noted
TA2010-315613A02	2	Shoring Wall - Work Plan	TG0300-580	BALFO900	TURNE361	4/18/11	5/04/11	5/03/11	5/03/11	-1	Make Corrections Noted
TA2010-315613A03	1	Shoring Wall - Cement Grout Mix Designs	TG0300-580	BALFO900	TURNE361	3/09/11	3/25/11	3/25/11	3/25/11	0	Make Corrections Noted
TA2010-315613A03	2	Shoring Wall - Cement Grout Mix Designs	TG0300-580	BALFO900	TURNE361	6/13/11	6/29/11	6/29/11	6/29/11	0	Make Corrections Noted
TA2010-315613A04	1	Shoring Wall - Waterproofing plan	TG0300-580	BALFO900	TURNE361	3/09/11	3/25/11	3/25/11	3/25/11	0	No Exceptions Taken

Project Office
175 Beale St
San Francisco, CA 94105
Phone (415) 978-5700 Fax (415) 904-8119

Submittal #	Cycle	Submittal Name	Submittal Package	From Company	To Company	Date Sent	Date Due	Date Returned	Date Sent to Sub	Days Late	Status
Spec Section 31 56 13 (continued)											
TA2010-315613A04	2	Shoring Wall - Waterproofing plan	TG0300-580	BALFO900	TURNE361	4/18/11	5/04/11	5/03/11	5/03/11	-1	No Exceptions Taken
TA2010-315613A05	1	Shoring Wall - LEED Submittal	TG0300-581	BALFO900	TURNE361	7/13/11	7/29/11	7/22/11	7/26/11	-7	No Exceptions Taken
TA2010-315613A05	2	Shoring Wall - LEED Submittal	TG0300-581	BALFO900	TURNE361	8/10/11	8/26/11	8/24/11	8/25/11	-2	No Exceptions Taken
TA2010-315613A07	1	Shoring Wall - Quality Assurance Plan	TG0300-580	BALFO900	TURNE361	3/09/11	3/25/11	3/25/11	3/25/11	0	Make Corrections Noted
TA2010-315613A08	1	Shoring Wall - CDSM Test Section No. 2 (Zone 1)	TG0300-582	30	TURNE361	8/24/11	9/12/11	8/31/11	9/01/11	-12	No Exceptions Taken
TA2010-315613A11	1	Shoring Wall - Record Documents - As Built Drawings and Unusual Conditions Encountered	TG0300-590	BALFO900	TURNE361	12/21/11	1/10/12	1/06/12	1/09/12	-4	Submitted
TA2010-315613A11	2	Shoring Wall - Record Documents - As Built Drawings and Unusual Conditions Encountered	TG0300-590	BALFO900	TURNE361	3/02/12	3/20/12			0	Submitted
TA2010-315613A12	1	Corrective Action Plan For Wide Flange Packing of Solider Plie No. 859	TG0300-584	BALFO900	TURNE361	1/24/12	2/09/12	2/14/12	2/14/12	5	Make Corrections Noted
TA2010-315613A14	1	Shoring Wall - Record Documents - As Built Drawings and Unusual Conditions Encountered CAD Files	TG0300-590	BALFO900	TURNE361	12/21/11	1/10/12	1/06/12	1/09/12	-4	Submitted
TA2010-315613A14	2	Shoring Wall - Record Documents - As Built Drawings and Unusual Conditions Encountered CAD Files	TG0300-590	BALFO900	TURNE361	3/02/12	3/20/12			0	Submitted
TZ2010-315613A12	1	Re-splicing of Welding Procedures for CDSM Solider Piles	TG0300-585	BALFO900	TURNE361	1/19/12	2/06/12	2/14/12	2/14/12	8	No Exceptions Taken
Spec Section 31 63 29											
TA1020-316329A01	1	Drilled Shafts - Previous Projects List	TG0300-600	BALFO900	TURNE361	4/28/11	5/16/11	5/25/11	5/25/11	9	No Exceptions Taken
TA1020-316329A02	1	Drilled Shafts - Statement of Awareness of Site Conditions	TG0300-600	BALFO900	TURNE361	4/28/11	5/16/11	5/25/11	5/25/11	9	No Exceptions Taken
TA1020-316329A03	1	Drilled Shafts - Installation Plan	TG0300-600	BALFO900	TURNE361	4/28/11	5/16/11	5/25/11	5/25/11	9	No Exceptions Taken
TA1020-316329A03	2	Drilled Shafts - Installation Plan	TG0300-600	BALFO900	TURNE361	6/08/11	6/24/11	6/23/11	6/23/11	-1	No Exceptions Taken
TA1020-316329A03	3	Drilled Shafts - Installation Plan	TG0300-600	BALFO900	TURNE361	7/27/11	8/12/11	7/28/11	7/29/11	-15	No Exceptions Taken
TA1020-316329A03	4	Drilled Shafts - Installation Plan	TG0300-600	BALFO900	TURNE361	8/25/11	9/13/11	9/08/11	9/12/11	-5	No Exceptions Taken
TA1020-316329A04	1	Drilled Shafts - Weld Procedures	TG0300-600	BALFO900	TURNE361	4/28/11	5/16/11	5/25/11	5/25/11	9	For Record Only
TA1020-316329A05	1	Drilled Shafts LEED Submittal	TG0300-600	BALFO900	TURNE361	4/28/11	5/16/11	5/25/11	5/25/11	9	No Action
TA1020-316329A06	1	Drilled Shafts Closeout - Records and As-Builts	TG0300-610	BALFO900	TURNE361	4/28/11	5/16/11	5/19/11	5/19/11	3	No Exceptions Taken
TA1020-316329A07	1	Drilled Shafts - Sonic Caliper Testing	TG0300-601	BALFO900	TURNE361	7/27/11	8/12/11	7/28/11	7/29/11	-15	No Exceptions Taken
TA1020-316329A07	2	Drilled Shafts - Sonic Caliper Testing	TG0300-601	BALFO900	TURNE361	8/10/11	8/26/11	8/23/11	8/23/11	-3	No Exceptions Taken
TA1020-316329A08	1	Drilled Shafts - Drilling Polymers (Alternate to Dry Flocculant)	TG0300-601	BALFO900	TURNE361	7/27/11	8/12/11	7/28/11	7/29/11	-15	No Exceptions Taken
TA1020-316329A08	2	Drilled Shafts - Drilling Polymers (Alternate to Dry Flocculant)	TG0300-601	BALFO900	TURNE361	8/10/11	8/26/11	8/23/11	8/23/11	-3	No Exceptions Taken
TA1020-316329A09	1	Drilled Shafts - CSL and BHDL Testing	TG0300-601	BALFO900	TURNE361	8/10/11	8/26/11	8/23/11	8/23/11	-3	No Exceptions Taken

Project Office
175 Beale St
San Francisco, CA 94105
Phone (415) 978-5700 Fax (415) 904-8119

Submittal #	Cycle	Submittal Name	Submittal Package	From Company	To Company	Date Sent	Date Due	Date Returned	Date Sent to Sub	Days Late	Status
Spec Section 31 63 33											
TA1020-316333A01	1	Micropile - Work Plan and Schedule	TG0300-620	BALFO900	TURNE361		7/30/12			0	Pending
TA1020-316333A02	1	Micropile - Contractor Qualifications	TG0300-620	BALFO900	TURNE361		7/30/12			0	Pending
TA1020-316333A03	1	Micropile - Product Data	TG0300-620	BALFO900	TURNE361		7/30/12			0	Pending
TA1020-316333A04	1	Micropile - Equipment Description	TG0300-620	BALFO900	TURNE361		7/30/12			0	Pending
TA1020-316333A05	1	Micropile - Installation Procedures	TG0300-620	BALFO900	TURNE361		7/30/12			0	Pending
TA1020-316333A06	1	Micropile - Working Drawings & Calcs	TG0300-620	BALFO900	TURNE361		7/30/12			0	Pending
TA1020-316333A07	1	Micropile - Performace and Proof Test Plans and Results	TG0300-630	BALFO900	TURNE361		9/10/12			0	Pending
TA1020-316333A08	1	Micropile - Grout Test Results	TG0300-640	BALFO900	TURNE361		7/30/12			0	Pending
Spec Section 312310											
UG1035-312310A01	1	Trinet Shoring Plan	TG0405-009	TRINE814	TURNE361	11/03/10	11/19/10	11/29/10	11/29/10	10	No Exceptions Taken
UG2010-312310B01	1	Pipe Bedding (Crushed Rock) - Sample	TG0434-002	MSQUA902	TURNE361	12/21/10	1/11/11	1/07/11	1/07/11	-4	No Exceptions Taken
UG2010-312310B02	1	Backfill Material - Sample	TG0434-002	MSQUA902	TURNE361	12/21/10	1/11/11	1/07/11	1/07/11	-4	No Exceptions Taken
UG2010-312310B03	1	Pipe Bedding (Crushed Rock) - Test Reports	TG0434-003	MSQUA902	TURNE361	12/20/10	1/21/11	1/05/11	1/05/11	-16	No Exceptions Taken
UG2010-312310B04	1	Backfill Material - Test Reports	TG0434-003	MSQUA902	TURNE361	12/20/10	1/21/11	1/05/11	1/05/11	-16	No Exceptions Taken
UG2010-312310B05	1	Methods of compaction	TG0434-004	MSQUA902	TURNE361	1/17/11	2/02/11	1/27/11	1/27/11	-6	Make Corrections Noted
UG2010-312310B06	1	Controlled Low Strength Fill Material	TG0434-006	MSQUA902	TURNE361	12/20/10	1/10/11	1/06/11	1/06/11	-4	No Exceptions Taken
UG2010-312310B07	1	Shoring Plan by Licensed CA Engineer	TG0434-005	MSQUA902	TURNE361	12/20/10	1/21/11	12/30/10	1/03/11	-22	No Exceptions Taken
UG2010-312310B08	1	Underground Plastic Warning Tape	TG0434-004	MSQUA902	TURNE361	1/17/11	2/02/11	1/27/11	1/27/11	-6	No Exceptions Taken
UG2010-312310B09	1	Ungerground Metalic Warning Tape	TG0434-004	MSQUA902	TURNE361	1/17/11	2/02/11	1/27/11	1/27/11	-6	No Exceptions Taken
UG2010-312310B10	1	Sand Cement Slurry Backfill	TG0434-006	MSQUA902	TURNE361	12/20/10	1/10/11	1/06/11	1/06/11	-4	No Exceptions Taken
UG2010-312310B11	1	Filter Fabric	TG0404-002	MSQUA902	TURNE361	12/20/10	1/21/11	1/05/11	1/05/11	-16	No Exceptions Taken
UG3010-312310A01	1	Gradation Analysis of Bedding Sand for Water Pipe	TG0405-032	TRINE814	TURNE361	11/22/10	12/08/10	12/08/10	12/08/10	0	No Exceptions Taken
Spec Section 317216											
UG3020-317216A01	1	Jacked Steel Casing	TG0404-012	MSQUA902	TURNE361	6/23/11	7/12/11	7/12/11	7/12/11	0	Make Corrections Noted
UG3020-317216A01	2	Jacked Steel Casing	TG0404-012	MSQUA902	TURNE361	6/28/11	6/28/11	6/28/11	6/28/11	0	Make Corrections Noted
UG3020-317216A01	3	Jacked Steel Casing	TG0404-012	MSQUA902	TURNE361	6/28/11	7/06/11	7/07/11	7/07/11	1	Make Corrections Noted
Spec Section 32 00 00											
UG3010-032000C01	1	Cast In place Vault- Shop Drawings	TG0402-016	MSQUA902	TURNE361		2/21/12			0	Pending
Spec Section 32 12 17											

Project Office
175 Beale St
San Francisco, CA 94105
Phone (415) 978-5700 Fax (415) 904-8119

Submittal #	Cycle	Submittal Name	Submittal Package	From Company	To Company	Date Sent	Date Due	Date Returned	Date Sent to Sub	Days Late	Status
Spec Section 32 12 17 (continued)											
TA2010-321217A01	1	Backfill Materials	TG0300-650	BALFO900	TURNE361	4/05/11	4/21/11	4/28/11	4/28/11	7	Make Corrections Noted
TA2010-321217A01	2	Backfill Materials	TG0300-650	BALFO900	TURNE361	5/09/11	5/25/11	6/02/11	6/02/11	8	Make Corrections Noted
TA2010-321217A02	1	Demolition and Removal Plan (Including any Temporary Shoring)	TG0300-650	BALFO900	TURNE361	4/05/11	4/21/11	4/28/11	4/28/11	7	Make Corrections Noted
TA2010-321217A02	2	Demolition and Removal Plan (Including any Temporary Shoring)	TG0300-650	BALFO900	TURNE361	5/09/11	5/25/11	6/02/11	6/02/11	8	Make Corrections Noted
TA2010-321217A03	1	Temporary Shoring and Bracing Calculations	TG0300-650	BALFO900	TURNE361	4/05/11	4/21/11	4/28/11	4/28/11	7	Make Corrections Noted
TA2010-321217A03	2	Temporary Shoring and Bracing Calculations	TG0300-650	BALFO900	TURNE361	5/09/11	5/25/11	6/02/11	6/02/11	8	Make Corrections Noted
TA2010-321217A05	1	Backfill Materials - Zone 1, 2, 3	TG0300-651	BALFO900	TURNE361	4/05/11	4/21/11	4/28/11	4/28/11	7	Make Corrections Noted
TA2010-321217A05	2	Backfill Materials - Zone 1, 2, 3	TG0300-651	BALFO900	TURNE361	5/17/11	6/03/11	6/09/11	6/09/11	6	Make Corrections Noted
TA2010-321217A06	1	Demolition and Removal Plan (Including any Temporary Shoring) - Zone 1, 2, 3	TG0300-651	BALFO900	TURNE361	4/05/11	4/21/11	4/28/11	4/28/11	7	Not Used
TA2010-321217A06	2	Demolition and Removal Plan (Including any Temporary Shoring) - Zone 1, 2, 3	TG0300-651	BALFO900	TURNE361	5/17/11	6/03/11	6/09/11	6/09/11	6	Not Used
TA2010-321217A06	3	Demolition and Removal Plan (Including any Temporary Shoring) - Zone 1, 2, 3	TG0300-651	BALFO900	TURNE361	6/30/11	7/19/11	7/22/11	7/26/11	3	Not Used
TA2010-321217A07	1	Temporary Shoring and Bracing Calculations - Zone 1, 2, 3	TG0300-651	BALFO900	TURNE361	4/05/11	4/21/11	4/28/11	4/28/11	7	Make Corrections Noted
TA2010-321217A07	2	Temporary Shoring and Bracing Calculations - Zone 1, 2, 3	TG0300-651	BALFO900	TURNE361	5/17/11	6/03/11	6/09/11	6/09/11	6	Make Corrections Noted
TA2010-321217A08	1	Temporary Shoring and Bracing Calculations - Zone 1, 2, 3 [For Record Only - Alternate Shoring Plan for Zone 3 Natoma St.]	TG0300-652	BALFO900	TURNE361	7/18/11	8/03/11	8/16/11	8/16/11	13	Make Corrections Noted
TA2010-321217A09	1	Temporary Shoring and Bracing Calculations - Zone 1, 2, 3 [For Record Only - Slide Rail Locations]	TG0300-652	BALFO900	TURNE361	7/18/11	8/03/11	8/16/11	8/16/11	13	No Exceptions Taken
Spec Section 32 17 24											
UG3020-321724A01	1	Pavement Markings	TG0405-016	TRINE814	TURNE361	1/31/11	2/16/11	2/09/11	2/09/11	-7	No Exceptions Taken
Spec Section 321217											
UG2010-321217A01	1	Trinet - Mix Design for Street Base Concrete	TG0405-010	TRINE814	TURNE361	11/04/10	11/22/10	11/18/10	11/18/10	-4	No Exceptions Taken
UG2010-321217A01	2	Trinet - Mix Design for Street Base Concrete	TG0405-010	TRINE814	TURNE361	5/02/11	5/18/11	5/17/11	5/17/11	-1	No Exceptions Taken
UG2010-321217A02	1	Trinet - Mix Design for Concrete Sidewalk	TG0405-010	TRINE814	TURNE361	11/04/10	11/22/10	11/18/10	11/18/10	-4	No Exceptions Taken
UG2010-321217A03	1	Mix Design for Concrete Curb & Gutter and Pavement	TG0405-010	TRINE814	TURNE361	11/04/10	11/22/10	11/18/10	11/18/10	-4	No Exceptions Taken
UG2010-321217A04	1	Trinet - Mix Design for Concrete Curb Ramps	TG0405-010	TRINE814	TURNE361	11/04/10	11/22/10	11/18/10	11/18/10	-4	No Exceptions Taken
UG2010-321217A05	1	Trinet - Mix Design for Asphalt Concrete Wearing Surface	TG0405-010	TRINE814	TURNE361	11/04/10	11/22/10	11/18/10	11/18/10	-4	Make Corrections Noted

Project Office
175 Beale St
San Francisco, CA 94105
Phone (415) 978-5700 Fax (415) 904-8119

Submittal #	Cycle	Submittal Name	Submittal Package	From Company	To Company	Date Sent	Date Due	Date Returned	Date Sent to Sub	Days Late	Status
Spec Section 321217 (continued)											
UG2010-321217A05	2	Trinet - Mix Design for Asphalt Concrete Wearing Surface	TG0405-010	TRINE814	TURNE361	6/16/11	7/05/11	7/05/11	7/05/11	0	Make Corrections Noted
UG2010-321217A05	3	Trinet - Mix Design for Asphalt Concrete Wearing Surface	TG0405-010	TRINE814	TURNE361	6/28/11	7/15/11	8/31/11	8/31/11	47	Make Corrections Noted
UG2010-321217A06	1	Trinet - Material Data Sheet for Ashpalt Emulsion Paint Binder	TG0405-010	TRINE814	TURNE361	11/04/10	11/22/10	11/18/10	11/18/10	-4	No Exceptions Taken
UG2010-321217B01	1	Asphalt Mix Design	TG0434-010	MSQUA902	TURNE361	12/20/10	1/21/11	1/05/11	1/05/11	-16	No Exceptions Taken
Spec Section 33 11 00											
UG3010-331100A01	1	Valves, fitting drawings	TG0405-017	TRINE814	TURNE361	11/16/10	12/02/10	12/03/10	12/06/10	1	No Exceptions Taken
UG3010-331100A01	2	Valves, fitting drawings	TG0405-017	TRINE814	TURNE361	2/24/11	3/14/11	3/09/11	3/09/11	-5	No Exceptions Taken
UG3010-331100A02	1	Joint drawings	TG0405-017	TRINE814	TURNE361	11/16/10	12/02/10	12/03/10	12/06/10	1	No Exceptions Taken
UG3010-331100A03	1	Installation instructions	TG0405-017	TRINE814	TURNE361	11/16/10	12/02/10	12/03/10	12/06/10	1	No Exceptions Taken
UG3010-331100A04	1	Pipe products	TG0405-017	TRINE814	TURNE361	11/16/10	12/02/10	12/03/10	12/06/10	1	No Exceptions Taken
UG3010-331100A05	1	Polyethylene product data	TG0405-017	TRINE814	TURNE361	11/16/10	12/02/10	12/03/10	12/06/10	1	No Exceptions Taken
UG3010-331100A06	1	Installation instructions	TG0405-017	TRINE814	TURNE361	11/16/10	12/02/10	12/03/10	12/06/10	1	No Exceptions Taken
Spec Section 33 31 10											
UG3020-333110A15	1	Post Construction TV Inspection	TG0405-023	TRINE814	TURNE361	8/30/11	9/16/11	9/07/11	9/07/11	-9	No Exceptions Taken
UG3020-333110A15	2	Post Construction TV Inspection	TG0405-023	TRINE814	TURNE361	11/28/11	12/14/11	12/19/11	12/22/11	5	No Exceptions Taken
UG3020-333110A15	3	Post Construction TV Inspection	TG0405-023	TRINE814	TURNE361	2/03/12	2/21/12	2/23/12	2/23/12	2	No Exceptions Taken
UG3020-333110A22	1	Alt Drain Rock Analysis for VCP Pipe Bedding	TG0405-045	TRINE814	TURNE361	1/27/11	2/14/11	2/01/11	2/01/11	-13	No Exceptions Taken
UG3020-333110A22	2	Alt Drain Rock Analysis for VCP Pipe Bedding	TG0405-045	TRINE814	TURNE361	4/05/11	4/21/11	4/22/11	4/25/11	1	No Exceptions Taken
UG3020-333110A22	3	Alt Drain Rock Analysis for VCP Pipe Bedding	TG0405-045	TRINE814	TURNE361	5/07/11	5/24/11	2/01/11	6/03/11	-112	No Exceptions Taken
UG3020-333110B08	1	M Squared - TV Inspection Sewer Natoma W - Existing Video	TG0404-006	MSQUA902	TURNE361		5/25/11			0	Open
UG3020-333110B09	1	M Squared - TV Inspection Sewer Natoma W - Existing Log	TG0404-006	MSQUA902	TURNE361		5/25/11			0	Open
UG3020-333110B10	1	M Squared - TV Inspection Sewer Natoma W - Post Construction Video	TG0404-006	MSQUA902	TURNE361		5/25/11			0	Open
UG3020-333110B11	1	M Squared - TV Inspection Sewer Natoma W - Post Construction Log & Sketch	TG0404-006	MSQUA902	TURNE361		5/25/11			0	Open
UG3020-333110B12	1	M Squared - TV Inspection Sewer Natoma E - Existing Video	TG0404-007	MSQUA902	TURNE361		6/23/11			0	Open
UG3020-333110B13	1	M Squared - TV Inspection Sewer Natoma E - Existing Log	TG0404-007	MSQUA902	TURNE361		6/23/11			0	Open
UG3020-333110B14	1	M Squared - TV Inspection Sewer Natoma E - Post Construction Video	TG0404-007	MSQUA902	TURNE361		6/23/11			0	Open
UG3020-333110B15	1	M Squared - TV Inspection Sewer Natoma E - Post Construction Log & Sketch	TG0404-007	MSQUA902	TURNE361		6/23/11			0	Open

Project Office
175 Beale St
San Francisco, CA 94105
Phone (415) 978-5700 Fax (415) 904-8119

Submittal #	Cycle	Submittal Name	Submittal Package	From Company	To Company	Date Sent	Date Due	Date Returned	Date Sent to Sub	Days Late	Status
Spec Section 33 31 10 (continued)											
UG3030-333110A01	1	TV Inspection Report	TG0405-023	TRINE814	TURNE361	3/25/11	4/12/11	5/03/11	5/05/11	21	No Exceptions Taken
UG3030-333110A01	2	TV Inspection Report	TG0405-023	TRINE814	TURNE361	11/28/11	12/14/11	12/19/11	12/22/11	5	No Exceptions Taken
UG3030-333110A01	3	TV Inspection Report	TG0405-023	TRINE814	TURNE361	2/03/12	2/21/12	2/23/12	2/23/12	2	No Exceptions Taken
Spec Section 33 34 00											
UG3020-333400B02	1	Joint Layout Plan	TG0406-010	MSQUA902	TURNE361	6/10/11	6/28/11	6/28/11	6/28/11	0	Make Corrections Noted
UG3020-333400B02	2	Joint Layout Plan	TG0406-010	MSQUA902	TURNE361	4/13/11	7/01/11	7/01/11	7/01/11	0	Make Corrections Noted
UG3020-333400B02	3	Joint Layout Plan	TG0406-010	MSQUA902	TURNE361	4/13/11	7/21/11	7/21/11	7/21/11	0	Make Corrections Noted
UG3020-333400D01	1	Steel Pipe Material	TG0406-008	MSQUA902	TURNE361	3/30/11	4/15/11	4/22/11	4/22/11	7	Make Corrections Noted
UG3020-333400D01	2	Steel Pipe Material	TG0406-008	MSQUA902	TURNE361	4/28/11	5/16/11	5/13/11	5/13/11	-3	Make Corrections Noted
UG3020-333400D03	1	Pipe Factory Test Results	TG0406-009		TURNE361	5/24/11	6/10/11			0	Pending
Spec Section 33 51 00											
UA3020-335100A01	1	Gas Pipe & Fittings	TG0405-037	TRINE814	TURNE361	1/03/11	1/19/11	1/17/11	1/17/11	-2	Make Corrections Noted
UA3020-335100A02	1	Tracer Wire for Gas Piping in JT	TG0405-037	TRINE814	TURNE361	1/03/11	1/19/11	1/17/11	1/17/11	-2	No Exceptions Taken
Spec Section 33 71 00											
UA3020-337100A08	1	Electrical (PG&E) Conduit, Fittings & Acessories for Joint Trench	TG0405-036	TRINE814	TURNE361	1/03/11	1/19/11	1/18/11	1/18/11	-1	No Exceptions Taken
UA3020-337100A08	2	Electrical (PG&E) Conduit, Fittings & Acessories for Joint Trench	TG0405-036	TRINE814	TURNE361	1/24/11	2/09/11	1/27/11	1/27/11	-13	No Exceptions Taken
UA3020-337100A09	1	Telecommunications (AT&T) Conduit, Fittings & Acessories for Joint Trench	TG0405-036	TRINE814	TURNE361	1/03/11	1/19/11	1/18/11	1/18/11	-1	No Exceptions Taken
UA3020-337100A10	1	EMS Location Devices for JT Utilities	TG0405-036	TRINE814	TURNE361	1/03/11	1/19/11	1/18/11	1/18/11	-1	No Exceptions Taken
UA3020-337100A11	1	Mix Design for Concrete Encasement of PG&E Ducts	TG0405-036	TRINE814	TURNE361	1/03/11	1/19/11	1/18/11	1/18/11	-1	No Exceptions Taken
UA3020-337100A12	1	Underground Conduit Identification for JT Utilities	TG0405-042	TRINE814	TURNE361	1/18/11	2/03/11	1/26/11	1/26/11	-8	No Exceptions Taken
UG3060-337100A01	1	PG&E Qualification Certificates for Plastic Gas Pipe Connections	TG0405-046	TRINE814	TURNE361	2/11/11	3/02/11	2/22/11	2/22/11	-8	For Record Only
UG4010-337100A06	1	Precast vault shop dwgs	TG0405-018	TRINE814	TURNE361	1/06/11	1/24/11	1/21/11	1/21/11	-3	Make Corrections Noted
UG4010-337100A06	2	Precast vault shop dwgs	TG0405-018	TRINE814	TURNE361	2/07/11	2/24/11	2/09/11	2/09/11	-15	Make Corrections Noted
UG4010-337100A08	1	Joint Trench Shop Dwgs - Shaw Alley to AT&T Vault	TG0405-048	TRINE814	TURNE361	3/16/11	4/01/11	3/25/11	3/25/11	-7	Make Corrections Noted
UG4010-337100A09	1	Joint Trench Shop Dwgs - 2nd to PG&E Vault	TG0405-051	TRINE814	TURNE361	3/28/11	4/13/11	4/08/11	4/08/11	-5	Make Corrections Noted

Project Office
175 Beale St
San Francisco, CA 94105
Phone (415) 978-5700 Fax (415) 904-8119

Submittal #	Cycle	Submittal Name	Submittal Package	From Company	To Company	Date Sent	Date Due	Date Returned	Date Sent to Sub	Days Late	Status
Spec Section 33 71 00 (continued)											
UG4010-337100A10	1	Joint Trench Shop Dwgs - Steam Vault to PG&E Vault	TG0405-052	TRINE814	TURNE361	2/13/12	4/12/11	2/13/12	2/13/12	307	Void
UG4010-337100A11	1	Joint Trench Shop Drawings Sta. 3+36 to PGE Vault 1319	TG0405-054	TRINE814	TURNE361	4/18/11	5/04/11	4/27/11	4/27/11	-7	Make Corrections Noted
UG9090-337100A01	1	Mix Design for JT Cap	TG0405-053	TRINE814	TURNE361	3/24/11	4/11/11	4/05/11	4/05/11	-6	No Exceptions Taken
Spec Section 331100											
UG3010-331100B01	1	Catalog Cuts of Pipe & Fittings	TG0434-007	MSQUA902	TURNE361	12/20/10	1/21/11	1/06/11	1/06/11	-15	No Exceptions Taken
UG3010-331100B01	2	Catalog Cuts of Pipe & Fittings	TG0434-007	MSQUA902	TURNE361	1/25/11	2/10/11	1/28/11	1/28/11	-13	No Exceptions Taken
UG3010-331100B02	1	Affadavit of compliance for all material	TG0434-007	MSQUA902	TURNE361	12/20/10	1/21/11	1/06/11	1/06/11	-15	No Exceptions Taken
UG3010-331100B03	1	Polyethelene Encasement	TG0434-007	MSQUA902	TURNE361	12/20/10	1/21/11	1/06/11	1/06/11	-15	No Exceptions Taken
UG3010-331100B04	1	Installation Proceedures	TG0434-007	MSQUA902	TURNE361	12/20/10	1/21/11	1/06/11	1/06/11	-15	No Exceptions Taken
Spec Section 333110											
UG3020-333110A01	1	18" & 24" Main Line VCP	TG0405-001	TRINE814	TURNE361	10/27/10	11/12/10	11/23/10	11/23/10	11	No Exceptions Taken
UG3020-333110A02	1	18" & 24" Main Line VCP Repair Coupling	TG0405-001	TRINE814	TURNE361	10/27/10	11/12/10	11/23/10	11/23/10	11	No Exceptions Taken
UG3020-333110A03	1	VCP Pipe & Fittings for Side Sewers & Culverts	TG0405-001	TRINE814	TURNE361	10/27/10	11/12/10	11/23/10	11/23/10	11	No Exceptions Taken
UG3020-333110A04	1	Couplings for (N) Side Sewer Connections to (E) Pipe	TG0405-001	TRINE814	TURNE361	10/27/10	11/12/10	11/23/10	11/23/10	11	No Exceptions Taken
UG3020-333110A05	1	Tap-Tite Fittings - Side Sewer Connections to Main	TG0405-001	TRINE814	TURNE361	10/27/10	11/12/10	11/23/10	11/23/10	11	No Exceptions Taken
UG3020-333110A06	1	Side Sewer Connection Detail	TG0405-001	TRINE814	TURNE361	10/27/10	11/12/10	11/23/10	11/23/10	11	Make Corrections Noted
UG3020-333110A07	1	Grading Analysis for VCP Pipe Bedding	TG0405-001	TRINE814	TURNE361	10/27/10	11/12/10	11/23/10	11/23/10	11	No Exceptions Taken
UG3020-333110A08	1	Geotextile Fabric for VCP Pipe Bedding	TG0405-001	TRINE814	TURNE361	10/27/10	11/12/10	11/23/10	11/23/10	11	Approved As Noted
UG3020-333110A08	2	Geotextile Fabric for VCP Pipe Bedding	TG0405-001	TRINE814	TURNE361	11/30/10	12/16/10	12/03/10	12/06/10	-13	Approved As Noted
UG3020-333110A09	1	Precast Manhole Materials	TG0405-001	TRINE814	TURNE361	10/27/10	11/12/10	11/23/10	11/23/10	11	Make Corrections Noted
UG3020-333110A09	2	Precast Manhole Materials	TG0405-001	TRINE814	TURNE361	11/30/10	12/16/10	12/06/10	12/06/10	-10	Make Corrections Noted
UG3020-333110A09	3	Precast Manhole Materials	TG0405-001	TRINE814	TURNE361	12/06/10	12/22/10	12/10/10	12/10/10	-12	Make Corrections Noted
UG3020-333110A10	1	Manhole Frame & Cover	TG0405-001	TRINE814	TURNE361	10/27/10	11/12/10	11/23/10	11/23/10	11	No Exceptions Taken
UG3020-333110A11	1	Precast Catch Basin	TG0405-001	TRINE814	TURNE361	10/27/10	11/12/10	11/23/10	11/23/10	11	No Exceptions Taken
UG3020-333110A12	1	Catch Basin Frame & Cover	TG0405-001	TRINE814	TURNE361	10/27/10	11/12/10	11/23/10	11/23/10	11	Make Corrections Noted
UG3020-333110A13	1	Cast Iron Trap for Catch Basin	TG0405-001	TRINE814	TURNE361	10/27/10	11/12/10	11/23/10	11/23/10	11	No Exceptions Taken
UG3020-333110A14	1	Plug for Catch Basin Trap	TG0405-001	TRINE814	TURNE361	10/27/10	11/12/10	11/23/10	11/23/10	11	No Exceptions Taken
UG3020-333110A16	1	Water Stop for CIP Manholes Structures on First St	TG0405-014	TRINE814	TURNE361	11/11/10	11/29/10	11/29/10	11/29/10	0	No Exceptions Taken

Project Office
175 Beale St
San Francisco, CA 94105
Phone (415) 978-5700 Fax (415) 904-8119

Submittal #	Cycle	Submittal Name	Submittal Package	From Company	To Company	Date Sent	Date Due	Date Returned	Date Sent to Sub	Days Late	Status
Spec Section 333110 (continued)											
UG3020-333110A17	1	Form Ties for CIP Manholes Structures on First St	TG0405-014	TRINE814	TURNE361	11/11/10	11/29/10	11/29/10	11/29/10	0	No Exceptions Taken
UG3020-333110A18	1	Form Release Agent for CIP Manholes Structures on First St	TG0405-014	TRINE814	TURNE361	11/11/10	11/29/10	11/29/10	11/29/10	0	No Exceptions Taken
UG3020-333110A19	1	Concrete Curing Compound for CIP Manholes Structures on First St	TG0405-014	TRINE814	TURNE361	11/11/10	11/29/10	11/29/10	11/29/10	0	No Exceptions Taken
UG3020-333110A19	2	Concrete Curing Compound for CIP Manholes Structures on First St	TG0405-014	TRINE814	TURNE361	12/01/10	12/17/10	12/10/10	12/10/10	-7	No Exceptions Taken
UG3020-333110A20	1	Elastomeric Bearing Pad for CIP Manhole Pipe Joints on First St.	TG0405-014	TRINE814	TURNE361	11/11/10	11/29/10	11/29/10	11/29/10	0	No Exceptions Taken
UG3020-333110A20	2	Elastomeric Bearing Pad for CIP Manhole Pipe Joints on First St.	TG0405-014	TRINE814	TURNE361	12/01/10	12/17/10	12/10/10	12/10/10	-7	No Exceptions Taken
UG3020-333110A21	1	Joint Sealant for CIP Manhole Pipe Joints on First St.	TG0405-014	TRINE814	TURNE361	11/11/10	11/29/10	11/29/10	11/29/10	0	No Exceptions Taken
UG3020-333110A21	2	Joint Sealant for CIP Manhole Pipe Joints on First St.	TG0405-014	TRINE814	TURNE361	12/01/10	12/17/10	12/10/10	12/10/10	-7	No Exceptions Taken
UG3020-333110A23	1	Grading Analysis for Alt VCP Pipe Bedding	TG0405-045	TRINE814	TURNE361	5/10/11	5/26/11	5/26/11	6/03/11	0	Rejected
UG3020-333110B01	1	Vitrified Clay Pipe	TG0404-001	MSQUA902	TURNE361	12/20/10	1/10/11	12/30/10	1/03/11	-11	No Exceptions Taken
UG3020-333110B02	1	Cast Iron Trap & Cap for Catch Basins	TG0404-001	MSQUA902	TURNE361	12/20/10	1/10/11	12/30/10	1/03/11	-11	No Exceptions Taken
UG3020-333110B03	1	Side Sewer Connection Detail	TG0404-001	MSQUA902	TURNE361	12/20/10	1/10/11	12/30/10	1/03/11	-11	No Exceptions Taken
UG3020-333110B04	1	Sewer Material Test Reports	TG0404-001	MSQUA902	TURNE361	12/20/10	1/10/11	12/30/10	1/03/11	-11	No Exceptions Taken
UG3020-333110B05	1	Sewer Material Shop drawings & literature	TG0404-001	MSQUA902	TURNE361	12/20/10	1/10/11	12/30/10	1/03/11	-11	No Exceptions Taken
UG3020-333110B06	1	Sewer Material Manufaturer's Warranty's	TG0404-001	MSQUA902	TURNE361	12/20/10	1/10/11	12/30/10	1/03/11	-11	No Exceptions Taken
UG3020-333110B07	1	Wet Spray Mortar	TG0404-001	MSQUA902	TURNE361	12/20/10	1/10/11	12/30/10	1/03/11	-11	No Exceptions Taken
Spec Section 337100											
UG4020-337100A01	1	Rigid Steel Conduit & Fittings	TG0405-005	TRINE814	TURNE361	10/29/10	11/16/10	11/23/10	11/23/10	7	No Exceptions Taken
UG4020-337100A02	1	Grounding Bushing for Rigid Conduit	TG0405-005	TRINE814	TURNE361	10/29/10	11/16/10	11/23/10	11/23/10	7	No Exceptions Taken
UG4020-337100A03	1	Street Lighting Pull Box for Vehicular Trafficed Areas (H20)	TG0405-005	TRINE814	TURNE361	10/29/10	11/16/10	11/23/10	11/23/10	7	No Exceptions Taken
UG4020-337100A04	1	Street Lighting Pull Box for Sidewalk (Non Traffic)	TG0405-005	TRINE814	TURNE361	10/29/10	11/16/10	11/23/10	11/23/10	7	No Exceptions Taken
UG4020-337100A05	1	Copper Wire Conductors	TG0405-005	TRINE814	TURNE361	10/29/10	11/16/10	11/23/10	11/23/10	7	Make Corrections Noted
UG4020-337100A06	1	In-Line Fuseholders	TG0405-005	TRINE814	TURNE361	10/29/10	11/16/10	11/23/10	11/23/10	7	No Exceptions Taken
UG4020-337100A07	1	Time-Delay Fuses	TG0405-005	TRINE814	TURNE361	10/29/10	11/16/10	11/23/10	11/23/10	7	No Exceptions Taken
Spec Section 337117											
UG4030-337117	1	Temporary Poles	TG0406-013	MSQUA902	TURNE361	4/18/11	5/04/11	5/17/11	5/17/11	13	No Exceptions Taken
UG4030-337117	2	Temporary Poles	TG0406-013	MSQUA902	TURNE361	5/19/11	6/07/11	5/23/11	5/23/11	-15	No Exceptions Taken
UG4030-337117B01	1	Temporary Pole Layout	TG0406-014	MSQUA902	TURNE361	5/06/11	5/24/11	5/13/11	5/13/11	-11	Make Corrections Noted

Submittal Log

Project 30100 - Transbay Transit Center Project

Project Office
175 Beale St
San Francisco, CA 94105
Phone (415) 978-5700 Fax (415) 904-8119

Submittal #	Cycle	Submittal Name	Submittal Package	From Company	To Company	Date Sent	Date Due	Date Returned	Date Sent to Sub	Days Late	Status
Spec Section 337900											
UG4020-337900A01	1	Copper Bonded Ground Rods	TG0405-006	TRINE814	TURNE361	10/29/10	11/16/10	11/18/10	11/18/10	2	No Exceptions Taken
UG4020-337900A02	1	Ground Wire Clamp	TG0405-006	TRINE814	TURNE361	10/29/10	11/16/10	11/18/10	11/18/10	2	No Exceptions Taken
UG4020-337900A03	1	Grounding Conductor	TG0405-006	TRINE814	TURNE361	10/29/10	11/16/10	11/18/10	11/18/10	2	No Exceptions Taken
Spec Section 610											
UA0000-000610B02	1	P&P Bonds	TG0401-001	MSQUA902	TURNE361	2/01/11	2/01/11	2/03/11	2/04/11	2	For Record Only
Spec Section 805											
UA0000-000805B02	1	Certificate of Insurance	TG0401-001	MSQUA902	TURNE361	2/01/11	2/01/11	2/03/11	2/04/11	2	For Record Only
Spec Section 820											
UA0000-000820B01	1	City Build Workforce Projection	TG0434-014	MSQUA902	TURNE361	12/20/10	1/21/11	1/05/11	1/05/11	-16	Make Corrections Noted
UA0000-000820B01	2	City Build Workforce Projection	TG0434-014	MSQUA902	TURNE361	1/24/11	2/09/11	1/24/11	1/24/11	-16	Make Corrections Noted
UA0000-000820B01	3	City Build Workforce Projection	TG0434-014	MSQUA902	TURNE361	2/07/11	2/24/11	2/11/11	2/11/11	-13	Make Corrections Noted
UA0000-000820C01	1	City Build Workforce Projection	TG0401-004	MSQUA902	TURNE361	2/25/11	3/15/11	3/03/11	3/03/11	-12	No Exceptions Taken

Document Control

January 13, 2011

Purpose

The purpose of this outline is to provide guidelines for establishing the appropriate document control system for the management of the Transbay Transit Center project.

Policy

All Controlled documents will go through Document Control to be logged and tracked.

Procedures

What is a controlled document? A controlled document shall be defined for this project as any contract document or correspondence which includes i) contract requirements, or ii) scope definition or requirements, including distribution of all Contract Documents (e.g. addendum, bulletins, work orders, etc.) either to/from TJPA or Trade Subcontractor. Controlled documents received should be date stamped, logged, saved electronically (in some cases hard copies filed), distributed internally, monitoring response/process time (also referred to as work flow), distribute externally, and track the distribution list.

The following is a list of **controlled document** examples:

- Project Document Distribution – Internal/External
    - Design Documents
    - Construction Document
    - Sketches
    - Reference Documents
- Submittals, including all LEED submittal requirements and substitutions.
- Design Review Questions (DRQs) - Preconstruction
- Request for Information (RFIs) - Construction
- Daily Reports
- Safety Memos – Logged and tracked
- Schedules and schedule reports
- Permit Inspections
- Payment Applications
- Cash Flow Projections
- Monthly Progress Reports
- Permits
- Original Documents - Custodianship of all original documents in a Master File until they can be boxed and transferred for long term storage.
- Formal Correspondence; including all formal incoming/outgoing correspondence
- Contract Notification Correspondence; delay notification, etc.

- Contract Modifications
- Virtual Building/Models
- Meeting Minutes
- Transmittals
- Requests for Qualification (RFQ)
- Invitation for Bid (IFB)
- Subcontracts & Change Orders
- Long Form/Short Form Purchase Orders (PO)
- SBE/DBE
- Closeout documents
- Reimbursements

Uncontrolled Documents: The following are some examples of uncontrolled documents:
- Email correspondence
- Field Tags – Collected and tracked by Cost Control
- Purchase Order – Managed by Procurement/Cost Control

File Naming Conventions

November 4, 2010

Naming Convention

Below is the designator and associated description to be used on correspondence for the Transbay Project.-Project examples are:

1. RFI
    a. Utilities
        i. RFI U -XXXX – Description
    b. Transit Center Building
        i. RFI T-XXXX – Description
    c. Bus Ramps
        i. RFI B-XXXX – Description

    Ex. RFI U-0083 – Joint Trench Conflict on Minna at St. 5+5

2. Submittal
    a. Utilities
        i. **U**uniformat-masterformat-subcontract##
            1. Ex. UA0000-000000A01 – Description
    b. Transit Center Building
        i. **T**uniformat-masterformat-subcontract##
            1. TA0000-000000A01 – Description
    c. Bus Ramps
        i. **B**uniformat-masterformat-subcontract##
            1. BA0000-000000A01 – Description

    Ex. UG3020-333100A01 – Sewer Piping Material

3. Email
    a. Subject: Subject Description, same description to be used in transmittal, CMiC, etc
        i. If communication pertains to a Trade Group – Subject should include TG##.# and Name

    Ex. Change Request T-003 – Shoring Wall Changes [30100.03]
    Ex. Transbay Transit Center - TG05.4 – Reimbursable Expense Approval [30100.01]

4. Dated Materials – meetings, correspondence, reports, project documents, etc…
    a. YYYY-MM-DD-Description

    Ex. 2011-05-28 – TG03 Reimbursable Expense Approval

Exhibit J

Contracts (CMiC) –

b. Number = Contract #
c. Title = Subcontractor Name EXECUTED Contract # Date

Ex. 301000405
Ex. Trinet Construction Inc. EXECUTED 301000405 2010-10-22

5. Change Orders (CMiC) -
   a. Number = Contract # - ###
   b. Title = Subcontractor Name EXECUTED SCO# Date

Ex. 301000405-001
Ex. Trinet Construction EXECUTED SCO#001 2010-10-05

Filing Archive

January 7, 2011

Purpose

To define which documents need to be saved, where they need to be saved and who is responsible for ensuring they are properly saved.

Policy

All documents relative to the project should be saved electronically. In some cases, hard copies of these documents will also be saved.

Procedure

Do not save project related files on your individual computer.

- There is no back-up for these files. Computers can be stolen or crash in which case all information on that computer is lost.
- If someone else needs to access the most updated document, they cannot do so.
- If you have to work off-line, make a copy of your file from the server, do your update and then copy it back to the server once you have access.

Hardcopies –
A central document control location is established in the office. This location will be the storage for all documents that require hard copy. The following Hard Copy documents shall be filed:

- Prime Contract
- Prime Contract Change Orders (Contract Change Orders (CCO))
- Contract Amendments
- Executed Subcontracts
- Executed Subcontract Change Orders
- Permits

Electronic Copies
ALL Documents involved with the project will be stored electronically.

File Folder Structure

All electronic documents must be filed electronically

Exhibit J

There are eight (8) folders in the first level of documents on the Transbay. No changes to this level of folders are allowed unless specifically discussed with a Project Director. No individual files should be stored at this level.

At the level Transbay\TJPA – OWNER*folder name* there are currently 26 folders. Some have folder stored in these folders.

No changes can be made to the folder structure at this level unless discussed with a Senior Project Manager. No individual files should be stored at this level. Where applicable, folder names at this level will include, in parenthesis, the party responsible for maintenance of the file structure.

All folders will have names that accurately describe the comments. No folder will be named "miscellaneous documents" or any similar non-descriptive name.

Standard File Naming Conventions

ALL electronic document files and folders stored shall have titles consistent with the naming conventions defined in the File Naming Convention policy and procedure.

Responsible Party

The responsible party for each document is indicated in the matrix below. If the document is a paper copy, the responsible party shall hand the task of physically filing the document to the document control team. If a document is to be filed electronically, the responsible party shall see that it is filed correctly.

Filing Archive

January 7, 2011

Document Matrix

DOCUMENT TYPE	HARD COPY?	SOFT COPY?	Responsible Party	Where Stored
OWNER				
Prime Contract	Yes	Yes	Senior PA	Hard copy: Central File Location Soft copy: Contract
Prime Contract Change Orders	Yes	Yes	Senior PA	Hard copy: Central File Location Soft copy: Contract Amendments
Prime Contract Notices to Proceed	No	Yes	Senior PA	Hard copy: NA Soft copy: Contract NTPs
Owner Billing	No	Yes	Project Accountant	Hard Copy: NA Soft Copy: Progress Billings
SUBCONTRACT				
Subcontract	Yes*	Yes	PA	Hard Copy: Central File Location Soft Copy: Contract & SCCO's
Subcontract Change Order	Yes*	Yes	PA	Hard Copy: Central File Location – Subcontractor file Soft Copy : Contract & SCCO's
Subcontractor Insurance Cert	Yes*	Yes	Project Accountant	Hard Copy: Central File Location – Subcontractor File Soft Copy: Insurance Certificates
Subcontractor Progress Billing	No	Yes	Project Accountant	Hard Copy: NA Soft Copy: Progress Billings
Subcontractor Pricing	No**	Yes	APM	Hard Copy: NA Soft Copy: CMiC attached to issue code
Subcontractor direction to proceed	No**	Yes	APM	Hard Copy: NA Soft Copy: CMiC attached to issue code
Subcontractor Field Work Tag	No**	Yes	APM	Hard Copy: NA Soft Copy: CMiC attached to issue code
Subcontractor Formal Corres. (to)	No	Yes	PA	Hard Copy: Central File Location – Subcontractor File Soft Copy: *trade number & name\Subcontractor* 3. Correspondence
Subcontractor Formal Corres. (from)	No	Yes	PA	Hard Copy: Central File Location – Subcontractor File Soft Copy: Correspondence
Long Form P.O.	See SC	See SC	See SC	Long Form P.O.'s will be filed in the same manner as subcontracts.
Subcontract Pre-lien info.	Yes	Yes	Project Accountant	Hard Copy: Central File Location – Subcontractor File Soft Copy: Preliminary Notices

Exhibit J

Filing Archive

January 7, 2011

DOCUMENT TYPE	HARD COPY?	SOFT COPY?	Responsible Party	Where Stored
CONSTRUCTION				
RFI	No	Yes	Project Engineer	Hard Copy: Binder located at the foreman's plan table Soft Copy: CMiC
Submittals – Product Data	No	Yes	Project Engineer	Hard Copy: NA Soft Copy: APPROVAL SHEET MUST BE SCANNED IN COLOR. CMiC
Submittals – shop drawings	No	Yes	Project Engineer	Hard Copy: Central File Location Soft Copy: APPROVAL SHEET MUST BE SCANNED IN COLOR. Copy of approval to CMiC
Submittals – samples	Yes	Yes ++	Project Engineer	Hard Copy: Central Sample Location Soft Copy: APPROVAL SHEET MUST BE SCANNED IN COLOR. Copy of approval to CMiC
Daily Reports W/O	No	Yes	Supt.	Hard Copy: NA Soft Copy: CMiC / Constructware
Daily Reports Subcontractors	No	Yes	Project Engineer	Hard Copy: Central File Location Soft Copy: Daily Reports*subcontractor*
CQC Daily Reports	No	Yes	CQC Manager	Soft Copy: CMiC/Constructware
TPoC Meeting Minutes	No	Yes	CQC Manager	Soft Copy: CMiC
Non Conformance	No	Yes	CQC Manager	Soft Copy: CMiC
Progress Photos	No	Yes	Assistant Supt	Hard Copy: NA Soft Copy: Daily Progress Photos
Drawing Issuances	Yes	Yes	Document Control	Hard Copy: Central File Location Soft Copy: Documents
Meeting Minutes	No	Yes	Minutes Author	Hard Copy: NA Soft Copy: CMiC

Transmittals

November 29, 2010

Purpose

To ensure contract documents leaving this office have a record.

Policy

Use and receipt of Transmittals is governed by the information herein.
All contract document exchange with Ownership, Design Team, Subcontractor community and Agencies with Jurisdiction/Authority on the project requires a CMiC transmittal. All transmittals are created in CMiC with the reference documents listed and uploaded as attachments in CMiC. All transmittals with incoming documents are date stamped, scanned and uploaded with the documents to the pertinent folder and CMiC.

Below is a listing of all contract documents that require a transmittal to capture the exchange/submission:

- Billing
- Submittals
- Design Review reports
- Schedules & Reports
- Cost Estimates
- Drawings
- Close-out documents
- Attic Stock

Procedure

Transmittal tracking numbers are auto populated in CMiC.

Subject (RE): The subject should be the same description used on other documents (ex. PCI's, Letters, e-mail, etc.) Subject should be descriptive and should include appropriate sub-job, TG Package # and description.

Remarks: Include in the remarks form the first sentence should read

RE: Transbay Transit Center [Preconstruction/TCB/Utilities/Bus Ramps select one] – 30100.[##}

CMiC

Generating a Transmittal in CMiC requires completion of the following input:

- From, To and CC individuals.
- Re: is the same as subject
- Via
- Due date(if applicable)
- Actions as appropriate
- Remarks (Do not list transmittal items in this section)
- Individual Transmittal Item listing including quantity, date, reference, description, comment and status stamp and initial all incoming document cover pages.

Linking Documents to CMiC

All documents being transmitted should be uploaded to CMiC under the appropriate folder under "documents".

If there is not a specific folder the type of document being transmitted, include it in "Webcor Other Attachments".

Reference Naming Convention P&P for naming of linked documents.

Sending Documents to Ownership

All documents will be sent via ConstructWare by the Document Control team.

Distribution Matrix

November 18, 2011

Purpose

To establish guidelines for who receives what documents and in what form.

Policy

All documents received by Document Control will be distributed according to the matrices.

Procedure

Distribution Matrices have been established for:

1. Internal & Drawing Distribution
2. External Distribution
3. Inspection Distribution

Exhibit J

Transbay Internal Drawing Distribution Matrix 3/28/2012

Key

H = Half Size
F = Full Size
empty = Electronic

Group	Name	Trade Specific Correspondence						
		Transit Center Bldg 30100.01				**Utility Relocation - 30100.03**	**Bus Ramps - 30100.05**	
		TG03	**TG05**	**TG08**	**TG19**			
		Drawings						
Group	**Name**	**Specifications**						
	Hidetake Taniguchi						H	
	Richard Gangitano							
	Brian Morton							
	Todd Mercer							
	Kurt Ricci	H		H				
CONTROLS	Ted Williams							
DOCUMENT CTRL	Avaline Feliciano	F	F	F	F	F	F	Printed from DSM
QUALITY CTRL	Robert Garcia							
	Lynn Kowallis							
	David Hungerford							
TRANSIT CENTER BLDG 30100.01	Kirk Nielsen	H						
	Joanne Filipas							
	Mike Poole	H						
	Pat Griffin							
	Jim Tomaszewski							
	Manny Saldana							
	David Fields							
	Jeff Heath			H				
UTILITY RELOCATION 30100.03	Colin Azevedo				H	H		
BUS RAMPS 30100.05	Masashi Kojima						H	

Date	Revision #
3/28/2012	4

F:\Transbay\WEBCOR\Document Control (Joanne & Manny)\Procedures\Working Files\4.0 DOCUMENT CONTROL\42 Distribution Matrix\Drawing Distribution MatrixRev4.xlsx

Exhibit J

TRANSBAY TRANSIT CENTER
DISTRIBUTION MATRIX
WEBCOR/OBAYASHI
External

P = Primary
CC = Copy

		General Correspondence									Trade Specific Correspondence						Purchasing		Engineering
											Transit Center Bldg 30100.01								
Group	**Name**	**Contract Issues**	**Amendments/CO**	**Progress Billings**	**Schedule Updates**	**NOPD/NOPC**	**Quality**	**Safety**	**Cost Estimating/Constructability**	**Field Orders/PCO**	**TG03**	**TG05**	**TG08**	**TG19**	**Utility Relocation - 30100.03**	**Bus Ramps - 30100.05**	**Bid Packages and Coorespondence**	**QBDs**	**RFI's and Submittals**
Turner	Steve Rule	cc	cc	cc	**P**	**P**	cc	cc	cc	cc	cc	**P**	**P**	**P**	**P**	**P**	**P**	cc	
	Jack Adams				cc	cc	cc	**P**			cc	cc	cc	cc	cc	cc			
	Saeid Elmi						**P**												cc
	Gwynne Powell	cc	**P**	**P**	cc	cc				**P**									
	Gary Krutsch										cc	cc	cc	cc	cc	cc	cc	**P**	**P**
	Kevin Chiu										cc							cc	cc
	Steve Cunningham				cc	cc		cc			cc				cc				
	Turner Doccontrol	cc	cc	cc	cc	cc	cc	cc	cc	cc	cc	cc	cc	cc	cc	cc	cc	cc	cc
PMPC	Emilio Cruz	cc	cc		cc	cc													
	Steve Perreault	cc	cc	cc	cc	cc			cc	cc									
	Jim Coughlin		cc		cc	cc			**P**	cc									
	Jason Partin				cc	cc													
	Alfred Lau	cc	cc				cc	cc	cc	cc	cc	cc	cc	cc	cc	cc			
	Mark O'Dell								cc	cc			cc						
	Guy Hollins														cc				
	Phil Sandri													cc		cc			
	Prasad Nimmigadda								cc										
	Whitney Campbell						cc												
	Roger Rothenburger										cc								
	Doug Jacobson										cc								
	PMPC DocControl	cc	cc	cc	cc	cc	cc	cc	cc	cc	cc	cc	cc	cc	cc	cc	cc	cc	cc
TJPA	Bob Beck					cc													
	Brian Dykes					cc					**P**								
	*TJPA DocControl	cc	cc	cc	cc	cc	cc	cc	cc	cc	cc	cc	cc	cc	cc	cc	cc	cc	cc

*All correspondence for TJPA will be sent to Doc. Control and will direct correspondence for action, information, etc.

Internal Distribution Matrix Rev7.xlsx

P = Primary
cc = copy

Group	Name	General Correspondence							Trade Specific Correspondence						
									Transit Center Bldg						
		Contract Issues	Amendments/CO	Progress Billings	Schedule	Quality	Safety	Pre Construction	TG03-BSE	TG05-Logistics	TG08-Glazing	TG019-301 Mission Wall	TG06-Below Grade	Utility Relocation - 30100.03	Bus Ramps - 30100.05
		All Correspondence							Field Orders						
									Submittals						
									Inspections						
									RFI's						
									PCO's						
MANAGEMENT	Jes Pedersen	cc													
	Hidetake Taniguchi	cc	cc	cc	cc	cc	cc	cc	cc						cc
	Richard Gangitano	P	P		cc	cc	cc		cc	cc	cc	cc	cc	cc	cc
	Brian Morton	cc	cc		cc	cc	cc		cc	cc	cc	cc	cc	cc	cc
	Todd Mercer	cc	cc	P		cc	cc	P				cc			cc
	Kurt Ricci	cc	cc	cc	cc	cc	cc	cc	cc	cc	cc	cc	cc	cc	cc
PROJECT ACCT	Jasmin Lautt		cc	cc											
ADMIN	Sarah Boyd			cc											
	Julie O'Brien		cc												
Controls	Ted Williams	cc	cc	cc					cc	cc	cc	cc	cc	cc	cc
DOCUMENT CTRL	Avaline Feliciano	cc	cc	cc	cc	cc	cc	cc	cc	cc	cc	cc	cc	cc	cc
SAFETY	Ray Ramierez						P								
QUALITY CTRL	Bob Garcia					P		cc	cc	cc	cc	cc	cc	cc	cc
	Lynn Kowallis					cc		cc	cc	cc	cc	cc	cc	cc	cc
SCHEDULING	David Hungerford				P			cc				P			
Virtual Building	Frank Haase				cc			cc							
	Mike Brown				cc			cc							
TRANSIT CENTER BLDG 30100.01	Kirk Nielsen								P						
	Mike Poole								cc			cc	cc	cc	
	Joanne Filipas								cc						
	David Fields								cc						
	Pat Griffin								cc						
	Jim Tomaszewski								cc						
	Chad Matthews								cc						
	Brian Perez								cc						
	Jeff Heath							cc			P		P		cc

Internal Distribution Matrix Rev7.xlsx

P = Primary
cc = copy

		General Correspondence							Trade Specific Correspondence						
									Transit Center Bldg						
		Contract Issues	Amendments/CO	Progress Billings	Schedule	Quality	Safety	Pre Construction	TG03-BSE	TG05-Logistics	TG08-Glazing	TG019-301 Mission Wall	TG06-Below Grade	Utility Relocation - 30100.03	Bus Ramps - 30100.05
		All Correspondence							Field Orders						
									Submittals						
									Inspections						
									RFI's						
Group	**Name**								PCO's						
	Jodi Soboll							cc					**cc**		
	Manny Saldana								cc	**P**				cc	
	Nhi Tran							cc					cc		
	Tomoya Imai							cc							
	Sihaya Roselle							cc		cc			cc		
UTILITY RELOCATION 30100.03	Colin Azevedo									cc				**P**	
BUS RAMPS 30100.05	Masashi Kojima							cc					cc		**P**

Design Documents

January 10, 2011

Purpose

To receive, review and distribute design documents sent to W/O from TJPA.

Policy

All design documents will go through document control and be distributed electronically to the entire team. Only selective members of the team will receive hard copies.

Procedure

1. Document Control Engineer (DCE) receives design documents from TJPA via Hard copy, compact disc, electronically or download from ConstructWare.
2. DCE reviews documents for completeness.
    a. If documents received are incomplete, DCE responds immediately via e-mail indicating the documents are incomplete and W/O is not reviewing them.
3. DCE creates a new folder in the Owner-Documents folder for the received file.
4. DCE distributes link to electronic file
5. DCE determines drawing order requirements for Ford Graphics.
    a. DCE to follow PO procedure for ordering drawings (see PO procedure).
6. DCE places order once the PO is approved by the Project Director.
7. DCE receives drawing order and verifies it is complete.
8. DCE distributes hard copy design documents to the appropriate personnel.

Master Project Document Log

January 18, 2011

Purpose

To track and document all drawings and specifications issued throughout the life of the project and where these documents live.

Policy

The master project document log will be update by Document Control as new drawings and specifications are issued.

Procedure

1. Review master drawing log against drawing log issued with new drawings.
2. Update master drawing log when new documents are received with date, revision number and location of where documents are saved.

NOTE – Master Drawing Log has not been established; PMPC to issue master log.

Updating Drawings & Specs

January 10, 2011

Purpose

To ensure there is an up to date record set of drawings and specifications.

Policy

All drawings and specifications will be updated and maintained by the project team and document control. Individual team members are responsible for keeping their personal drawings up to date.

Procedure

Specifications and Drawings will be kept both electronically and in hard copy. Document Set Manager will be the most up to date set of Record Drawings only.

Record Drawings:

1. Document Control Engineer (DCE) receives new drawings from TJPA
    a. DCE follows Design Document procedure for distribution.
2. DCE batch plots DWG files in AutoCad to the DSM file.
    a. Reviews batch plot PDF's against the PDF's provided by TJPA for changes.
3. DCE imports PDF's to DSM.
4. DCE closes clouds for RFI's that have been captured by the Architect.
5. DCE notifies the team that the new drawings are in DSM and comparisons can be done.
6. DCM will print full size hard copies of record set drawing as required. Subcontractors and Project Team should reference DSM for the most up to date Record Set.
7. DCE updates Construction Drawings to fold in new drawings.

**All RFI's (sent and answered) will be posted to drawings by the author of the RFI. (See RFI procedure).

Specifications:

1. DCE receives revised specifications from TJPA
    a. DCE follows Design Document procedure for distribution.
2. DCE takes hard copies received from TJPA and updates Record Set of specifications.
3. DCE Updates electronic version of current specs.

Exhibit J

Document Set Manager

January 26, 2011

Purpose

Document Set Manager (DSM) will be utilized on this project to manage our record set of drawings.

Policy

DSM will be used as Webcor/Obayashi's record set of drawings, including all RFI's, Trade Subcontractor As-builts and revisions to drawings. Specifications will not be maintained in DSM.

Exhibit J

CQC File Structure

November 16, 2011

Purpose

The CQC File Structure is outlined below and will be utilized on this project to store, organize and manage Webcor/Obayashi's CQC Plan, Daily CQC Reports and DFOWs.

Policy

Webcor/Obayashi will organize and store CQC documents such as the CQC Plan, Daily CQC Reports and DFOWs on the F:\ drive in a shared folder. CQC Daily Reports will be uploaded into Constructware as the system of record.

Procedure

CQC documents on the F:\ drive may be found at the following location.

F:\Transbay\WEBCOR\Quality Control

CQC Plans

- CQC Plan Webcor-Obayashi JV:

Daily CQC Reports

- 1. Trinet
- 2. M2
- 3. Transworld
- 4. M2
- 5. BBII
- 6. Chaudry
- 7. Sandis
- 8. Webcor-Obayashi

DFOW

- BBII (TG03)
    - Preparatory Phase
    - Initial Phase
    - Follow-up Phase
- M2 (TG04.1, 04.2, 04.3, 04.4, 04.5, 04.6)

CQC Daily Reports in Constructware may be found at the following location.

Constructware CQC Daily Reports

140 - Transit Center Building

- File Director
    - 10 Quality
        - 12 CQC Reports
            - BBII
            - W-O

Exhibit J

5. INSPECTIONS AND TESTING

5. INSPECTIONS AND TESTING

GENERAL

QUALITY INSPECTIONS

The Webcor/Obayashi JV Quality Control Manager or CQC Manager's alternate will verify that Trade Subcontractors are meeting the requirements outlined in the TJPA Quality Management System Manual, sections 8.5.1 Inspection and Test Planning and 8.5.2 Contractor Inspection Requirements, to provide documented evidence of inspections, lab reports and test results. When specified, the Trade Subcontractors will also perform inspections of all purchased items, perform source inspections, perform first article inspections and perform end process inspections and testing.

INDEPENDENT TESTING FIRM REPORTING REQUIREMENTS

When the technical specifications indicate the requirement for services of an independent firm, inspection reports will be submitted promptly by the independent firm in triplicate and distributed, one copy each, to the TJPA Representative, Webcor/Obayashi JV, and the code authority having jurisdiction over the Project and will indicate observations and results of tests and compliance or noncompliance with the requirements as defined in the technical specifications.

TJPA CODE AND AGENCY TESTING AND INSPECTIONS

When specified, work shall be subject to inspection by representatives of the TJPA and other agencies having jurisdiction (Code and Agency Inspections) to assure compliance with all requirements of Section 00 07 00, General Conditions, Paragraph 8.02.

TJPA SPECIAL INSPECTION AND TESTING

The TJPA shall include as part the Construction Management Oversight Consultant's scope, all specified tests to verify that the Work conforms to the requirements of the Contract Documents and to the Quality Control specification, specifically to specification section 01 14 00 Rev 0 Quality Control paragraph 1.5A Tests, and will include the following procedures:

- Verify that testing procedures comply with the contract documents.
- Implement and document control verification and acceptance testing procedures.
- Check testing instruments calibration data against certified standards.
- Promptly submit copies of test reports to: TJPA, Webcor/Obayashi JV and the code authority having jurisdiction over the Project

INSPECTION REQUEST PROCEDURE

The Trade Subcontractors CQC Manager will verify that all prerequisites as defined by the contract specifications are completed prior to Code, Agency or Special Inspections. Inspection Request will be submitted to the Webcor/Obayashi JV CQC Manager and the TJPA Construction Management Oversight Manager 48 hours and not more than 72 hours prior to the inspection date. Inspection Requests for Code, Agency and Special Inspections require an "Inspection Request Form" (TJPA provided form) to be completed by Webcor/Obayashi JV or the Trade Subcontractors CQC Manager. The Trade Subcontractor's CQC Manager will facilitate onsite inspections, sampling procedures, test reports, and provide notification to the Webcor/Obayashi JV CQC Manager and TJPA representative when inspections fail or test results fall below specified values.

TRADE SUBCONTRACTOR TESTING AND INSPECTION

TEST AND INSPECTION PROCEDURES BY TRADE SUBCONTRACTORS

When required in the technical specifications, the Trade Subcontractors shall include as part of their scope all tests to verify that the Work conforms to the Contract Documents and to the Quality Control specification section 01 14 00 Rev 0 paragraph 1.10A Tests, and will include the following procedures:

- Verify that testing procedures comply with the contract documents.
- Verify that all inspection prerequisites are met prior to conducting inspections.
- Submit a testing and inspection matrix with the design submittals showing all required inspections and the entity responsible for performing the tests or inspections.
- Track inspection and test status.
- Verify that the facilities and testing equipment are available and comply with the testing standards.
- Trade Contractors and Suppliers shall have documented procedures to ensure test equipment is in calibration and keep updated lists of all equipment requiring calibration. Trade Contractor shall make calibration records available for review.
- Record results of tests taken, both passing and failing on the trade subcontractor's daily CQC report for the date taken. Specify paragraph reference, location where tests were taken.
- When the services of an independent firm are utilized, reports will be submitted promptly by the independent firm in triplicate and distributed, one copy each, for the TJPA Representative, Webcor/Obayashi JV, and the code authority having jurisdiction over the Project and will indicate observations and results of tests and compliance or noncompliance with the Contract.

- When specified, the Trade Subcontractors shall produce test and inspection plans in accordance with the Program Quality Management System requirements. All testing and measurements specified to be performed by the Trade Subcontractors shall be performed with equipment whose calibration meets national standards and to documented standards when no national standard exists.
- Maintain and submit a log indicating the status of the Trade Subcontractors inspections and tests.

CONTROL VERIFICATION AND ACCEPTANCE TESTING PROCEDURES

When specified, The Trade Subcontractors CQC Managers will provide control, verification, and acceptance testing procedures for each specific test to include the test name, specification paragraph requiring test, feature of work to be tested, test frequency, and person responsible for each test. (Laboratory facilities approved by the TJPA Representative must be used.).

When specified, specific control verification and acceptance testing procedures will be provided by the Trade Subcontractors as part of the Trade Subcontractors CQC plans, and will be completed as the specification sections are defined and the Trade Subcontractors are added to the project.

TEST REPORTING

Inspection and test status are documented in the Trade Subcontractors Daily Quality Control reports.

COMPLETION INSPECTIONS

PUNCH-OUT INSPECTION

An inspection of the Work will be conducted by the Trade Subcontractors CQC Manager, near the end of Trade Subcontractor's work. The punch list will include items that do not conform to the approved Drawings and Specifications and the estimated date by which the deficiencies will be corrected. A second inspection by the Trade Subcontractor CQC Manager will ascertain that all deficiencies have been corrected. Once this is accomplished the TJPA Representative will be notified that the facility is ready for the TJPA pre-final inspection.

PRE-FINAL INSPECTION

The TJPA Representative will perform the pre-final inspection to verify that the facility is complete and ready to be occupied. A TJPA Representative pre-final punch list may be

developed as a result of this inspection. Webcor/Obayashi JV will ensure that all items on this list have been corrected before notifying the TJPA Representative, so that a final inspection can be scheduled. Items noted on the pre-final inspection will be corrected in a timely manner. These inspections and any deficiency corrections required by this paragraph must be accomplished within the time slated for completion of the entire work or any particular increment of the Work if the Project is divided into increments by separate completion dates.

FINAL ACCEPTANCE INSPECTION

The CQC System Manager, plus the Contractor's authorized representative and the TJPA Representative must be in attendance at the final acceptance inspection. Additional personnel from affected third parties may also be in attendance. The final acceptance inspection will be formally scheduled by the TJPA Representative based upon results of the pre-final inspection. The TJPA Representative will be notified at least 72 hours prior to the final acceptance inspection and include the Contractor's assurance that all punch list and nonconforming work will be complete and acceptable by the date scheduled for the final acceptance inspection.

6. Quality Control Process

- Coordination Meeting
- Preparatory phase
- Initial phase
- Follow-up phase
- Trade Contractors CQC Plans
- Trade Contractors CQC Meetings

6. PROJECT QUALITY CONTROL PROCESS

The contractor quality control process is the means by which the Contractor, Trade Subcontractors and Suppliers, ensure that the construction complies with the requirements of the Contract. At least three phases of control must be conducted by the Trade Subcontractor CQC Manager for each definable feature of the construction work.

COORDINATION MEETING

After the pre-construction conference for each Trade Work Package, before start of construction, the Trade Contractor shall meet with the TJPA Representative, the TJPA QA Manager and the Webcor/Obayashi JV CQC Manager to discuss the Trade Subcontractor's quality control system as it relates to the work of the trade package. The Trade Subcontractor will submit the CQC Plan a minimum of 15 days prior to the coordination meeting. During the meeting, a mutual understanding of the system details must be developed, including the forms for recording the CQC operations, control activities, testing, administration of the system for both onsite and offsite work, and the interrelationship of Trade Subcontractor's management and control with the TJPA Representative's quality assurance. Minutes of the meeting will be prepared by the TJPA Representative, signed by both the Trade Subcontractor, the TJPA Representative and Webcor/Obayashi JV CQC Manager and will become a part of the Contract file. There may be occasions when subsequent conferences will be called by either party to confirm mutual understandings and/or address deficiencies in the CQC system or procedures that may require corrective action by the Trade Subcontractor.

PREPARATORY PHASE:

This phase is performed prior to beginning work on each definable feature of work, after all required plans, documents, and materials are approved and accepted, and after copies are at the work site. This phase includes:

1. A review of applicable specifications, reference codes, and standards. The Trade Subcontractor CQC Manager shall make available during the preparatory inspection a copy of those sections of referenced codes and standards applicable to that portion of the Work to be accomplished in the field. Maintain and make available in the field for use by TJPA Representative until final acceptance of the Work.
2. Review of the Contract drawings.
3. Check to assure that all materials and/or equipment have been tested, submitted, and approved.
4. Review of provisions that have been made to provide required control inspection and testing.

5. Examination of the work area to assure that all required preliminary work has been completed and is in compliance with the Contract.
6. Examination of required materials, equipment, and sample work to assure that they are on hand, conform to approved shop drawings or submitted data, and are properly stored.
7. Review of the appropriate activity hazard analysis to assure environmental requirements are met.
8. Discussion of procedures for controlling quality of the work including repetitive deficiencies. Document construction tolerances and workmanship standards for that feature of work.
9. Check to ensure that the portion of the CQC Plan for the work to be performed has been accepted by the TJPA Representative.
10. Discussion of the initial control phase.

The TJPA must be notified at least 48 hours in advance of beginning the preparatory control phase. Include a meeting conducted by the Trade Subcontractor CQC Manager and attended by the Contractor's authorized representative, other CQC personnel (as applicable), and the foreman responsible for the definable feature of work. The Trade Subcontractor CQC Manager shall document the results of the preparatory phase actions by separate minutes and attach the minutes to the daily CQC report. The Trade Subcontractor CQC Manager shall instruct applicable workers as to the acceptable level of workmanship required in order to meet Contract requirements.

INITIAL PHASE:

This phase is accomplished at the beginning of a definable feature of work. This phase includes:

1. Reviewing the minutes of the preparatory meeting.
2. Verifying the adequacy of controls to ensure full contract compliance, inspection and testing.
3. Establishing level of workmanship and verify that it meets minimum acceptable workmanship standards. Compare with required sample panels as appropriate.
4. Resolving all differences.

The TJPA must be notified at least 72 hours in advance of beginning the initial phase. The Trade Subcontractor CQC Manager shall prepare separate minutes of this phase and attach the minutes to the daily CQC report. The meeting will be conducted by the Trade Subcontractor CQC Manager and attended by the Contractor's authorized representative, other CQC personnel (as

applicable), and the foreman responsible for the definable feature of work The initial phase should be repeated for each new definable feature of work.

FOLLOW-UP PHASE:

The Trade Subcontractor CQC Manager shall perform daily checks to assure control activities, including control testing, are providing continued compliance with contract requirements until completion of the particular feature of work. Record the checks in the CQC documentation. Conduct final follow-up checks and correct all deficiencies prior to the start of additional features of work that may be affected by the deficient work. Do not build upon or conceal non-conforming work.

TRADE SUBCONTRACTORS QUALITY CONTROL PLAN

After contract award and prior to beginning construction activities each Trade Subcontractor will submit (per specification section 01 13 00 Submittals, paragraph 1.4) to the Webcor/Obayashi Joint Venture CQC Manager their project specific quality control plan for review and approval. Each Trade Subcontractor will designate and provide a project specific Trade Subcontractor Quality Control Manager who reports to the Webcor/Obayashi JV CQC Manager and who's primary responsibility will be to implement and manage the Trade Subcontractor's quality control plan and certify theTrade Subcontractor's compliance with the Webcor/Obayashi Joint Venture Quality Control Plan and all quality control requirenments contained in the project docuements including specification section 01 14 00 Quality Control. The Trade Subcontractors CQC program will be reviewed for compliance to the Contract Documents. In addition to the requirements contained in other sections of this Plan the Trade Contractors Quality Control Program will include:

- CQC Organization chart.
- Procedures for fabrication and installation.
- Procedures for planning and verifying compliance and controlling quality of the work (including checklist forms).
- Procedures for layout verification.
- Coordination with related contractors.
- List of specified tolerances and workmanship standards for each DFOW.
- Daily CQC Reports.
- Program for identifying and correcting defective work.
- Inspection, test and acceptance procedures when specified in the Technical Specifications to be part of the Trade Subcontractors scope.

TRADE SUBCONTRACTORS QUALITY CONTROL MEETINGS

In addition to the Three Phase of Control Meetings, A Trade Subcontractor CQC Meeting will be part of the Weekly Trade Subcontractors Meetings held by the Webcor/Obayashi JV Project Superintendent or Project Manager. The Trade Subcontractor CQC Manager will review current CQC issues as a segment of the weekly meeting; addressing the schedule, testing, inspection, re-work log, failed inspection status, short-term schedule of CQC activities, project tests, submittal status, factory verification requirements, inspection results and any other CQC issues relevant to the current activities.

7. Non-conformance and Corrective Action

- Overview
- Non-conformance Observations and Reporting
- Non-Conformance Report (NCR)
- Non-conformance Log
- Control the Continuation of Work
- Corrective Action Plan (CAP)

7. NON-CONFORMANCE AND CORRECTIVE ACTION

OVERVIEW

Should a non-conformance be identified by an inspection there is a systematic method to control the item, correct it, and ensure that project quality is not adversely impacted by the event. A non-conformance is an item that does not meet the requirements of the project specifications.

NON-CONFORMANCE OBSERVATIONS AND REPORTING

When work is identified as non-conforming it will immediately be segregated. Segregation may occur by physical isolation and cordoning off of work/materials, or conspicuously identified by tags/markings when physical isolation is not possible. The Trade Subcontractor CQC Manager will complete a Non-Conformance Report (NCR) (see forms Tab 12), and submit the report to the Webcor/Obayashi JV CQC Manager. Webcor/Obayashi JV will enter the non-conformance issue into CMiC for internal tracking. The NCR will be forwarded to the TJPA Construction Management Oversight Manager whose responsibility it is to track all project-wide non-conforming work. NCRs will be entered into Vela, TJPAs chosen system to track all non-conforming work.

NON-CONFORMANCE REPORT (NCR)

When completing the Non-Conformance Report the Trade Subcontractor CQC Manager will describe the work in detail, its location, a description of the deficiency and the proposed resolution and actions taken to prevent the recurrence of the non-conformance (see form in Tab 12). Supporting documentation may be attached as necessary. The report will be forwarded to the Webcor/Obayashi JV CQC Manager and the TJPA Construction Management Oversight Manager for review and approval. Non-conformance Report contents are summarized as follows:

Section 1: Non-conformance identification info: Contractor, location date, etc.
Section 2: Description of Non-conformance
Section 3: Cause
Section 4: Recommended Field Engineer Disposition (Trade Subcontractor CQC Manager)
Section 5: Project Engineering Disposition (TJPA)
Section 6: Disposition Results
Section 7: Corrective action and steps taken to prevent recurrence

NON-CONFORMANCE LOG

The project-wide Non-Conformance Tracking Log is maintained by the TJPA Construction Management Oversight. Webcor/Obayashi JV and the Trade Subcontractors will maintain Non-Conformance logs appropriate for their scope of work

CONTROL THE CONTINUATION OF WORK

After the item of work is identified and segregated from all other active work, the Trade Subcontractor CQC Manager will determine if work can continue in the affected area. When continuing work can adversely affect quality or hide the defect, work must stop in the affected area until the disposition of the item is resolved. The Trade Subcontractor CQC Manager identifies and clearly labels the limits of the affected stop work areas.. Non-conforming work may be reworked to meet requirements, accepted as is, repaired, or rejected. If accepted as is or repaired, the Engineer of Record needs to approve the deviation from original specifications. When appropriate, non–conforming work may require an approved Corrective Action Plan.

CORRECTIVE ACTION PLAN (CAP)

Once a NCR cause has been determined, a written Corrective Action Plan (CAP) will be created for non-conforming work. The CAP will be created by the Trade Subcontractor and submitted to Webcor/Obayashi's CQC Manager who will review and forward it to the TJPA Representative via Constructware. Webcor/Obayashi will attach the submitted CAP to the NCR in CMiC for internal tracking. Once approved, the CAP will be implemented by the Trade Subcontractor. Implementation of the CAP will be documented and monitored by the TJPA Construction Management Oversight Manager.

8. REPORTING PROCEDURES

8. REPORTING

Daily Reports

- Webcor/Obayashi JV Daily CQC reports (see Tab 12 “Forms”)
- Trade Subcontractors Daily CQC reports (see Tab 12 “Forms”)

Weekly Reports

- Webcor/Obayashi JV Submittal log
- Webcor/Obayashi JV Requests for Information log

Monthly Reports

- Webcor/Obayashi JV Construction Monthly Report
- Webcor/Obayashi JV CQC Managers Monthly Status Report (included in the Construction Monthly Report

Periodic forms, reports and lists

- Definable Features of Work (DFOW) list
- Non-Conformance Report (see Tab 12 “Forms”)
- Non-Conformance Log
- Independent testing agency reports

TRADE SUBCONTRACTORS QUALITY CONTROL REPORTING REQUIREMENTS

In addition to other information and documentation required to be submitted, described elsewhere in this CQC plan, the Trade Subcontractors CQC Manager will submit the following documents promptly to the Webcor/Obayashi JV CQC Manager:

- Trade Subcontractor Daily CQC reports
- Independent testing agency reports, calibration reports, (may be included as part of the Trade Subcontractor's Daily CQC report
- Preparatory Phase Meeting Documentation
- Initial Phase Meeting Documentation
- Follow-up Phase Changes in Procedures
- Non-Conformance Reports and associated corrective action plans (as required)

9. DEFINABLE FEATURES OF WORK (DFOW)

9. DEFINABLE FEATURES OF WORK (DFOW)

The Webcor/Obayashi CQC Manager working with the Trade subcontractors and production team reviews the project schedule, plans and specifications to establish a list of definable features of work. Each Definable Feature of Work is separate and distinct from the other tasks. It may have unique control requirements and be associated with each individual trade discipline and/or trade subcontractor.

This DFOW list will be developed incrementally and additional DFOWs will be added as trade subcontractors are brought on board. Trade subcontractors will submit their DFOW lists for approval, as part of their CQC Plans prior to the start of work. The DFOW list will be maintained in the Project Baseline Schedule (R3) 30100-11.09.06 and in spreadsheet format (see page 2 in this section; Tab 9). The DFOW list will include associated submittals.

Exhibit K

Construction Stormwater Pollution Control/Compliance Plan

Transbay Transit Center Project
San Francisco, California

WEBCOR BUILDERS OBAYASHI JOINT VENTURE

Reviewed by Webcor/Obayashi

951 Mariners Island Blvd
San Mateo, CA 94404

Review is for general coordination and conformance with design intent only and for submittal in accordance with the contract documents. Review by Webcor Builders does not relieve the subcontractor and/or supplier of responsibility for full coordination, accurate dimensions, correct quantities and full compliance with the contract documents. In the event subcontractor and/or supplier intends to propose any substitution or deviation to the contract documents, each substitution or deviation must be submitted and approved prior to submitting it in a shop drawing or other submittal. Review by Webcor does not imply acceptance of any substitution or deviation.

Submittal Pkg. Number: **WO-SWP0001.4**

Submittal Number: **WO0000-011561W01**

Webcor Job No.: 30100 Transbay Transit Center

Reviewed By: Joanne Filipas

Date: 02/25/2011

Subcontractor: Webcor/Obayashi

05/11 V1.3

Prepared for:
Webcor /Obayashi

2011 FEB 24 PM 1 49

WASTEWATER ENTERPRISE
COLLECTION SYSTEM DIVISION

APPROVED AS "NOT"

Prepared by:

WRECO

February 2011

Transbay Transit Center
San Francisco, California

Construction Stormwater Pollution Control/Compliance Plan

Submitted to:
Webcor /Obayashi

This report has been prepared by or under the supervision of the following Qualified Storm Water Pollution Prevention Developer and Construction General Permit Trainer of Record.

Debra Carey

Debra Carey, QSD, ToR, CEG

Feb 22, 2011

Date

February 2011

Table of Contents

Figures

Tables

Appendices

1 REGULATORY SETTING

The Transbay Transit Center Project (Project) meets federal Clean Water Act (CWA) and State Porter – Cologne Water Quality Control requirements via connection to the combined wastewater and stormwater sewer system operated by the San Francisco Public Utilities Commission (SFPUC) under a State Water Resources Control Board-issued National Pollutant Discharge Elimination System (NPDES) permit (Order No. R2-2002-0073, NPDES Permit No CA0037664). The Project is therefore not subject to coverage under the California Construction General Stormwater Permit (Order 2009-0009-DWG), that became effective on July 1, 2010; however, the construction site must implement Best Management Practices (BMPs) to prevent pollutant discharge into the combined sewer to comply with the San Francisco municipal ordinances and codes described below. This Construction Stormwater Pollution Control/Compliance Plan provides a delegation strategy along with best management practice (BMP) categories for compliance with stormwater regulations covering construction activities at the Project.

San Francisco Ordinance

San Francisco has a Stormwater Discharge Controls Ordinance requiring Pollution Prevention Procedures during any construction conducted in the City of San Francisco. In general the ordinance discusses long term BMPs such as rain gardens and green roofs particularly applicable to redevelopment areas and sections of the City serviced by small municipal separate storm sewer systems (MS4); however aspects of the ordinance apply to construction activities. For example, although coverage under the NPDES General Construction Permit (Water Board Order No. 99-08-DWQ) is not required for projects in those areas of the city that drain to the combined sewer system; all construction sites must implement BMPs to prevent illicit discharge into the combined sewer. Generally, City requirements include the development of a Storm Water Pollution Prevention Plan (SWPPP), SWPPP plan review by SFPUC, stormwater treatment measures, runoff monitoring, and frequent site inspections. The regulations also require the use of construction period (and operational period) BMPs on construction sites to keep pollutants (sediment and construction site debris), out of water conveyance systems, the treatment plants, and discharge points.

San Francisco Public Works Code

The federal CWA requires that publicly-owned treatment works (POTW) regulate the discharge of industrial wastes into a sewer system subject to NPDES permit requirements, and since construction activity is regulated under the industrial category, San Francisco's department of public works (DPW) has adopted requirements for construction discharges to the combined sewer system. Under DPW regulations, discharges of construction storm water as well as any wastewater (such as dewatering from construction sites) is subject to the requirements of Article 4.1 of the San Francisco Public Works Code, which regulates the quantity and quality of discharges to the combined sewer system. Projects that conduct any dewatering activity are required to apply for a Wastewater Batch Discharge Permit from the SF PUC WWE_CSD. Information on the Batch Discharge Permit and pre-treatment can be found online at: **http://sfwater.org/msc_main.cfm/MC_ID/14/MSC_ID/445.**

Order No. 158170 of the San Francisco DPW provides additional pre-treatment industrial waste discharge limits to augment those listed in Article 4.1. The San Francisco Municipal Code requires contractors to have a Sediment and Erosion Control Plan for projects that discharge to the Combined Sewer System.

RESPONSIBLE PARTIES

The legally Responsible Party for the Project is the Transbay Joint Powers Authority (TJPA). The TJPA consists of a collaboration of Bay Area government and transportation agencies, and is managed by TJPA staff and overseen by a Board of Directors. For site-specific concerns that can be addressed by TJPA, please call **415.409.TJPA (8572)**.

Webcor /Obayashi is a joint venture contracting group hired by TJPA as general contractor for the Transbay Terminal Center Phase of the Project. Webcor /Obayashi will be subcontracting construction to Trade Subcontractors who will be responsible for preparing SWPPPs specific to their construction activity, schedule, discharge points, types of pollutants and construction boundaries. The Trade Subcontractors will be responsible for preparing and submitting for approval a SWPPP including furnishing, installing, maintaining and removing BMPs such as silt fence, filter boxes, construction entrances, sediment traps, dust control, dewatering and other erosion and sediment control measures during construction to prevent contamination of storm water from construction activities and to maintain compliance with the SF storm water ordinance and codes. For site-specific NPDES concerns that can be addressed by Webcor/Obayashi, please call **415.978.5726**.

2 PROJECT INFORMATION

2.2 Project Description

The Project is located generally between Second Street in the west, Beale Street in the east, Natoma Street in the south and Minna Street in the north (Figure 1). The Project is part of a larger $4 billion transportation and housing expansion/redevelopment effort that will replace an old Transbay Terminal at First and Mission streets with a modern regional transit hub connecting eight Bay Area counties and the State of California through 11 transit systems: AC Transit, BART, Caltrain, Golden Gate Transit, Greyhound, Muni, SamTrans, WestCAT Lynx, Amtrak, Paratransit and future High Speed Rail from San Francisco to Los Angeles/Anaheim.

The entire Project consists of three broad activities as noted below. Webcor /Obayashi are the general contractors and have prepared this Construction Stormwater Pollution Control/Compliance Plan to provide for compliance with stormwater regulations covering construction activities.

- **Utility Relocation**
- **Train Box and Transit Center Building Construction**
- **Bus Ramp Construction**

Figure 1. Project Location Map

2.3 Project Size and Total Disturbed Area

The estimated total disturbed soil area (DSA) for the Project is approximately 12.3 acres and includes the areas where the soil might be potentially disturbed by construction activities, as follows:

Table 1. Total Land Disturbance

Area Name	Approximate Area Disturbed (Acres)
Zone 1	2
Zone 2	1.8
Zone 3	1.5
Zone 4	4
Linear Utility Relocation	2.5
Additional Staging/Disturbance	3
Total	12.3

Figures 2 and 3 show general locations for the DSA construction zones and linear utility relocation trade packages. Several staging areas are anticipated during the life of the Project as shown in Figure 4.

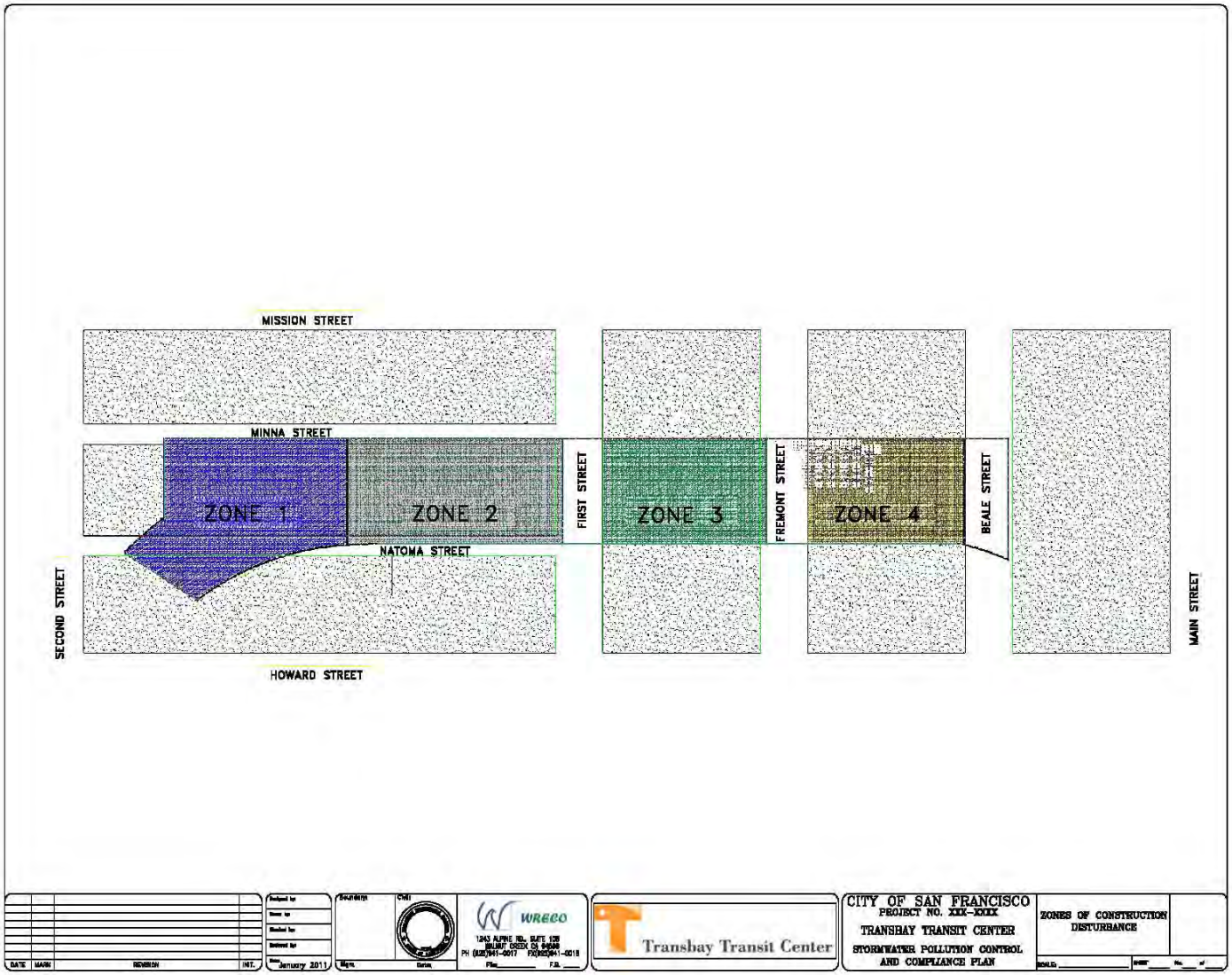

Figure 2. Construction Zone Locations

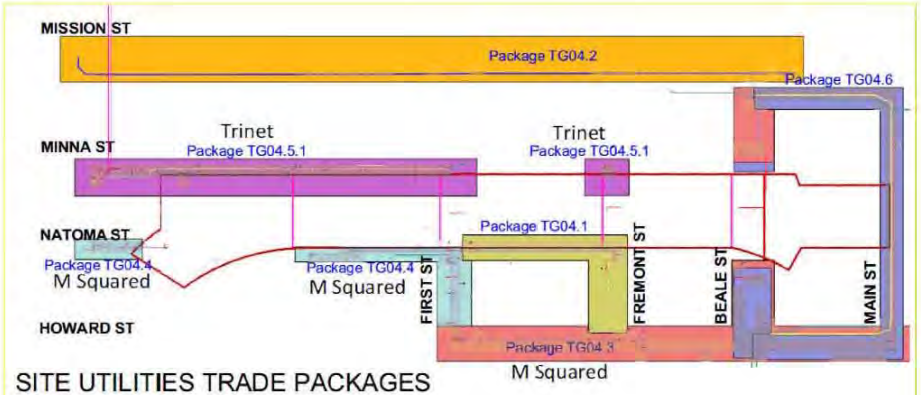

SITE UTILITIES TRADE PACKAGES

Package	Scope	Streets
4.5.1	Water/Sewer	Minna - 1st to 2nd 1st - Minna to Mission
4.5.1	Joint Trench - PG&E and AT&T	Minna
4.4	Water/Sewer	Natoma - 1st to 2nd 1st - Natoma to Howard
4.3	Water	Howard - 1st to Main St Beale St
4.2	AWSS	Mission St
4.1	Sewer/Water	Natoma - 1st to Fremont Fremont - Natoma to Howard
4.6	Sewer/Sludge	Sewer at Beale - Sludge at Howard, Main and Mission

NOT FOR CONSTRUCTION

DATE | MARK | REVISION | INIT.

Designed by
Drawn by
Checked by
Reviewed by
Date: January 2011

Boundary: Civil:
Field: Date:

1243 ALPINE RD., SUITE 106
WALNUT CREEK CA 94596
PH (925)941-0017 FX(925)941-6018
File: FB:

Transbay Transit Center

CITY OF SAN FRANCISCO
PROJECT NO. XXX-XXXX
TRANSBAY TRANSIT CENTER
STORMWATER POLLUTION CONTROL AND COMPLIANCE PLAN

UTILITIES DSA MAP

SCALE: SHEET No. of

Figure 3. Utilities DSA Map

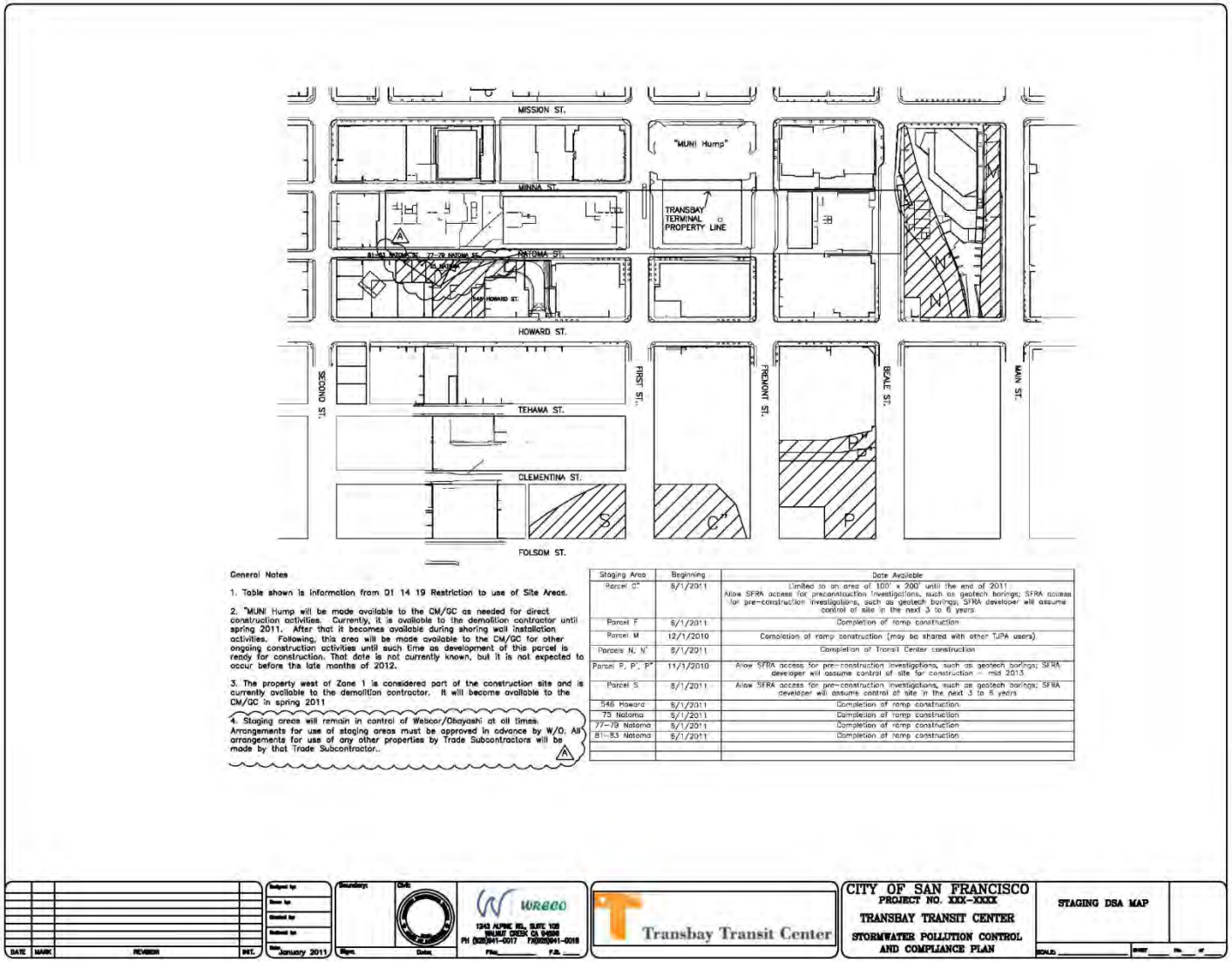

Figure 4. Staging DSA Map

2.4 Receiving Waters and Environmentally Sensitive Areas

The Project is located within the northeastern section of the City of San Francisco. The Project does not discharge directly to jurisdictional "receiving water." The San Francisco combined sanitary/storm water sewer system collects all storm and waste water discharging in the Project vicinity and pipes the water to the Southeast Water Pollution Control Plant for processing and discharging under NPDES Permit No CA0037664. The SE plant currently treats runoff to secondary treatment standards established by the USEPA, meeting or exceeding water quality objectives in San Francisco Bay.

The San Francisco Bay Area has a climate characterized by wet winters and dry summers. Average annual rainfall in the area is approximately 20 inches. The majority of this rainfall generally occurs from November through April with little rainfall during the remaining months of the year. Construction for the Project will span a period of several years including both wet and dry seasons. The project does not impact any known environmentally or culturally sensitive areas. For information regarding any environmentally sensitive habitat concerns, please refer to the Biological Resource Assessment. For information on cultural or other CEQA or NEPA requirements, please refer to the appropriate State or Federal Agency.

2.5 Construction Activities and Schedule

The Project activities include but are not limited to clearing, excavation and backfill, construction and finishing work within a busy city environment with established infrastructure. Several staging areas are anticipated during the life of the Project. Construction equipment and materials will be stored both onsite and at staging areas. As a result, fueling and maintenance, as well as welding and fabrication, may take place onsite. A discussion of the pollutants with potential to contact storm water as a result of these activities is included below. Since demolition of the existing ramps and terminal is currently underway by another contractor (Evans Bros Inc), the first phase of the Webcor-Obayashi Project includes utility relocation, followed by subexcavation in preparation for construction of the Transit Center Building/Train Box. Construction overseen by Webcor-Obayashi will create a new five-story Transit Center with one above-grade bus level, ground-floor, concourse, and two below-grade rail levels serving Caltrain and future California High Speed Rail, and includes new bus ramps to connect the Transit Center to a new off-site bus storage facility and the SF-Oakland Bay Bridge. Construction of the Project should be completed within or near the year 2017.

The following list generally outlines the expected Project construction schedule:

1. Utility relocation November 2010-September 2011.
2. Protection of perimeter: March 2011.
3. Trade Subcontractors awarded contracts: April 2011.
4. Activity specific SWPPPs submitted by Trade Subcontractors: April 2011.
5. Sediment control products ordered and stored on site by Trade Subcontractors: May 2011.
6. Stabilized construction entrance, equipment parking, covered storage and any concrete wash areas constructed by Trade Subcontractors: May 2011.
7. Excavation and Dewatering by Trade Subcontractors: May 2011-April 2014.

8. Transit Center Building Construction: May 2013-August 2017.
9. Bus Ramps: 4th quarter 2012-4th quarter 2014.
10. Construction of the concrete form box and train box by Trade Subcontractors: TBD.
11. Vertical Construction by Trade Subcontractors: 2013-2017.
12. Monitoring and Maintenance of BMPs: Entire construction timeline by Trade Subcontractors.
13. All BMPs functional: Entire construction timeline.

2.6 Potential Construction Site Pollutant Sources

Potential materials expected from the project include, but are not limited to, excavated soil, oil products (gasoline, diesel, hydraulic oil, and kerosene), solvents, concrete and curing compounds, and other construction materials. Construction on the project site will require temporary disturbance of surface soils and removal of existing on-site pavements and subsurface structures. During the construction period, excavation and grading activities will result in exposure of soil to water runoff, and the use of haul trucks that could track material away from the construction site. Much of the excavated material will be typical of coarser sandy soil particles that do not mobilize easily. However, some of the material may consist of relatively mobile fine sediments (silt and clay). Most excavation will occur in a below-grade pit which will drain internally and contain storm water; however construction activities will impact areas outside of the excavation areas that drain toward the San Francisco combined sewer drain inlets. Water in excavation pits from rainfall and groundwater seepage would contain sediment. Removal of the pit water will probably require sediment removal before it can be discharged into the storm drains (see SF PW Code paragraph above).

Soil and debris on the haul truck tires exiting the site could be deposited on local streets and Transport in storm water into the storm drain. The majority of construction debris and materials would be loaded onto trucks within the interior of the construction boundaries, rather than from public sidewalks or streets bordering the project site. The construction debris and materials would then be hauled off site. Therefore, soil stockpiles would be minimized on site.

In addition to sediment, Table 2 lists expected construction materials that could generate pollutants, describes their chemical and physical properties, and identifies potential pollutants associated with them. This list should be updated as the project proceeds and additional phases begin.

Table 2. Potential Stormwater Pollutants

Source	Chemical/Physical Description	Storm Water Pollutants*
Diesel Fuel	Clear, blue-green to yellow liquid	TPH-diesel, benzene, toluene, ethylbenzene, xylenes, naphthalene
Concrete Work	Cement, fly ash, aggregate	pH
Oil and Grease	Brown oily petroleum	TPH-motor oil, oil and grease
Used Oil (oil only)	Brown oily petroleum	TPH-motor oil, oil and grease, LUFT 5 metals (cadmium, chromium, lead, nickel, and zinc)
Excavated and Stockpiled Soil	Solid particles	Soil, sediment
Gasoline	Colorless, pale brown or pink petroleum hydrocarbon	TPH-gasoline, benzene, toluene, ethylbenzene, xylenes. For "old" releases, include DIPE; ETBE; MTBE; TAME; TBA; 1,2-dibromoethane (1,2-DBA); and 1,2-dichloroethane (1,2-DCA)
Hydraulic Oil/Fluids	Brown oily petroleum hydrocarbon	TPH-hydraulic oil, benzene, toluene, ethylbenzene, xylenes, LUFT 5 metals (cadmium, chromium, lead, nickel, and zinc)
Sanitary/Septic Waste	Sewage products	Coliform, *E. coli*, viruses, solvents (i.e. volatile organic compounds such as trihalomethanes and the dichlorobenzene isomers), nitrate
Trash; Windblown and Other	Paper, pipe, electrical wires etc.	Paper, pipe, electrical wires etc.

Notes: *****TPH-gasoline = total petroleum hydrocarbons quantified as gasoline (the same pattern for TPH-diesel, TPH-motor oil, TPH-hydraulic oil)
BTEX = benzene, toluene, ethylbenzene, and xylenes
DIPE = di-isopropyl ether
ETBE = ethyl tertiary butyl ether
MTBE = methyl tertiary butyl ether
TAME = tertiary amyl methyl ether
TBA = tertiary butyl alcohol
LUFT = leaking underground fuel tank
PCBs = polychlorinated biphenyls

Pollutants of concern in the San Francisco Bay include, but are not limited to, mercury, diazinon and Polychlorinated Biphenyls (PCBs). These chemicals are not easily broken down and they tend to adhere to particles of sediment, so can be removed from stormwater in BMPs that trap sediment. For this reason, sediment trapping BMPs are highlighted in the treatment controls listed for the project. Additional pollutant categories that can be anticipated in stormwater leaving the project include oil and grease, trash, sediment, organic compounds, pesticides, nutrients and metals.

2.7 Identification of Non-Storm Water Discharges

Non-storm water discharges include a wide variety of sources and may contribute pollutant loads if not controlled. They can include, but are not limited to:

- discharges of process water
- saw cutting slurry
- air conditioner condensate
- non-contact cooling water
- vehicle wash water
- sanitary wastes concrete washout water
- paint wash water
- irrigation water
- pipe testing water
- natural groundwater seepage

Measures to control spills, leakage, and dumping, and to prevent illicit connections during construction must be addressed through structural as well as non-structural BMPs. Certain non-storm water discharges may be necessary for the completion of construction projects. Authorized non-storm water discharges may include those from de-chlorinated potable water sources such as: fire hydrant flushing, irrigation of vegetative erosion control measures, pipe flushing and testing, water to control dust, uncontaminated ground water dewatering, and other discharges not subject to a separate general NPDES permit adopted by a region. Authorized non-storm water dewatering discharges require a permit. Information can be found online at: **http://sfwater.org/msc_main.cfm/MC_ID/14/MSC_ID/445.**

Each Trade Subcontractor is responsible for procuring the necessary dewatering permits for construction activities undertaken. The SFPUC prohibits the discharge of storm water that causes or threatens to cause pollution, contamination, or nuisance.

Additionally, all SWPPPs prepared by Trade Subcontractors must include procedures and practices designed to minimize or eliminate the discharge offsite of pollutants from vehicle and equipment cleaning, fueling, maintenance operations and other non-storm water. Project monitoring by trade Subcontractors will include a visual check for non-storm water discharges and non-storm water discharge potential.

3 BEST MANAGEMENT PRACTICES (BMPS)

BMPs shall be implemented as listed in this Plan and additionally as necessary to adequately minimize erosion on site and limit sediment transport off site to an acceptable level in accordance with the SFPUC regulations and all City Codes and Ordinances.

Erosion and sediment control measures are needed throughout the year on the Project. In particular, stormwater catch basins must be protected year round. During dry season development, BMPs will be primarily designed to mitigate the movement of sediment and pollutants off site by tracking from grading equipment and from wind. Wet season BMPs are designed to prevent soil from washing off graded areas during rainy periods, tracking of soil and pollutants off site by vehicles and any other movement of pollutants from the Project.

3.2 BMP Objectives

This Construction Stormwater Pollution Control/Compliance Plan provides the following BMP objectives:

- Provide overall guidance to Trade Subcontractors in preparing SWPPPs and dewatering plans specific to their construction activities, construction timelines and drainage areas for submittal to the SFPUC.
- Delineate typical construction pollutants and their sources, including sources of sediment associated with construction, construction site erosion and other activities associated with anticipated construction activity. Trade Subcontractors are expected to expand and amend the information provided here within to tailor their SWPPPs to their activities.
- Outline best management practice (BMP) categories that need to be included in the SWPPPs prepared, submitted and maintained by the Trade Subcontractors to a level that results in the reduction or elimination of pollutants in storm water discharges and authorized non-storm water discharges from construction activity to the standard required by the SFPUC.

BMPs categories listed in this Construction Stormwater Pollution Control/Compliance Plan should be reviewed by the Trade Subcontractors, added to their SWPPPs as applicable and additionally installed, maintained, monitored and reported as practicable to adequately minimize erosion on site and limit sediment transport off site to an acceptable level. Adjustments and modifications to the BMPs identified in this Plan need to be implemented by the Trade Subcontractors as necessary to maintain the construction site in accordance with the provisions of the SFPUC regulations and all City Codes and Ordinances.

The SFPUC identifies the following list of BMPs and pollution prevention measures that must be implemented at all construction sites:

- Identify all storm drains and catch basins near the construction site and ensure all workers are aware of their locations to prevent pollutants from entering them.
- Protect all storm drain and catch basin inlets.
- Develop an erosion control and sediment control plan for wind and rain.
- Develop spill response and containment procedures.
- Inspect site regularly to ensure that BMPs are intact.

- Conduct daily site cleanings as needed.
- Educate employees and subcontractors about BMPs.
- Regularly maintain all BMPs at project site.

3.2.1 Erosion Control BMPs

Erosion control practices consist of source control measures designed to prevent soil particles from becoming dislodged and transported in storm water runoff, while sediment control measures filter and otherwise recover soil particles from runoff. Erosion control BMPs protect the soil surface by covering and/or binding soil particles and in many cases, are more effective, less expensive, and require less maintenance and repair. Although they typically function by protecting the surface of exposed soil, erosion control measures cannot be effectively applied until grading activities are complete or idle.

At the Project, erosion is expected to occur primarily as a result of pavement removal, soil disturbance and subsequent wind or rain. For this reason, BMPs to limit the timing of soil disturbance and provide timely stabilization for the disturbed soil surface should be the focus of erosion control efforts for the site. Erosion control BMPs such as scheduling and non-vegetative soil stabilization (soil binders) should be considered by each Trade Subcontractor (TS) and added to their SWPPPS to control soil erosion on the construction site. Modifications to the BMPs may be necessary should construction activities or the construction schedule be altered. If modifications are needed to the BMPs, the Trade Subcontractor should work with the SFPUC to amend the SWPPP and Erosion Control BMPs to satisfactorily meet City storm water regulations.

Scheduling should be implemented throughout the project as a means of ensuring that significant earth-disturbing activities are avoided if rain is forecasted. If there are exposed areas that are not being actively worked the trade Subcontractors should consider stabilizing all areas as practical. If additional information or instructions are needed for BMP installations, the CASQA website and cutsheets can be found at: **www.casqa.org.**

3.2.2 Sediment Control BMPs

Sediment control is any practice that traps soil particles after they have been detached and moved by rain, flowing water, or wind. Sediment control measures are usually passive systems that rely on filtering or settling the particles. Sediment control, or capturing the sediment once it is mobilized, is considered back up or secondary to good erosion control.
Table 3 indicates the BMPs for sediment control that should be considered and included in SWPPPs by trade Subcontractors as applicable on the construction site.

Table 3. Construction Sediment Control BMPs

BMP Name
Silt Fence
Fiber Rolls
Gravel Bag Berm
Sand Bag Barrier
Storm Drain Inlet Protection
Stockpile Management

If additional information or instructions are needed for BMP installations, the CASQA website and Cutsheets can be found at: **www.casqa.org.**

3.2.3 Tracking Control BMPs

Tracking control consists of preventing or reducing the tracking of sediment off site by vehicles. Daily inspections will be conducted at the construction entrances and if track-out is observed, the area will be swept by the Trade Subcontractors. If additional information or instructions are needed for BMP installations, the CASQA website and cutsheets can be found at: **www.casqa.org.**

3.2.4 Wind Erosion Control BMPs

Wind Erosion Control is a very important BMP for the Project. All Trade Subcontractors are required to comply with the regulations specified by the local Air Quality Control District. Construction will be halted if required to do so due to high wind conditions as specified by the local Air Quality Control District, and/or common sense. Alternative forms of wind erosion control such as tackifiers and covers will be utilized as necessary to avoid and minimize windblown dust from leaving the project site. If additional information or instructions are needed for BMP installations, the CASQA website and cutsheets can be found at: **www.casqa.org.**

3.2.5 Non-Storm Water Control BMPs

Non-storm water management BMPs are source control BMPs that prevent pollution by limiting or reducing potential non-storm water pollutants at their source or eliminating offsite discharge. These practices involve day-to-day operations of the construction site and are also referred to as “good housekeeping practices” which involve keeping a clean, orderly construction site.

Non-storm water management BMPs includes procedures and practices designed to minimize or eliminate the discharge of pollutants from vehicle and equipment cleaning, saw cutting, pipe testing and other activities that generate liquid slurry or water based effluent. All storm/sanitary drain inlets should be located and protected during construction such that non-storm water carrying pollutants does not enter the inlets. Paving and concrete work should be undertaken during dry weather and drain inlets covered

during these activities. During wet weather construction, the drain inlets should be protected with a BMP that filters water such as sediment traps, silt bags and straw wattle.

3.2.6 Waste Management/Materials Control BMPs

Waste management and materials pollution control BMPs, like non-storm water management BMPs, are source control BMPs that prevent pollution by limiting or reducing potential pollutants at their source before they come in contact with storm water.

These BMPs also involve day-to-day operations of the construction site, are under the control of the Trade Subcontractors, and are additional "good housekeeping practices" which involve keeping a clean, orderly construction site. Waste management consists of implementing procedural and structural BMPs for handling, storing, and disposing of wastes generated by a construction project. The objective is to prevent the release of waste materials into storm water runoff or discharges through proper management of the following types of wastes:

- Solid
- Sanitary
- Concrete
- Hazardous
- Equipment – related wastes

Materials pollution control (also called materials handling) consists of implementing procedural and structural BMPs in the handling, storing, and the use of construction materials. The BMPs are intended to prevent the release of pollutants during storm water and non-storm water discharges. The objective is to prevent or reduce the opportunity for contamination of storm water runoff from construction materials by covering and/or providing secondary containment of storage areas, and by taking adequate precautions when handling materials. Material Safety Data Sheets, covered and secondary containment and employee training are important examples of materials pollution control. These controls must be implemented for all applicable activities, material usage, and site conditions by each Trade Subcontractor working on the Project.

The following BMP Table 4 indicates the BMPs for Trade Subcontractors to utilize to control construction site wastes and materials for the project.

Table 4. Waste Management and Material Handling Control BMPs

BMP Name
Material Delivery & Storage
Material Use
Spill Control
Solid Waste Management
Hazardous Materials/ Waste Management
Concrete Waste Management
Sanitary/Septic Waste Management
Liquid Waste Management

Fuel (gasoline/diesel), hydraulic oil, motor oil, and other liquid or hazardous waste materials used for vehicle and equipment maintenance may be used on the construction site and at the lay down areas if applicable permits are obtained and spill/response measures are adhered to. Minor amounts of lubricants and hydraulic fluid may be stored in vehicles. Spill response equipment will also be located onsite and near active construction.

Waste management BMPs includes procedures and practices designed to minimize or eliminate the discharge of pollutants from vehicle and equipment use, as well as fueling and maintenance operations to storm water drainage systems or to watercourses. Drip pans, diapers or alternative containment will be placed under equipment and vehicles (as applicable during maintenance or if leaking is suspected) while not in use, to catch and/or contain drips and leaks and prevent soil contamination. Construction crews will be educated to check parking areas visually for signs of leaking liquids; any vehicles found to be leaking onto the soil surface will be provided with temporary drip pans while at the project site. Fueling may be conducted on the job site and at the lay down area if fueling BMPs are implemented, appropriate permits are obtained and proper spill control policies and procedures are followed.

It is important that Trade Subcontractors minimize or abate the exposure of materials stored or spilled at the site. Spill Response Procedures for smaller spills are presented in BMPs. If a larger spill or discharge offsite occurs, or if the project receives a written notice or order from any regulatory agency, Trade Subcontractors will follow their Health & Safety Plan and Spill Prevention Countermeasure and Control Plan (SPCC) as well as comply with all Federal, State and local spill reporting regulations.

4 BMP INSPECTION, MAINTENANCE AND RECORD KEEPING

Inspection and maintenance of BMPs are an integral part of the Project and will be followed by the Trade Subcontractors. During visual inspections, if any BMP deficiencies or any storm water compliance issues are observed, the Trade Subcontractor's Construction Supervisor will be notified immediately and the deficiencies will corrected as soon as possible. The Trade Subcontractors are responsible for maintaining and/or submitting any required monitoring records as required by regulatory agencies in accordance with current regulatory guidelines.

Table 5. Trade Subcontractor Maintenance, Monitoring and Repair Procedures

PRACTICE	MONITORING, MAINTENANCE AND REPAIR PROCEDURES
Erosion Control	Check all soil protection including fabric, plastic, rock, hydroseed, mulch and velocity dissipation before, during and after rain events. Repair or replace as necessary to maintain proper function.
Street Cleaning	Streets must be periodically cleaned. Large quantities of soil tracked onto the street will be picked up by a loader bucket and/or hand shoveled back onto the pad. Streets must also be swept on an as-needed basis to maintain continuous sediment and litter control. Street washing shall not be done.
Sediment Control	Check integrity and functioning of berms, straw bales, check dams, and silt fences. Repair any eroded areas and remove accumulated debris.
Inlet Protection	Monitor installation and maintenance of sediment barriers and inlet protection devices. Check periodically during storms and repair or remove sediment as necessary to maintain appropriate functioning.
Temporary Basins	Remove accumulated sediment when sediment accumulates to within one foot of the outlet elevation and restore original dimensions of the basin. Obtain dewatering discharge permit from SFPUC prior to any dewatering of stored surface or groundwater.
Materials/ Equipment Storage	• Petroleum products shall be stored out of the rain and waste materials shall be stored in secured containers. Paints, solvents, enamels, sealers, bonding agents, and other chemicals shall be stored inside a covered, secure area. • Keep designated storage areas clean and well organized. Conduct weekly monitoring to check for damaged containers, leaks, etc. • Keep chemicals in original containers and keep them labeled. • Train employees and subcontractors on the use of the storage area.
Fueling Practices	• If refueling of equipment is conducted on site, make sure that

PRACTICE	MONITORING, MAINTENANCE AND REPAIR PROCEDURES
	fueling is occurring in designated areas and that secondary containment items such as drain pan or drop cloth are nearby to catch fuels/leaks. • Inspect and maintain vehicles and equipment regularly to minimize leaks and drips. • Comply with Federal, State and local requirements for fuel storage tanks.
Herbicide/ Pesticide Application	Provide the landscape contractor with knowledge about proper procedures for application of designated chemicals.
Waste Disposal	Provide proper disposal procedures for specific materials
Litter Control	Place trash bins in appropriate locations and are being used properly. Pets will not be allowed on the Project during construction.
Equipment Cleaning	If equipment cleaning is done on site, make sure contractors are using designated, bermed wash areas to prevent wash water from entering storm drain system.

5 LIST OF CONTRACTORS/SUBCONTRACTORS

The following is a partial list of Trade Subcontractors, suppliers and consultants that may be employed on the Project. Names and contact numbers for each activity on the list can be obtained from Webcor /Obayashi upon request. This list is to be updated as necessary. This plan can be utilized as part of a subcontractor notification letter to document Subcontractors notification of their obligation to uphold applicable storm water pollution control regulations.

TRADE	NAME	Signature Indicating Willingness To Provide, Maintain, and Implement SWPPP in compliance with all applicable City Ordinances and Codes
Architect		
Bricklayers		
Cabinet Makers		
Carpenters (finish)		
Carpenters (rough)		
Ceramic Tile Installers		
Civil Engineer		
Cleaning Crews		
Concrete Subcontractors Testers		
Demolition Contractors		
Door Installers		
Drywall Installers		
Electricians		
Environmental Consultants		
Fence Builders		
Fireplace Installer		
Flooring Installers		
Garage Door Installers		
Glass Workers		
Grading Contractors		
Hardware Installers		
HVAC Contractors		
Insulation Contractors		
Marble Contractors		
Masonry Contractors		

TRADE	NAME	Signature Indicating Willingness To Provide, Maintain, and Implement SWPPP in compliance with all applicable City Ordinances and Codes
Millwork Suppliers		
Landscaping Contractors		
Landscape Maintenance Crews		
Lumber and Truss Suppliers		
Mirror and Shower Door Installers		
Painting Contractors		
Paving Contractors		
Pipeline Contractors		
Plaster Contractors		
Plumbing Contractors		
Roofing Contractors		
Shelving Installers		
Striping and Signage Contractors		
Stucco Contractors		
Termite Contractors		
Underground Utility Crews	Trinet	
Waterproofing Subcontractors		
Window Installers		

6 INSTRUCTIONS TO FIELD PERSONNEL

Webcor /Obayashi will be responsible for mandating that SWPPP documents be prepared by Trade Subcontractors and also for observing the site on a regular basis in keeping with the standard of care for a General Contractor. Webcor /Obayashi will coordinate day to day oversight of the Project as a whole, track compliance with their contract obligations as well as Trade Subcontractor costs, direct Trade Subcontractors to maintain the Project site in accordance with all applicable regulations, and attend to discussions with the City regarding compliance concerns. Contracts with Trade Subcontractors and Sub tier Subcontractors shall include a requirement to comply with the provisions of this Plan and to maintain compliance with all applicable City Ordinances and Codes. The Trade Subcontractors, Sub tier Subcontractors and their Project Superintendents for this project are hereby authorized to uphold, certify, and maintain their own SWPPPs and to distribute it to all field personnel responsible for monitoring the site and maintaining compliance with storm water regulations. All subcontractors, field personnel and their assigns that work at the site must conform to the requirements described in this Plan and the SWPPP developed for Trade Subcontractor activities and any alterations thereof made at the time and in the manner herein specified, and in all respects according to its intent and meaning, and shall indemnify and hold harmless Webcor /Obayashi, its officers and agents, if failure to conform results in legal action or any other action by the Regional Water Quality Control Board or City. Duties of the Trade Subcontractors include but are not limited to:

- Maintaining full compliance with their SWPPP and all City Codes and Ordinances.
- To this effect, the Trade Subcontractors shall have authority to mobilize their own crews for:
    - BMP Installation, monitoring and maintenance.
    - Obtaining dewatering and other applicable permits necessary for the satisfactory completion of their contract.
    - Providing for elimination of all unauthorized discharges.
    - Coordinating with the City such that all updates, amendments, corrections and/or repairs are made in a timely fashion.
    - Stopping any construction activity that is in violation of municipal ordinances or codes or that is inconsistent with the provisions of the Trade Subcontractors SWPPP.

7 CLOSING

The Project will comply with the storm water discharge regulatory framework in the site vicinity through implementation of this Construction Stormwater Pollution Control/Compliance Plan. This Plan indicates that each Trade Subcontractor is responsible for preparing, submitting for approval, installing and maintaining a SWPPP with BMPs for protecting inlets to the SF combined sewer system from construction activities. BMPs included in the SWPPPs prepared by each Trade Subcontractor should include practices from the BMP categories outlined in this Plan. The SWPPP shall be implemented concurrently with the commencement of Trade Subcontractor construction activities and maintained by the Trade Subcontractor in a form that provides the Project with full compliance throughout the construction schedule for activities undertaken by the Trade Subcontractor. Though projects such as the subject Project that are serviced by the combined sewer system in San Francisco are not subject to the terms of the State Construction General Permit, Section A of the Construction General Permit describes in detail the requirements for a SWPPP, and the City and County San Francisco specifies that it should be used as a design guide. All construction sites must prevent illicit discharge into the SF combined sewer system.

Appendix A Inlet Location Map

TRANSBAY TRANSIT CENTER
Existing Catch Basin

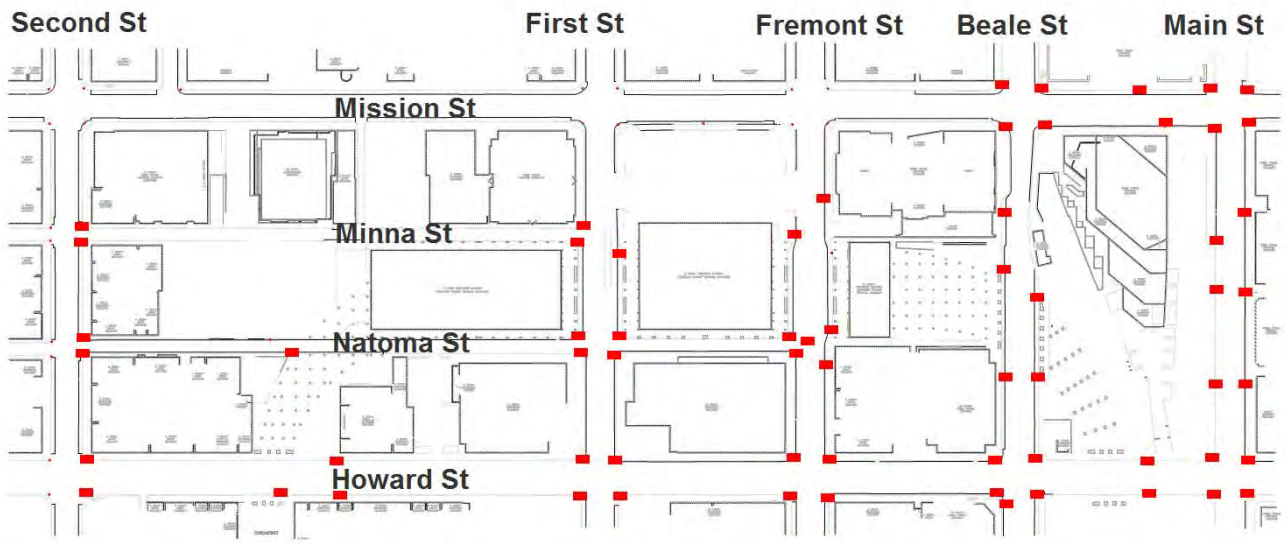

Appendix B Construction Stormwater Controls Monitoring Checklist

CONSTRUCTION STORMWATER CONTROLS MONITORING CHECKLIST

WEBCOR/OBAYASHI TRANSBAY TERMINAL PROJECT

Date: _____

Inspector Name:_____**Description of Inspected Area**:_____

24hr Rainfall Amount: _____Weather Conditions:_____

Name of Trade Subcontractor Representative:_____ **Contact (Cell Phone #)**: _____

Erosion/Sediment Controls	Repairs Needed	OK	Owner of Repair Task	Comments/Date Corrected
Check Dams/Sediment Traps	☐	___	_____	_____
Drainage Swales/Lined Ditches	☐	___	_____	_____
Entrance/Outlet/ Tire Wash	☐	___	_____	_____
Barrier (Sandbag/Gravel Bag)	☐	___	_____	_____
Fiber Rolls/Wattles/ Silt Fence	☐	___	_____	_____
Covers (Geotextile/Fabric/Plastic)	☐	___	_____	_____
Inlet Protection	☐	___	_____	_____
Soil Tackifiers/Dust Control Emulsions	☐	___	_____	_____
Street Sweeping/Vacuuming	☐	___	_____	_____
Other:	☐	___	_____	_____

Good Housekeeping Controls	Repairs Needed	OK	Owner of Repair Task	Comments/Date Corrected
Concrete Washout	☐	___	_____	_____
Dewatering System/Operation	☐	___	_____	_____
Illicit Connection Detection	☐	___	_____	_____
Material Delivery/Storage/Use)	☐	___	_____	_____
Paving and Grinding Operations	☐	___	_____	_____
Pile Driving Operations	☐	___	_____	_____
Sanitary/Septic Waste Management	☐	___	_____	_____
Spill Prevention and Control	☐	___	_____	_____
Equipment Servicing	☐	___	_____	_____
Waste Management	☐	___	_____	_____

Visual Observation of Runoff	Repairs Needed	OK	Owner of Repair Task	Comments/Date Corrected
Sediment Laden/Turbid	☐	___	_____	_____
Oily Sheen	☐	___	_____	_____
Odor	☐	___	_____	_____

Documentation	Repairs Needed	OK	Owner of Repair Task	Comments/Date Corrected
SWPPP on Site	☐	___	_____	_____
BMP materials Stockpiled	☐	___	_____	_____
Spill Control in Compliance	☐	___	_____	_____
Discharge Permit Posted	☐	___	_____	_____
Training Logs Available	☐	___	_____	_____
Inspection Logs Filled Out	☐	___	_____	_____
Other:	☐	___	_____	_____

Comments:_____

_____

_____

Appendix C SFPUC Construction Pollution Prevention Guide

Don't Be Caught Unaware

New Pollution Prevention Requirements for the Construction Industry

Water Pollution Prevention Program
San Francisco Public Utilities Commission
City and County of San Francisco
3801 3rd Street, Suite 600
San Francisco CA, 94124

Keep it on Site

Pollution Prevention Guide

for the

Construction Industry

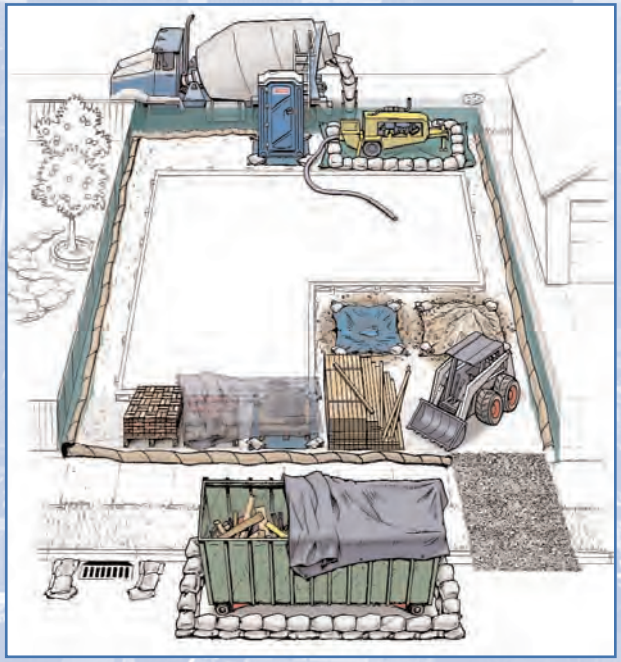

Keep it on Site

The San Francisco Public Utilities Commission (SFPUC) is pleased to announce **Keep it on Site**, as part is its new program to prevent water pollution at construction sites.

Runoff from construction sites is a major source of water pollution, and is subject to requirements such as the development of a stormwater pollution prevention plan, a plan review, stormwater treatment measures, runoff monitoring and increased site inspections.

As part of our Construction Site Water Pollution Prevention Program, this brochure will assist construction professionals understand and comply with the new State and Federal laws. Here, you will find valuable information on methods used on construction sites to keep pollution, such as dirt and construction site debris out of our sewage treatment system and sensitive local water bodies.

We hope to make your job easier while keeping our city clean by providing you with the information to create an efficient and environmentally safe construction site.

Together, we have the ability to preserve the quality of life in San Francisco.

Water Pollution Prevention Program
San Francisco Public Utilities Commission
City and County of San Francisco
3801 3rd Street, Suite 600
San Francisco CA, 94124

Constuction Site Runoff: (415) 695-7310
http://pollutionprevention.sfwater.org

Water Pollution Prevention Program

The goal of the Water Pollution Program is to control pollution at its source in order to protect the Bay, ocean, creeks and lakes.

Useful links about other pollution prevention programs throughout San Francisco:

San Francisco Water Pollution Prevention Program
http://pollutionprevention.sfwater.org

State Water Board
www.waterboards.ca.gov/sanfranciscobay

International BMP Database
www.bmpdatabase.org

California Stormwater Quality Association
www.cabmphandbooks.com

Emergency Phone Numbers

To report illegal dumping of hazardous materials or wastes to the storm drain or sewer system, call San Francisco Water Pollution Prevention Program hotline: (415) 695-2020

Hazardous Spills: 911

Inspection and Enforcement Program

The Construction Site Inspection and Enforcement Program was established to ensure that all businesses operate in compliance with all appropriate stormwater laws and other City requirements. Contractors, site supervisors and property owners can be held responsible for violations, which may lead to a civil penalty of up to $25,000 per day and reimbursing the City for all expenses associated with clean up[1].

Construction materials such as paint, dirt, and trash often find their way into our storm drains,

[1] *San Francisco Sewer Use Ordinance Article 4.1, Public Works Codes*

Best Management Practices

jeopardizing San Francisco's sewer system, and polluting surrounding local water bodies.

Contractors are now required to implement what are known as Best Management Practices (BMPs) on all construction sites. BMPs are methods used to keep pollution out of our storm drains and catch basins and off of City property such as sidewalks, streets, and alleys. Installing and maintaining these BMPs on the construction site is critical to protecting our sensitive water bodies.

If your project is greater than 1 acre, you are required to prepare a formal Stormwater Pollution Prevention Plan (SWPPP). Please contact SFPUC's Environmental Regulation and Management for more information at (415) 695-7310.

The following is a list of BMPs and pollution prevention measures that must be implemented at all construction sites.

- Identify all storm drains and catch basins near the construction site and ensure all workers are aware of their locations to prevent pollutants from entering them.
- Protect all storm drain and catch basin inlets.
- Develop an erosion control and sediment control plan for wind and rain.
- Develop spill response and containment procedures.
- Inspect site regularly to ensure that BMPs are intact.
- Conduct daily site cleanings as needed.
- Educate employees and subcontractors about BMPs.
- Regularly maintain all BMPs at project site.

Best Management Practices

Site Overview

This drawing illustrates Best Management Practices (BMPs) that must be followed at all construction sites in San Francisco.

Preserve existing vegetation

Preserving existing trees and vegetation where possible will prevent erosion.

Paint and Stucco

All paint and stucco materials stored on the site must be contained and covered. It is illegal for contractors to wash out paintbrushes in the street or dump any residues in the sewer or the storm drain. Paintbrushes and spray guns shall be washed/cleaned out into a hazardous materials barrel or put back into its original container and disposed of properly. Latex paint should be dried in its container and placed in the garbage. Oil paint and thinners need to be recycled as hazardous wastes.

Perimeter Controls

Gravel bags, silt fences, and fiber roles are acceptable perimeter controls, and shall be used to surround the entire site. Upstream perimeter controls prevent water from running into your site and downstream controls prevent sediment from leaving your site. Avoid running over perimeter controls with vehicles or heavy equipment, as they can damage the materials. Replace any damaged perimeter controls immediately. Keep extra absorbent materials and/or a wet/dry vacuum on site to quickly pick up unintended spills. Sites must also be checked and maintained daily.

Building Materials / Staging areas

Construction materials must be stored onsite at all times. The only exception is if you have a right-way-permit. Building materials should always be covered when not in use to prevent runoff caused by wind or rain. To apply for a right-of-way permit, contact the Bureau of Streets Use and Mapping at (415) 554-5810.

Storm Drains and Catch Basins

Storm drains must be protected at all times with perimeter controls, such as fiber rolls or gravel bags.

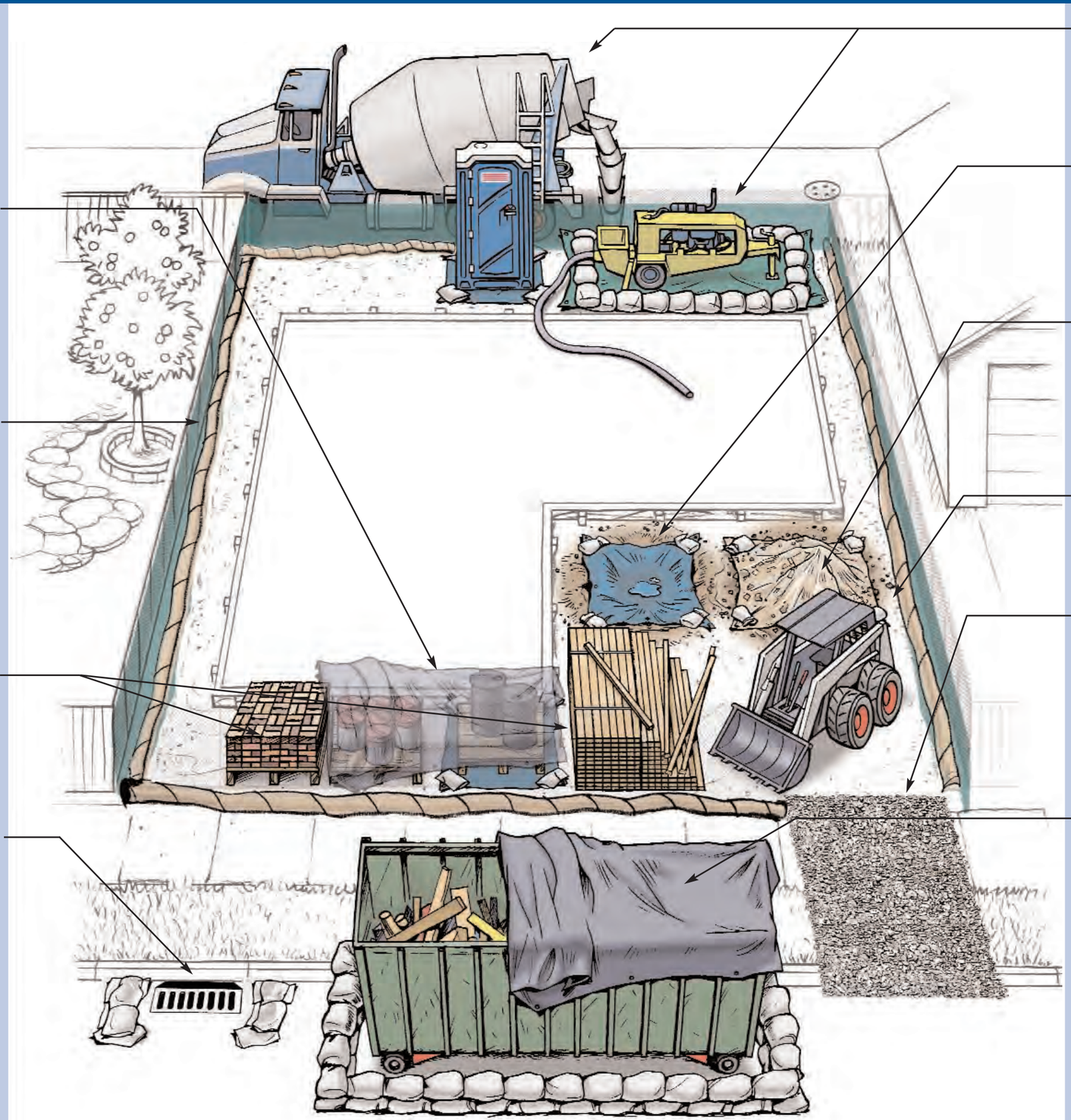

Concrete Trucks / Pumpers

Any concrete pumpers parked in public streets or alleys must be surrounded by perimeter controls, such as berms, gravel bags or fiber rolls. Tarps also must be placed beneath concrete pumpers at all times. Residual materials must be cleaned up as well.

Washout Area

The disposal of "wet" construction materials should be handled in the washout area. This includes paint, stucco, and concrete. Use a gravel bag or fiber roll and tarp to collect evaporation and prevent run-off in nearby areas. The washout area must be checked and maintained daily to ensure compliance.

Dirt and Grading

Mounds of dirt or gravel should be stored on site and covered each day with a tarp. When in use, all exposed dirt piles should be sprayed with water to prevent excessive dust. Tarps must be available and onsite to cover 125% of exposed areas during the rainy season (October-April).

Earthmoving Equipment

All earthmoving equipment should be stored onsite. Maintenance and repair should never be conducted on the site. All tracks and trails left by equipment leading to and from the site should be cleaned up immediately.

Construction site stone or rock access drives

Stone or rock access drives at any construction site should be made of 3-4 inch fractured stone aggregate with a geo-textile liner below the grade of the road. This is to be used by all vehicles to limit tracks of mud onto the streets.

Dewatering Activities

A batch discharge permit is required before releasing any construction site wastewater. Call 415-695-7310 for more information.

Dumpsters

Keep dumpsters covered. Areas around dumpsters should be swept daily.

Water Pollution Prevention Program
San Francisco Public Utilities Commission
City and County of San Francisco
3801 3rd Street, Suite 600
San Francisco CA, 94124
(415) 695-7310

siterunoff@sfwater.org
http://pollutionprevention.sfwater.org

Original artwork and concepts developed by the City of Coronado, CA revised by SFPUC Graphics staff personnel.

Exhibit L

TRANSBAY TRANSIT CENTER

Hazardous Materials Management Plan

Revision 1

March 11, 2011

WEBCOR/OBAYASHI JOINT VENTURE
SAN FRANCISCO, CA

TABLE OF CONTENTS

Hazardous Materials Management Plan
TRANSBAY TRANSIT CENTER
San Francisco, California

Webcor/Obayashi Joint Venture will be responsible for mandating that Hazardous Materials Procedures documents shall be prepared by Trade Subcontractors and also for observing the Trans Bay Transit Center site on a regular basis in keeping with the standard of care for a General Contractor. Webcor/Obayashi Joint Venture will also coordinate the day to day oversight of the Project as a whole, compliance with their contract obligations, the tracking of Trade Subcontractor costs, directing Trade Subcontractors to maintain the Project site in accordance with all applicable regulations, and for discussions with the City regarding compliance concerns. Contracts with Trade Subcontractors and Sub tier Subcontractors shall include a requirement to comply with the provisions of this Plan and to maintain compliance with all applicable City Ordinances and Codes. The Trade Subcontractors, Sub tier Subcontractors and their Project Superintendents for this project are hereby authorized to uphold, certify, and maintain their own Hazardous Materials Procedures Plans and to distribute it to all field personnel responsible for monitoring the site and maintaining compliance with Federal State and local regulations. All subcontractors, field personnel and their assigns that work at the site must conform to the requirements described in this Hazardous Materials Procedures developed for Trade Subcontractor activities and any alterations thereof made at the time and in the manner herein specified, and in all respects according to its intent and meaning, and shall indemnify and hold harmless Webcor Builders-Obayashi, its officers and agents, if failure to conform results in legal action or any other action. Duties of the Trade Subcontractors include but are not limited to:

- Maintaining full compliance with their Hazardous Materials Procedures plan and all City Codes and Ordinances.
- To this effect, the Trade Subcontractors shall have authority to mobilize their own crews for: monitoring and maintenance.
- Obtaining dewatering and other applicable permits necessary for the satisfactory completion of their contract.
- Stopping any construction activity that is in violation of municipal ordinances or codes or that is inconsistent with the provisions of the Trade Subcontractors Hazardous Materials Procedures plan.

The Transbay existing Terminal Building has been demolished and replaced with a multimodal Transit Center that includes an underground rail station. The depth of the excavation will be approximately 65 feet. A soil-cement shoring wall extending approximately 120 feet below ground surface (bgs) will form the perimeter of the Transit Center. A concrete buttress will be placed under the Transit Center adjacent to 301 Mission Street extending down to bedrock, approximately 240 feet.

This HMMP includes the requirement to mitigate potential health and safety (H&S) risks to the environment, workers, and site-user associated with the presence of certain constituents in the soil at the Site.

ENVIRONMENTAL REPORTS

Webcor /Obayashi Joint Venture have reviewed environmental reports prepared for the site. The following is a summary of the previous reports:

Phase I Environmental Site Assessment

The eastern portion of the Site is located in an area historically known as the Tar Flat which was a former industrial area developed during the Gold Rush Era of the 1850's. The Site has been occupied by numerous buildings involved in metal work facilities, foundries, and a coal yard. Also, the San Francisco Gas Light Company was located on the south central and south eastern edge Site. Coal tar waste is believed to have been discharged into the surrounding tidelands which include the eastern portion of the Site. The Transbay Terminal Building was constructed between the years of 1936 ad 1938 and was used as a passenger rail station. In 1958, the train tracks were removed and/or paved over and the Site has been used by buses since. In the 1950's, elevated concrete roadways were built on the Site as part of the Transbay Terminal and the Embarcadero Freeway. The Embarcadero Freeway was damaged during the 1989 Loma Prieta earthquake and was subsequently demolished. Since the 1990's, the Site has remained largely unchanged.

Significant findings included:

- The subsurface fill material at the Site may contain elevated concentrations of heavy metals and other residual petroleum hydrocarbons. These concentrations are likely associated with the presence of 1906 earthquake fill material located below the ground surface. Special soil handling and/or sampling will likely be required during any construction activities.

- Due to the proximity of the former San Francisco Gas and Light Plant (bounded by First, Fremont, Howard, and Natoma Streets) and the presence of manufactured gas by-product waste found on nearby properties, hazardous materials may exist in the subsurface beneath the Site. Special soil handling and/or sampling will likely be required during any construction activity.

- The soil and groundwater near the West section of the Transbay Terminal Building may contain petroleum hydrocarbons and VOCs associated with the former USTs release. Special soil and groundwater handling and/or sampling will likely be required during any construction activities.

Site Investigations

Limited soil and groundwater sampling has been performed beneath the ramps and near the Transbay Terminal building in 1999 and 2008 by Treadwell & Rollo. Also, they performed an Environmental Site Characterization (ESC) in 2009 at the Transbay Terminal which included collecting soil samples of the fill material and underlying sand from 23 exploratory borings, chemical testing of selected samples, and evaluating the results. Treadwell & Rollo collected groundwater grab samples from four of the exploratory borings for chemical analysis. The objective of the ESC was to assess the presence of petroleum hydrocarbon and metal contamination in the soil and groundwater beneath the Site that will be removed and disposed during the proposed construction activities. Concentrations of chemical compounds and metals detected in the soil and groundwater samples were compared to state and federal criteria for hazardous waste and disposal options.

The results of our environmental site characterization and other available subsurface information in the vicinity indicate the Site is generally underlain by approximately 5 to 16 feet of fill material, composed of loose to medium dense silty sand with varying amounts of brick, wood, tar, and glass fragments. The presence of fill material underlying the Site is likely associated with the 1906 earthquake and fire. A sand layer consisting of medium dense to very dense sand with variable amounts of silt approximately 15 to 18 feet thick underlies the fill material. Bay Mud is present beneath the sand layer.

Soil Results

TPHg was detected above the method reporting limit (0.1 mg/kg) in 3 of the 88 samples analyzed at concentrations ranging from 0.29 mg/kg to 26 mg/kg. TPHd was detected above the method reporting limit (2 mg/kg) in 9 of the 87 samples analyzed at concentrations ranging from 2.01 mg/kg to 54.8 mg/kg. TPHmo was detected above the method reporting limit (4 mg/kg) in 49 of the 88 samples

analyzed at concentrations ranging from 4.09 mg/kg to 137 mg/kg. Methylene chloride was detected in 3 of the 14 samples analyzed at concentrations ranging from 0.056 mg/kg to 0.24 mg/kg. No other VOCs were detected at or above methods reporting limits.

Total cyanide was not detected above the method reporting limit (1 mg/kg) in any of the 5 samples analyzed. No SVOCs, Pesticides, PCBs, Sulfide, or Cyanide were detected at or above method reporting limits in the samples analyzed. The pH measured in five samples ranged from 6.70 standard units (S.U.) to 8.66 S.U.

Total lead was detected in each of the samples analyzed at concentrations ranging from 1.2 mg/kg to 1,000 mg/kg (Table 2). Total lead was detected at concentrations at or above 50 mg/kg but below 1,000 mg/kg in 33 soil samples. Each of these soil samples was subsequently run for STLC and TCLP lead to determine soluble lead levels. One soil sample (TR-21-5) matched the State of California hazardous waste criteria of 1,000 mg/kg for total lead and subsequently run for TCLP lead to determine if this soil represents a federal RCRA hazardous waste. The TCLP result was 0.83 milligrams per liter (mg/L) so less than the federal RCRA hazardous waste criteria of 5 mg/L.

STLC lead was detected at or above the method reporting limits in 33 of the 34 samples analyzed at concentrations ranging from 0.13 mg/L to 52.1 mg/L. A total of 19 soil samples exceeded the State of California hazardous waste criteria of 5 mg/L. TCLP lead was detected at or above the method reporting limits in 22 of the 36 samples analyzed at concentrations ranging from 0.13 milligrams per liter (mg/L) to 14.5 mg/L. A total of one soil sample (TR-21-5) exceeded the Federal hazardous waste criteria of 5 mg/L.

The remaining metal concentrations were within normal[1] background ranges found in the western United States with the exception of zinc in sample TR-2-1.5 which was detected at a concentration of 5,600 mg/kg.

Groundwater Results

No oil and grease, TRPH, or SVOCs were detected above method reporting limits in any of the four samples. TSS was detected in all the samples with concentrations ranging from 110 mg/L to 160,000 mg/L. COD was detected in TR-19-GW, TR-20-GW, and TR-24-GW with concentrations of 24 mg/L, 20

[1] "U.S.G.S. Professional Paper 1270, Element Concentrations in Soils and Other Surficial Materials of the Conterminous United States," 1984.

mg/L, and 64 mg/L, respectively. Phenolics were detected in TR-24-GW at a concentration of 0.074 mg/L. TR-19-GW, TR-20-GW, and TR-24-GW were tested for pH with concentrations of 7.41 S.U., 7.07 S.U., and 7.45 S.U., respectively.

Trichloroethylene was detected in TR-8-GW at a concentration of 1.58 mg/L. 1,2,4-trimethylbenzene, 1,3,5-trimethylbenzene, benzene, ethylbenzene, isopropyl benzene, n-propybenzene, styrene, toluene, and total xylenes were detected in TR-19-GW with concentrations of 0.0223 mg/L, 0.00568 mg/L, 0.0251 mg/L, 0.011 mg/L, 0.00561 mg/L, 0.00138 mg/L, 0.00143 mg/L, 0.0171 mg/L, and 0.0591 mg/L, respectively. Methyl tert-butyl ether (MTBE) was detected in TR-20-GW at a concentration of 0.00078 mg/L. Naphthalene was detected in TR-19-GW, TR-20-GW, and TR-24-GW at concentrations of 0.417 mg/L, 0.00371 mg/L, and 0.0548 mg/L, respectively. No other VOCs were detected in any of the samples.

Antimony was detected in TR-20-GW at a concentration of 0.012 mg/L. Arsenic was detected in TR-24-GW at a concentration of 0.024 mg/L. Barium was detected in TR-8-GW, TR-19-GW, TR-20-GW, and TR-24-GW at concentrations of 0.066 mg/L, 0.052 mg/L, 0.085 mg/L, and 0.022 mg/L, respectively. Chromium was detected in TR-8-GW and TR-20-GW at concentrations of 0.032 mg/L and 0.008 mg/L, respectively. Cobalt was detected in TR-8-GW and TR-20-GW at concentrations of 0.011 mg/L and 0.006 mg/L, respectively. Molybdenum was detected in TR-8-GW, TR-20-GW, and TR-24-GW at concentrations of 0.01 mg/L, 0.024 mg/L, and 0.009 mg/L, respectively. Nickel was detected in TR-8-GW, TR-20-GW, and TR-24-GW at concentrations of 0.054 mg/L, 0.052 mg/L, and 0.013 mg/L, respectively. Vanadium was detected in TR-8-GW, TR-19-GW, TR-20-GW, and TR-24-GW at concentrations of 0.032 mg/L, 0.012 mg/L, 0.012 mg/L, and 0.021 mg/L, respectively. Zinc was detected in TR-8-GW, TR-20-GW, and TR-24-GW at concentrations of 1.1 mg/L, 0.013 mg/L, and 0.011 mg/L, respectively. No other metals were detected in any of the samples.

SUBSURFACE CONDITIONS

The results of previous site investigations and other available subsurface information in the vicinity indicate the Site is generally underlain by approximately 5 to 16 feet of fill material, composed of loose to medium dense silty sand with varying amounts of brick, wood, tar, and glass fragments. The presence of fill material underlying the Site is likely associated with the 1906 earthquake and fire. A sand layer consisting of medium dense to very dense sand with variable amounts of silt approximately 15 to 18 feet thick underlies the fill material. Bay Mud is present beneath the sand layer.

Groundwater was encountered at the time of the investigation at depths ranging from 13 to 20 feet bgs. Groundwater levels may fluctuate depending on the season. The groundwater flow direction is likely to the northeast towards San Francisco Bay.

DISCUSSION

Based on the analytical results from the Site subsurface investigation and previous analytical results, some of the fill material contains elevated total and soluble lead levels at concentrations exceeding Federal and State of California hazardous waste criteria. The remaining fill material will most likely be accepted at a regulated Class II and/or Class III landfill. Based on previous environmental investigations at the Site and vicinity, the sand underlying the fill would likely be disposed of as unrestricted waste.

The area of fill material containing soluble lead concentrations exceeding the Federal hazardous waste criteria are near boring TR-21 at a depth of 5 feet bgs. The areas of fill material containing total and soluble lead concentrations exceeding the State of California waste criteria are located near borings TR-1 at depths of 1.5 and 5 feet bgs, TR-2 at depths of 1.5, 3 and 5 feet bgs, TR-4 at depths of 3 and 5 feet bgs, TR-8 at depths of 1.5 and 3 feet bgs, TR-14 at a depth of 3 feet bgs, TR-15 at a depth of 3 feet bgs, TR-16 at a depth of 5 feet bgs and 10 bgs, TR-17 at depths of 1.5, 3 and 5 feet bgs, TR-19 at a depth of 7.5 feet bgs, TR-20 at a depth of 7.5 feet bgs, and TR-21 at a depth of 3 feet bgs. The remaining fill material will be disposed as Class II non-hazardous waste.

Groundwater is encountered at depths ranging from approximately 13 to 20 feet bgs across the Site. The proposed construction activities most likely will encounter groundwater in quantities that will require its removal from the subsurface. Prior to discharge into the sanitary sewer system, the dewatering contractor will obtain a batch groundwater discharge permit from the San Francisco Public Utilities Commission (SFPUC).

Because hazardous materials were detected at the Site, a SMP and a HASP will be required prior to construction. The Subcontractor HASP will outline proper soil handling procedures and H&S requirements to minimize worker and public exposure to hazardous materials during construction.

RECOMMENDATIONS FOR MITIGATIVE ACTIONS

The results of previous environmental investigations at and near the Site indicate the fill material beneath the Site contains elevated concentrations of heavy metals and petroleum hydrocarbons. The presence of these compounds poses soil management and potential H&S issues to be addressed as part of the Site

development activities. The soil management objectives for the Site are to minimize exposure to construction workers at the Site, nearby residents and/or pedestrians, and future users of the Site to constituents in the soil.

Health and Safety Issues

There may be a potential H&S risks associated with the heavy metals and petroleum hydrocarbons detected at the Site. There also may be a potential for this soil to affect construction workers at the Site, nearby residents and/or pedestrians, and future users of the Site. The routes of potential exposure to the petroleum hydrocarbons and metals could be through three pathways: 1) dermal (skin) contact with the soil, 2) inhalation of dusts, and 3) ingestion of the soil.

The most likely potential for human exposure to the petroleum hydrocarbons and metals in the soil will be during soil excavation operations. Because on-site materials contain concentrations of petroleum hydrocarbons and lead in excess of the Proposition 65 guidelines, there is a requirement that appropriate health and safety procedures, as well as warning requirements, be implemented during construction. The trade sub contractor will be responsible for establishing and maintaining proper H&S procedures to minimize worker and public exposure to Site contaminants during construction. Webcor/Obayashi Joint Venture will oversee this process and require the development and implementation of a comprehensive HASP, which should be prepared by a certified industrial hygienist that represents each subcontractor or its sub tier contractor.

The H&S training requirements, i.e. trained in accordance with Section 1910.120 of 29 Code of Federal Regulations (HazWoper training), specific personal hygiene, and monitoring equipment that will be used during construction to protect and verify the H&S of the construction workers and the general public from exposure to constituents in the soil. Air monitoring to evaluate the amount of airborne particles during excavation will be required by the tub trade contractors. All reports will be kept in a central location managed by Webcor/Obayashi Joint Venture.

A representative of Webcor/Obayashi Joint Venture and the Site health and safety officer (HASO) representing the trade subcontractor will be on site at all times during excavation activities to ensure that all health and safety measures are maintained. The Webcor/Obayashi Joint Venture representative or HASO will have authority to direct and stop (if necessary) all construction activities in order to ensure compliance with the HASP.

The purpose of the HASP is to provide field personnel with an understanding of the potential chemical and physical hazards, protection of any off-site receptors, procedures for entering the project Site, H&S procedures, and emergency response to hazards should they occur. All project personnel shall read and adhere to the procedures established in this HASP. A copy of all plans will be kept on site during field activities and will be reviewed and updated as necessary.

The general public will be protected through the following measures maintained by trade subcontractors and monitored by Webcor/Obayashi Joint Venture:

- the Site will be fenced;
- exposed soil at the construction Site will be watered as necessary to prevent visible dust from migrating off-site;
- soil stockpiles will be covered;
- water will be misted or sprayed during the loading of soil onto trucks for off haul;
- trucks transporting contaminated soil will be covered with a tarpaulin or other cover;
- the wheels of the trucks exiting the Site will be cleaned prior to entering public streets;
- public streets will be swept daily if soil is visible; and
- Excavation and loading activities will be suspended if winds exceed 20 miles per hour.

Soil Management

The proposed construction activities will disturb soil during the excavation activities including: soil handling during archeological investigations, shoring wall installation, construction of a buttress for the adjoining 301 Mission Street property, timber pile removal and disposal, utility relocation and the mass excavation for the new Transbay Transit Center. During all excavation activities, dust control measures will be implemented to reduce potential exposure. These measures shall include moisture-conditioning the soil using dust suppressants and covering the exposed soil and stockpiles with weighed down plastic sheeting to prevent exposure of the soil.

Since all the contaminated fill material will be excavated and disposed of off-site, there will be no risk of direct contact with the underlying fill material by future Site users.

The Site's HASP (prepared by the trade sub contractor) will contain additional dust monitoring, action levels, dust control measures, and work stoppage provisions that will be followed during construction activities.

Soil Segregation and Disposal

Before any excavation activities begin at the Site, a TJPA representative shall be provided documentation from the excavation contractor that the accepting landfill facility for the soil from Transbay Terminal project has been provided with and has reviewed all analytical data collected from the Site. TJPA shall approve all off-site disposal facilities and soil transportation contractors, including, without limitation, available insurable coverage, and prior to the shipment of any soil or other waste materials. The TJPA representative will provide testing and schedule the intervals that testing shall occur.

The results of previous soil analytical testing indicate that some of the soil located at the Site will be disposed off-site at a Class I landfill, however additional chemical testing of the soil may be required by the landfill prior to disposal. The excavation contractor shall be responsible for tracking the disposition of soil removed from the Site. Any excavated soil characterized as a hazardous waste shall be tracked using the Uniform Hazardous Waste Manifest System (USEPA Form 8700-22), as applicable. Soil not characterized as a hazardous waste shall be tracked using non-hazardous bills of ladings. All documentation will be provided to TJPA during the excavation activities.

If soil stockpiling of suspected contaminated soil is to be performed, the excavation contractor shall establish appropriate soil stockpile locations on the Site to properly segregate, cover, control dust, profile, and manage the excavated soil. Stockpiled soils are to be placed on top of one layer of 10-mil polyethylene sheeting (or equivalent), such as Visqueen. When stockpiled soil is not actively being handled, top sheeting will be adequately secured so that all surface areas are covered.

Soil Disposition

The Trade Sub contractor will establish appropriate off-site soil disposal locations and direct truck loading scheduling and/or soil stockpile locations on the Site to properly segregate, cover, moisture control, and profile the excavated soil. Soil profiling criteria will ultimately depend on the acceptance criteria of the landfills receiving the soil. These procedures will be established by the excavation contractor and coordinated with the proposed landfills prior to initiating soil excavation. It is not anticipated that soil will be reused at the Site for construction-related activities.

The Webcor Obayashi JV will, on behalf of TJPA, will be responsible for tracking final soil dispositions and turn that information to the TJPA representative. Any excavated soil considered hazardous waste will be tracked using the Uniform Hazardous Waste Manifest System (USEPA Form 8700-22), as applicable. Soil not considered hazardous waste will be tracked using non-hazardous bills of lading. These two systems will be used to comply with appropriate state and local requirements.

The contractor will arrange for transportation of all wastes off-site. Hazardous and non-hazardous waste will be transported to the appropriate disposal facility using a permitted, licensed, and insured transportation company. Transporters of hazardous waste must meet the requirements of 40 CFR 263 and 22 CCR 66263. All trucks transporting bulk hazardous waste will be properly lined and covered with compatible materials. Trucks will be decontaminated prior to any use other than hauling contaminated materials unless the contaminated material was already double-contained. The contractor will be responsible for preparing and submitting traffic control plans for trucks entering and leaving the Site. A decontamination pad location plan and decontamination procedures will be prepared. A route plan will also be prepared showing the expected route each truck will use to reach each landfill.

For soil that is to be exported off-site that is characterized as a hazardous waste, an appropriate USEPA Generator Identification Number will be recorded on the hazardous waste manifests used to document transport of hazardous waste off-site. The hazardous waste transporter, disposal facility, and U.S. Department of Transportation (DOT) waste description required for each manifest will be determined on a case-by-case basis. A description of the number of containers being shipped, the type of container, and the total quantity of waste being shipped will also be included on each manifest.

Webcor/Obayashi Joint Venture representative will be responsible for overseeing the sub trade provides accurate completion of the hazardous waste manifests and nonhazardous bills of lading. Records of all wastes shipped off-site will be maintained by TJPA and will be made available for inspection on request. The final destination of wastes transported off-site will be documented in the Site Closure Report that will be prepared by others.

Soil Sampling

If needed, chemical testing of the stockpiled soil will be performed to profile the soil for disposal. Soil profiling criteria depends on the proposed landfill location or off-site receiving facility. These procedures shall be established by the excavation contractor and coordinated with the proposed landfills prior to initiating soil excavation. Typical soil profiling requirements are one four-point composite sample per 500 to 750 cubic yards to be disposed.

If soil samples are required for analysis, the samples shall be collected by the TJPA representative and tracked.

Timber Pile Removal and Disposal

Part of the foundation system for the Transbay Terminal building includes timber piles beneath the basement slab. During the excavation activities these timber piles will be removed and disposed of. The timber piles will be extracted from the subsurface and as much as possible removal of all the soil which is attached to the timber pile will need to be performed. The extracted timber piles will be segregated, tested by the TJPA representative and transported. If disposed of as a Treated Wood at a Class II non-hazardous waste with copies of the Bill of Ladings will be submitted to TJPA representative.

Underground Storage Tank Removal and Disposal

If a underground storage tank (UST) and/or and associated product lines are found, arrange for a licensed tank removal contractor to properly remove and dispose of the UST. Proper permits and notifications should be in place prior to removing the UST. If soil staining is observed, place the affected soil into a stockpile onto plastic sheets and cover with plastic sheets. The Environmental Consultant will complete soil sampling and analysis tasks for UST closure in accordance with San Francisco Fire Department (SFFD) and SFDPH.

Coal Gasification Residual Material

The former San Francisco Gas Light Company was located on the south central and south eastern edge of the Site. Coal tar waste is believed to have been discharged into the surrounding tidelands which include the eastern portion of the Site. Excavation in this area of the Site will most likely encounter residual coal tar waste. Some of the coal gasification residual material encountered may be former piping, coal tar, phenols, heavy metals, and polynuclear aromatic hydrocarbons. If any coal gasification residual material is encountered during the excavation, the material will be stockpiled onto plastic sheeting and covered with plastic sheeting. The TJPA representative will collect soil samples and analyzed the material to determine proper disposal of the material.

Groundwater Management

Groundwater is encountered at depths ranging from approximately 13 to 20 feet bgs across the Site. The proposed construction activities most likely will encounter groundwater in quantities that will require its removal from the subsurface. Prior to discharge into the sanitary sewer system, the dewatering Trade Subcontractors will obtain a batch groundwater discharge permit from the San Francisco Public Utilities

Commission (SFPUC). Based on analytical results of the groundwater samples analyzed during previous Site investigations, approval of the groundwater discharge from the dewatering system would be granted by SFPUC.

Dust Control

Prior to initiating construction activities, a dust control plan (prepared by Trade Subcontractor and specific to this project) will be implemented to reduce potential exposure during excavation and loading operations. This document will contain measures to protect construction workers and the public including: dust monitoring, action levels, dust control measures, and work stoppage provisions that will be followed during construction activities.

Dust control will be accomplished through implementation of engineering controls, including light water spraying or misting of stockpiled soil, truck loading areas and work areas. Misting or spraying will be performed to sufficiently reduce fugitive dust emissions, but limited to prevent water runoff. Efforts will also be made to minimize the soil drop height from an excavator's bucket onto soil piles or into transport trucks. The site-specific dust control plan will as needed, include some or all of the following procedures: site fencing; wetting soil; analysis of wind direction; dust monitors at the work zone and at the Site perimeter and appropriate record keeping, visible inspection; establishing a hotline for community response; limiting excavation area; soil storage regulations (e.g. covering stockpiles); windbreaks; paving; truck loading requirements (e.g. covering vehicles or excavator bucket drop heights); Site vehicle speed limits; wheel washing; street sweeping; termination of excavation if winds exceed 20 mph; and/or addition of soil stabilizers; or other responses as needed.

Contingency Procedures

Hazardous materials including; sumps and/or vaults, asbestos piping, former monitoring wells, and soil with petroleum hydrocarbon odors and/or stains may be encountered during excavation activities. If unanticipated hazardous materials are encountered, the following procedures will be maintained by trade subcontractors and monitored by Webcor/Obayashi Joint Venture:

- stop work in the area where the suspect material was encountered and cover it with plastic sheets;
- notify the Webcor/Obayashi Joint Venture representative, the TJPA Environmental Consultant for Site a inspection and appropriate action in the suspect area; and
- review the existing H&S plan and make revisions, if necessary; and

- Have appropriately trained personnel on Site to work with the affected materials, once directed by Webcor/Obayashi Joint Venture.

If a sump and/or vaults are encountered during excavation activities, contact the TJPA Environmental Consultant for inspection and appropriate action. If no liquid, obvious staining or odors are observed, sump and/or vaults will likely be destroyed and disposed of. If liquid is present within the sump and/or vault and/or obvious staining and odors are observed, the TJPA, Environmental Consultant will collect samples for analyses to determine how to properly disposal of the material.

If stained soil or odors are observed, plastic sheeting will be placed over the affected area and the TJPA Environmental Consultant will be contacted for inspection and appropriate action. If the material is to be excavated, the material will be stockpiled onto plastic sheeting and covered with plastic sheeting. Soil samples will be collected and analyzed to determine proper disposal of the material.

REFERENCES

Site Mitigation Plan Transbay Transit Center: Treadwell & Rollo, Inc. dated March 2010.

Exhibit M

Request and Answers Log

Webcor/Obayashi Joint Venture

PROJECT MANAGEMENT - REQUEST AND ANSWERS LOG

30100 - Transbay Transit Center Project

Number	Subject	Status	Date Created	Date Required	Date Answered	Cost Impact	Proceed
T-0001	**Article 6 Changes in Work - Clarification**	**Closed**	**10/11/2010**	**10/25/2010**	**11/03/2010**	**Potentially**	☐

From: Webcor Construction LP Joanne Filipas **To:** Turner Construction Compan Daphne Faulkner **Answered By:** Turner Construction Comp Daphne Faulkner

Co-Author:

REQUEST:

Reference: Spec Section 00 07 00, Article 6 - Clarifications and Changes in Work

Article 6 in the General Condition specification section 00 07 00 defines the procedure for changes in work. The procedures defined throughout Article 6 are conflicting. According to section 6.01.A, CM/GC shall promptly comply and proceed with changes issued by the TJPA in the form of a Change Order or Field Order. Section 6.02.B states that the TJPA will respond to RFI's with written Clarification deemed necessary and consistent with the Contract Documents or a Field Order requiring minor changes in work. Per section 6.01.A, the CM/GC is to proceed with the Field Order immediately. However, according to section 6.03.A, CM/GC shall submit a Change Order Request within 21 days of written directive. Please advise if the CM/GC is to proceed with changes promptly and prior to approval or if the CM/GC shall receive approval prior to proceeding with any changed Work.

SUGGESTION:

ANSWER: **Accept Suggestion:** ☐

00 07 00 - 6.01.A specifies that, "TJPA may..order additions, deletions, or revisions in the Work by Change Order or Field Order, CM/GC shall promptly comply with such orders and proceed with the Work,.." [emphasis added]. Under paragraph 6.02.B, TJPA may issue a Field Order in response to an RFI submitted by CM/GC. Under paragraph 6.03A, the CM/GC must submit a COR within 21 days if in the opinion of the CM/GC, the Field Order is considered to be a Change to the Contract.

Therefore, TJPA expects the CM/GC promptly to proceed with Work as may be clarified or directed through a Field Order, unless instructed otherwise. CM/GC has the recourse of submitting a COR when appropriate to do so, within the time limit stipulated. To avoid confusion, TJPA's Field Orders will clearly state whether the CM/GC is required to carry out the instruction promptly. Nevertheless, the CM/GC shall whenever possible incorporate a Field Order directive into the Work with minimal disruption to the planned sequence of activities.

T-0002	**Transit Center Building Address Clarification**	**Closed**	**10/20/2010**	**11/03/2010**	**10/28/2010**	**Potentially**	☐

From: Webcor/Obayashi Joint Venture Joanne Filipas **To:** Turner Construction Compan Daphne Faulkner **Answered By:** Transbay PMPC Alfred Lau

Co-Author:

REQUEST:

Please clarify the building address for the Transbay Transit Center. This is required to complete our site specific Click Safety program, complete insurance documents, etc.

SUGGESTION:

ANSWER: **Accept Suggestion:** ☐

425 Mission Street, San Francisco, CA 94105

Answered by Alfred Lau
TJPA (PMPC)
10/28/2010

Constructware RFI #T-0003

T-0003	**301 Mission Wall Specification Format**	**Closed**	**11/17/2010**	**12/01/2010**	**11/23/2010**	**Potentially**	☐

From: Webcor Construction LP David Hungerford **To:** Turner Construction Compan Michelle Smith **Answered By:** Turner Construction Comp Kevin Chiu

Number	Subject	Status	Date Created	Date Required	Date Answered	Cost Impact	Proceed

Co-Author:

REQUEST:

Reference Sheet: C-0001 issued 11/04/10; 301 Mission Interim Screen Wall - General Notes

We are in the process of preparing submittals for this project. In doing so we would like to know what specification division format would be most appropriate for us to submit and track these project documents. Please provide us with the desired specification division format as soon as possible so that our submittals can be processed with the proper efficiency.

SUGGESTION:

ANSWER: **Accept Suggestion:** ☐

All submittals for the 301 Mission Interim Screen Wall shall be submitted under the new CSI Division, "301 Mission Interim Screen Wall," that has been created and is available in Constructware under Transit Center Building (140). Within CSI Division "301 Mission Interim Screen Wall," there is a list of available "spec sections" that are equal to the drawing sheet number (and paragraph heading as applicable) that the submittal is called out on.
If there are multiple "spec sections" on one sheet, the suffix ".X" has been added. For example, "S-0001.5 Concrete and Reinforcing" shall contain all submittals found on sheet S-0001 under the heading "Concrete and Reinforcing."
If there is no suffix , the description of the spec is simply the title of the drawing.

Number	Subject	Status	Date Created	Date Required	Date Answered	Cost Impact	Proceed
T-0004	**Transbay Project Signs**	**Closed**	**12/01/2010**	**12/15/2010**	**12/03/2010**	**Potentially**	☐

From: Webcor Construction LP David Hungerford **To:** Turner Construction Compan Daphne Faulkner **Answered By:** Transbay PMPC Alfred Lau

Co-Author:

REQUEST:

Spec Section: 01 15 01

Webcor/Obayashi is initiating project sign procurement per Spec 01 15 01 and will require the artwork and locations for four 4x8 post mounted signs. What are required graphics/logo's for sign fabrication and where shall each sign be located.

SUGGESTION:

ANSWER: **Accept Suggestion:** ☐

Graphics for Project ID Signs specified per 01 15 01 will be issued to CMGC as soon as the names for mayor and SFCTA Board members are confirmed in early January, 2011. Information for locations will be issued prior to installation.

Number	Subject	Status	Date Created	Date Required	Date Answered	Cost Impact	Proceed
T-0004.1	**Transbay Project Signs**	**Closed**	**04/01/2011**	**04/11/2011**	**04/12/2011**	**Potentially**	☐

From: Webcor Construction LP David Hungerford **To:** Turner Construction Compan Daphne Faulkner **Answered By:** Transbay PMPC Alfred Lau

Co-Author:

Webcor/Obayashi Joint Venture

PROJECT MANAGEMENT - REQUEST AND ANSWERS LOG

30100 - Transbay Transit Center Project

Number	Subject	Status	Date Created	Date Required	Date Answered	Cost Impact	Proceed

REQUEST:

Reference: RFI T-0004
Spec Section: 01 15 01

Response to RFI T-0004 read "Graphics for Project ID Signs specified per 01 15 01 will be issued to CMGC as soon as the names for mayor and SFCTA Board members are confirmed in early January, 2011. Information for locations will be issued prior to installation."

In a follow up to this RFI, Webcor/Obayashi's is initiating project sign procurement and will require the artwork and locations for four 4x8 post mounted signs. What are required graphics/logo's for sign fabrication and where shall each sign be located.

SUGGESTION:

ANSWER: **Accept Suggestion:** ☐

Unfortunately that the name for one of the TJPA Board seat (PJP seat) is still not confirmed at this time, and it may be at least another month before that can be resolved. TJPA/PMPC will ensure this issue is resolved as expedited as possible and inform the Contractor immediately after the information is anounced.

T-0005 **Incorporation of Trade Subcontractor Schedule Submittals** **Closed** **12/03/2010** **12/13/2010** **12/07/2010** **Potentially** ☐

From: Webcor/Obayashi Joint Venture Jim Tomaszewski **To:** Turner Construction Compan Daphne Faulkner **Answered By:** Transbay PMPC Jim Coughlin

Co-Author:

REQUEST:

Spec Section: 01 13 10 & 01 1310

For TJPA convenience W/O requests that Trade Subcontractor Schedules (Section 01 13 10, 1.2.B) be incorporated into the Monthly Schedule Report (Section 01 13 10, 1.5.A) for the month following issuance of NTP for the specified trade package. A detailed section of the Narrative will be clearly identified and contain all of the narrative requirements of Section 01 13 10, 1.2.B.

SUGGESTION:

ANSWER: **Accept Suggestion:** ☐

Spec Section 01 13 10, 1.2.B will be revised to relax the requirement to include a schedule narrative in the first schedule submittal that is due 15 days after award. However, the 15 day requirement to submit a construction schedule will remain. Spec Section 01 13 10, 1.5.D will also be revised to clarify the requirements of the schedule narrative

---

T-0006 **301 Mission Wall Plywood Wall Barrier Proposal** **Closed** **12/08/2010** **12/18/2010** **12/17/2010** **Potentially** ☐

From: Webcor Construction LP David Hungerford **To:** Turner Construction Compan Daphne Faulkner **Answered By:** Turner Construction Comp Jack Adams

Co-Author:

REQUEST:

Reference: C-5000 and attached sketch

During the Fremont Shoring/301 Mission Wall Coordination Meeting on 12-7-10, it was proposed that a

SUGGESTION:

ANSWER: **Accept Suggestion:** ☐

Plywood barrier wall be erected in lieu of the triton barrier as agreed to in the meeting with Millennium Partners. The 8' tall plywood barrier wall shall be constructed in segments such that it can be pushed

Number	Subject	Status	Date Created	Date Required	Date Answered	Cost Impact	Proceed

plywood barrier wall be erected in lieu of the triton barrier shown on sheet C-5000 of the 301 Mission Street Interim Screen Wall drawings. This plywood barrier will block the view of the 301 Mission tenants and will allow for the early demolition of the existing screen wall (prior to the construction of the new "interim" screen wall). By doing this it will enable the demolition contractor to start the removal of the deep footings earlier than currently scheduled.

In addition, the deletion of the triton barrier will provide approximately 2' of additional driveway width for 301 Mission. Please review the attached preliminary sketch of the above mentioned plywood barrier and provide engineering/architectural comments and mark ups.

against the new screen wall at the end of each week to accommodate parking. While in position during working hours it will be mechanically fastened to the pavers and to the structure on the back side in order to prevent it from overturning. The exterior face of the wall will be painted "jet mist" to match the existing wall stone. Pilasters will also be painted on the plywood to match the stucco on the existing wall.

W-O will submit a dimensioned sketch drawing with plan, elevation and bracing details to be submitted by your subcontractor once he has completed design and before he begins construction.

T-0007 **Field Order #2 - Issued for Programwide** **Closed** **12/08/2010** **12/18/2010** **12/13/2010** **Potentially** ☐

From: Webcor Construction LP Joanne Filipas **To:** Turner Construction Compan Daphne Faulkner **Answered By:** Transbay PMPC Alfred Lau

Co-Author:

REQUEST:

According to today's OAC meeting, the documents issued with FO#W0-002 are intended for project-wide review and not exclusively for the "BSE Contract" as stated in the Field Order. Please confirm.

SUGGESTION:

ANSWER: **Accept Suggestion:** ☐

All Field Orders issued by TJPA and TJPA Representative to CM/GC in accordance with 00 07 00 are for the complete scope performed by CM/GC. It is CM/GC¿s responsibility to direct the requirements to the appropriate trade subcontractors. WO-002 has been re-issued as WO-002R1 on 09DEC2010 with appropriate language to clarify this issue.

T-0008 **Specification Section 00 04 82 Cert. of Bidder Regarding Debarment and Suspensi** **Closed** **12/08/2010** **12/18/2010** **12/10/2010** **Potentially** ☐

From: Webcor Construction LP Joanne Filipas **To:** Turner Construction Compan Daphne Faulkner **Answered By:** Transbay PMPC Alfred Lau

Co-Author:

REQUEST:

Per the TJPA, specification section 00 04 82, Certification of Bidder Regarding Debarment and Suspension, shall no

SUGGESTION:

ANSWER: **Accept Suggestion:** ☐

Section 00 04 82 ¿ Certification of Bidder Regarding Debarment and Suspension reflects the City

Number	Subject	Status	Date Created	Date Required	Date Answered	Cost Impact	Proceed

longer be used. Please confirm.

If this is in fact true, please confirm this section will be removed from the project specifications.

procurement requirement. With the current project funding arrangement, meeting USDOT procurement is needed, Section 00 08 13/APA - 25 ¿ Certification Regarding Debarment, Suspension, and Other Responsibility Matters will be used in lieu of 00 04 82, and 00 04 82 will be deleted per Field Order WO-01, which is expected to be issued this week.

T-0009 **301 Mission Wall Storage Location for Planter Boxes of 301 Mission Wall** **Closed** **12/10/2010** **12/20/2010** **12/13/2010** **Potentially** ☐

From: Webcor Construction LP David Hungerford **To:** Turner Construction Compan Daphne Faulkner **Answered By:** Transbay PMPC Alfred Lau

Co-Author:

REQUEST:

Reference: 301 Mission Interim Screen Wall Drawings Sheet C-1000

On sheet C-1000, there is a note for the (E) Planter boxes that says "(e) precast planter box (typ) to be remove and stored". Please designate a location for storing the (E) planter boxes.

SUGGESTION:

ANSWER: **Accept Suggestion:** ☐

The planter boxes are to be stored for re-use in front of the final screen wall. The timing of construction for the final wall needs to be after the train box is complete, but does not have to wait until the new Transbay Terminal is open for bus operations. Millennium did not agree to providing storage on their property.

Please provide for space on Lot M to store the boxes and inform the contractor accordingly.

T-0009.1 **301 Mission Wall Storage Location for Planter Boxes of 301 Mission Wall** **Closed** **12/17/2010** **12/27/2010** **12/29/2010** **Potentially** ☐

From: Webcor Construction LP David Hungerford **To:** Turner Construction Compan Daphne Faulkner **Answered By:** Turner Construction Comp Jack Adams

Co-Author:

REQUEST:

In Transworld's review of the existing planter box condition at the 301 Mission Screen Wall, Transworld's viewpoint after close inspection of the site is that the planter boxes were originally installed with the intent of being permenant fixtures. There are connection points for these planter boxes that appear to be initial anchor points for original

SUGGESTION:

ANSWER: **Accept Suggestion:** ☐

The intent is to salvage and store these boxes in lieu of replacing them with new ones. Per Contract Drawing C-2000 Contractor is to cut and cap all existing irrigation and electrical lines feeding planter boxes. Contractor can remove plants and dirt if needed to uncover and remove anchorage, then

Number	Subject	Status	Date Created	Date Required	Date Answered	Cost Impact	Proceed

placement of these fixtures and there is concern that these planter boxes were never intended to be reinstalled/relocated after the initial installation. With all do skill and care, Transworld intends to relocate these planter boxes with mininmal damage. As a point of advisement, since these boxes do not appear to be designed for relocation, Transworld is concerned that such action will render these boxes unuseful. Please confirm that the design is to relocate these boxes in lieu of replacing them with new ones.

salvage precast planter boxes.

T-0010 **EPA Permit Number** **Closed** **12/15/2010** **12/25/2010** **12/16/2010** **Potentially** ☐

From: Webcor Construction LP Joanne Filipas **To:** Turner Construction Compan Daphne Faulkner **Answered By:** Transbay Joint Powers Au Edmond Sum

Co-Author:

REQUEST:

Please confirm the EPA permit number is CAR000197558.

SUGGESTION:

ANSWER: **Accept Suggestion:** ☐

Confirmed, the EPA identification number to use on waste manifests for the Transit Center construction is CAR 000197558. The site address is 425 Mission Street, San Francisco, CA 94105. The generator and primary contact is Edmond Sum, Engineering Manager, with the Transbay Joint Powers Authority.

T-0011 **301 Mission Wall Waterproofing Submittal** **Closed** **12/21/2010** **12/31/2010** **12/29/2010** **Potentially** ☐

From: Webcor Construction LP David Hungerford **To:** Turner Construction Compan Kevin Chiu **Answered By:** Turner Construction Comp Jack Adams

Co-Author:

REQUEST:

Regarding the waterproofing submittal, since the driveway is still covered with pavers the existing material and application procedure is unknown to Transworld. Therefore a submittal which matches the existing condition can not be provided until Transworld knows additional information. Please confirm that it is acceptable to defer the waterproofing submittal until after the material is exposed and the existing waterproofing material and application method is determined or provide the specific type of

SUGGESTION:

ANSWER: **Accept Suggestion:** ☐

Confirmed: Webcor-Obayashi/Transworld can defer the waterproofing submittal until after the material is exposed and the existing waterproofing material and application method is determined.

Number	Subject	Status	Date Created	Date Required	Date Answered	Cost Impact	Proceed

material and application method required.

T-0012 **301 Mission Wall - Requesting Specifications for Utility Plug** **Closed** **12/21/2010** **12/31/2010** **01/04/2011** **Potentially** ☐

From: Webcor Construction LP David Hungerford **To:** Turner Construction Compan Kevin Chiu **Answered By:** URS Corporation David Fyfe

Co-Author:

REQUEST:

Reference: 301 Mission Wall Drawings sheet C-5000

There is not enough information to determine the material and dimensions for the utility plug at the 301 Mission Wall. Please provide specifications and product data for the "Utility Plug" on sheet C-5000, sheet note 5.

SUGGESTION:

ANSWER: **Accept Suggestion:** ☐

Contractor to determine dimensions of temporary plug in the field and propose material appropriate to meet the requirements specified in note 5 on sheet C-5000.

T-0013 **BSE IFC Table of Contents Discrepancy** **Closed** **01/05/2011** **01/15/2011** **01/11/2011** **Potentially** ☐

From: Webcor Construction LP Joanne Filipas **To:** Turner Construction Compan Daphne Faulkner **Answered By:** Transbay PMPC Alfred Lau

Co-Author:

REQUEST:

Ref IFC TOC dated 12/15/10 (attached)

We have received the revised Issued for Construction (IFC) drawings and specifications for the BSE package. The table of contents has check marks to indicate added specification sections. Specification section 02 41 19, Pile Removal is not noted with a check mark but a revised specification was issued. The excavation and backfilll (31 23 10) section was not re-issued, however, a check mark is next to it.

Also, the revision logs at the end of each section need to be revised to show only the revision number and dates.

Please advise and re-issue.

SUGGESTION:

ANSWER: **Accept Suggestion:** ☐

1. 00 01 10 Rev 3 and 00 01 15 were released to W/O on 07JAN2011, rectifying issues cited in the RFI.

2. Since it is TJPA/PMPC's opinion that the formatting of the revision box for the technical sections is adequate and appropriate as is. Change to match the abbreviated version of the Div. 00 and 01 sections should be formally requested by W/O such that Design Team and TJPA/PMPC could fully review that and agreed to from a QA/QC point of view.

T-0014 **TG03 BSE IFC Drawing Set** **Closed** **01/06/2011** **01/16/2011** **01/07/2011** **Potentially** ☐

From: Webcor/Obayashi Joint Venture Masashi Kojima **To:** Turner Construction Compan Daphne Faulkner **Answered By:** Transbay PMPC Alfred Lau

Number	Subject	Status	Date Created	Date Required	Date Answered	Cost Impact	Proceed

Co-Author:

REQUEST:

We received multiple versions of PDF Drawings G-0000, A-0000, A-0005, and A-0010 (see the attached images) for TG03 IFC Drawing Set.
Please confirm the following answer from PMPC via email on 1/5/2011.
"Use the 1/3/2011 CD for the PDF files. Use the 1/4/2011 CD for the DWG and DWF files. Disregard the PDFs on the 1/4/2011 CD."

SUGGESTION:

ANSWER: **Accept Suggestion:** ☐

Confirm that "Use the 1/3/2011 CD for the PDF files. Use the 1/4/2011 CD for
the DWG and DWF files. Disregard the PDFs on the 1/4/2011 CD."

T-0015 **301 Mission Wall - Concrete Mix Design** **Closed** **01/07/2011** **01/17/2011** **01/13/2011** **Potentially** ☐

From: Webcor Construction LP David Hungerford **To:** Turner Construction Compan Kevin Chiu **Answered By:** URS Corporation David Fyfe

Co-Author:

REQUEST:

Reference: Attached submittal package TG1901-001 review comments and letter from concrete supplier

Per the comments received on the concrete mix design submitted in submittal package TG1901-001, please confirm that the admixture for air entrainment shall be compliant with ASTM C260.

Transworld has been informed by their concrete supplier that ASTM C260 requires a mix of 6% air entrainment and such amounts of air entrainment are specified only in freeze/thaw areas for durability. The Bay Area is generally not considered a freeze/thaw area and therefore a mix with 6% air entrainment is not typically used. The concrete supplier, Bode Concrete, has provided a letter from BASF related to this specific issue.

SUGGESTION:

ANSWER: **Accept Suggestion:** ☐

Comply with contract documents "Concrete and Reinforcing" Note number 6 on Sheet S-0001, which states:

"Maximum water/cement ratio shall not exceed 0.45 by weight, slump shall be two to six (2"-6") inches. A water reducer or superplasticizer may be added on site after the slump is verified by inspector. Entrained Air: 6% +/- 1-1/2% for durability."

T-0016 **BSE - Current Trainbox Structural Drawings** **Closed** **01/14/2011** **01/24/2011** **01/18/2011** **Potentially** ☐

From: Webcor/Obayashi Joint Venture Masashi Kojima **To:** Turner Construction Compan Daphne Faulkner **Answered By:** Adamson Associates, Inc George Metzger

Co-Author: Balfour Beatty Infrastructure, Inc. Ural Yal

REQUEST:

In order to accurately design and locate elements of the bracing, trestle and bridges, please provide the most up-to-date and reliable architectural and structural drawings

SUGGESTION:

ANSWER: **Accept Suggestion:** ☐

See Issued for Construction - Buttress/Shoring/Excavation documents dated 12/10/10.

Number	Subject	Status	Date Created	Date Required	Date Answered	Cost Impact	Proceed

(including cad files). Also, drawings (including CAD files) of the train box and any other component of the transit center that has the potential to conflict with the BSE scope of work.

T-0017 **BSE - CDSM Wall Alignment** **Closed** **01/14/2011** **01/24/2011** **01/21/2011** **Potentially** ☐

From: Webcor/Obayashi Joint Venture Masashi Kojima **To:** Turner Construction Compan Daphne Faulkner **Answered By:** Adamson Associates, Inc George Metzger

Co-Author: Balfour Beatty Infrastructure, Inc. Ural Yal

REQUEST:

The response to pre-bid RFI #177 indicated that the CDSM shoring line alignment is expected to change "prior to installation". We request the revised re-alignment be provided to us as soon as possible. We are currently designing and issuing steel mill orders based on the current alignment. If the revision comes after mill orders are finalized we risk missing our rolling schedule thereby losing our bid date pricing.

SUGGESTION:

ANSWER: **Accept Suggestion:** ☐

Per TJPA's direction, the Trainbox plan and extent have been modified at the Southwest corner of the site. See the attached sketch SKGT-0001-R1, that show the revised shoring wall alignment.
For your reference, see the attached structural sketches that indicate the revised in-progress Trainbox structural columns and shearwalls that will be issued for construction in the future. These sketches are: SKS -0088 Foundation Level - Zone 02 Plan Phase 1, SKS- 0089 Foundation Level - Zone 03 Plan Phase 1, SKS-0090 Foundation Level - Zone 07 Plan Phase 1, SKS-0091 Foundation Level - Zone 10 Plan Phase 1, and SKS-0092 Lower Concourse Level - Partial Plans Phase 1.

T-0017.1 **BSE - CDSM South Wall Alignment Construction Drawings** **Closed** **09/22/2011** **10/02/2011** **10/04/2011** **Potentially** ☐

From: Webcor Construction LP Joanne Filipas **To:** Turner Construction Compan Gary Krutsch **Answered By:** Adamson Associates, Inc George Metzger

Co-Author:

REQUEST:

Reference RFI T-0017 and attached Sketches

Please confirm the attached sketches issued and approved with CR T-005B are "For Construction" and the notes indicating "draft in progress" and "not for regulatory approval, permitting or construction" will be removed on a future issuance of these sheets.

SUGGESTION:

ANSWER: **Accept Suggestion:** ☐

The sketches attached to previous RFI's reflect the confirmed CDSM shoring alignment.

Text indicating "draft in progress" and "not for regulatory approval, permitting or construction" shall not be transferred to revised "Issued for Construction" drawings.

Documents that are included in Change Orders shall

Number	Subject	Status	Date Created	Date Required	Date Answered	Cost Impact	Proceed

be considered a Contract Document.

T-0018 **BSE - Waler to CDSM Wall spacing** **Closed** **01/14/2011** **01/24/2011** **01/24/2011** **Potentially** ☐

From: Webcor/Obayashi Joint Venture Masashi Kojima **To:** Turner Construction Compan Daphne Faulkner **Answered By:** Adamson Associates, Inc George Metzger

Co-Author: Balfour Beatty Infrastructure, Inc. Ural Yal

REQUEST:

There may be a potential conflict with the walers and the train box reinforcement. Spec 31-55-00 allows 6" minimum spacing from CDSM Wall to face of waler, but based upon Balfour Beatty past experience with a very similar situation, it is felt that the 6" space is not sufficient because of the following:

1. There does not appear to be enough room between the bottom of the waler and the CJ for a lap splice of the vertical reinforcing as depicted on sheet S -3201. Reference the attached drawing.
2. The 6" gap is difficult to snake reinforcement through without damaging the waterproofing attached to the wall.

BBI recommends making the space between the face of the CDSM wall and the waler equal to the wall thickness. This would eliminate conflicts with the rebar and walers, reduce reinforcement splicing and reinforcing congestion.

Additionally attached is an example where the space behind the waler was equal to the wall thickness.

Please advise whether to continue the design with the current 6" minimum space or advise if the space increases.

SUGGESTION:

ANSWER: **Accept Suggestion:** ☐

Thornton Tomasetti Response: It is permissible to use mechanical couplers for the vertical reinforcement interrupted by the whaler for the condition where whaler is 6" min away from CDSM wall.
The proposed increase in whaler to CDSM wall spacing concept is acceptable by TT regarding the Trainbox wall, pending Arup's evaluation/comments. Submit details of revised scheme for review.
ARUP Response: The design team cannot comment on the impact of the Contractor's proposal, without seeing more details of the shoring wall internal bracing system and associated proposed details.
Adamson Associates Response: The proposal cannot be evaluated based on the limited documents submitted. However, it appears that the bracing and attachments shown in the drawing attached to this RFI will need to be modified to allow for the waterproofing system to be appropriately installed as the Wale system is removed.

T-0019 **301 Mission Wall - Stone Panel Anchorage to 301 Mission's Screen Wall** **Closed** **01/18/2011** **01/28/2011** **01/31/2011** **Potentially** ☐

From: Webcor Construction LP David Hungerford **To:** Turner Construction Compan Kevin Chiu **Answered By:** URS Corporation David Fyfe

Co-Author:

REQUEST:

Reference: Attached pages from the 2008 Building Code

SUGGESTION:

ANSWER: **Accept Suggestion:** ☐

Proposed anchorage system can not be evaluated

Number	Subject	Status	Date Created	Date Required	Date Answered	Cost Impact	Proceed

After removing stone panels in the demolition of the original 301 Mission Wall, the existing system of the stone panels does not utilize an anchoring system for mounting the stone panels to the wall. In addition, section 6.2.2.4 of the 2008 Building code does not specify mechanical fasteners for masonry less than 2-5/8" thick. The stone thickness used on the new wall will match the thickness of the existing, which is approx 10mm thick. Therefore, according to section 6.3 of the 2008 Building Code, the stone panel system for the Transbay Interim Screen Wall that should be used is the adhesion application.

Please confirm that Transworld can use the adhered method for the stone panels in lieu of mechanical fasteners.

prior to inspection of the retained stone sample.

Please provide retained samples of stone from the demolished 301 Mission Street Screen Wall in order to confirm dimensions of the existing stone and evaluate proposed anchorage system.

T-0019.1 | **301 Mission Wall - Stone Panel Anchorage to 301 Mission's Screen Wall** | **Closed** | **02/07/2011** | **02/17/2011** | **02/10/2011** | **Potentially** ☐

From: Webcor Construction LP David Hungerford **To:** Turner Construction Compan Kevin Chiu **Answered By:** URS Corporation David Fyfe

Co-Author:

REQUEST:

Reference: RFI T-0019 and attached photos

RFI T-0019 requested samples of stone from the demolished 301 Mission Street Screen Wall in order to verify thickness of the stone that will be used on the wall, and confirm that a mechanical system had not been used to mount the stone. A sample has been shown to URS and pictures of that sample are attached to this RFI. Please confirm that mechanically fastened panels are not necessary and that a thin set adhesive application will be an acceptable means to setting the stone on the new screen wall.

SUGGESTION:

ANSWER: **Accept Suggestion:** ☐

Mechanical fastening of matching stone panels is not required. Location of face of stone as shown on A-6000 detail D is a contract requirement. Please provide complete detailing of proposed attachment of stone and how the location of the face of stone will be achieved using thinset.

T-0020 | **BSE - Demo Contract Shoring Wall and Bracing** | **Closed** | **01/27/2011** | **02/07/2011** | **02/02/2011** | **Potentially** ☐

From: Webcor Construction LP Nhi Tran **To:** Turner Construction Compan Daphne Faulkner **Answered By:** Turner Construction Comp Daphne Faulkner

Co-Author: Balfour Beatty Infrastructure, Inc. Ural Yal

Number	Subject	Status	Date Created	Date Required	Date Answered	Cost Impact	Proceed

REQUEST:

Reference Sheet D-2203 and Specification Section 02 41 01

The BSE contract drawings shows a temporary shoring and bracing that is installed by the demo contract and subsequently removed by the BSE contract. In order for Balfour Beatty to properly plan their work, they request the following information:

1 - The shoring design drawings for the shoring wall on the east side of Fremont St. (shown on D-2203) that was submitted by the Demo Contractor.

2 - As-built location of the above mentioned shoring wall.

3 - Bracing drawings and details that submitted for the basement wall rakers that are schematically shown on detail 1 of sheet D-5100 and details 1 & 2 on sheet D-5102

SUGGESTION:

ANSWER: **Accept Suggestion:** ☐

1 - Approved Shop Drawings Submital #312000-01.3 - Interim Shoring Wall REV 3 will be transmitted through Constructware today 2/2/11.

2 - Wall is currently being constructed in the location indicated on the approved shop drawings.

3 - Bracing drawings are not currently available for transmission. They will be transmitted to W/O when available.

T-0021 **BSE - Existing Unknown Concrete Wall** **Closed** **01/27/2011** **02/07/2011** **02/04/2011** **Potentially** ☐

From: Webcor Construction LP Nhi Tran
To: Turner Construction Compan Daphne Faulkner
Answered By: URS Corporation David Fyfe
Co-Author: Balfour Beatty Infrastructure, Inc. Ural Yal

REQUEST:

Reference Drawing Set D and Specification Section 02 41 01

Based upon Balfour Beatty observations of the site, there appears to be a concrete wall approximately 18in wide that is outside of the existing terminal basement walls adjacent to the 301 Mission Property line and the east side of Fremont St. that is not shown on BSE contract drawings or the existing Terminal drawings.

Does this wall continue around the entire perimeter of the Zone 4 basement?

Will this wall be removed by the demo contract prior to BSE NTP #02?

Please provide as-builts of the wall location if is to remain.

SUGGESTION:

ANSWER: **Accept Suggestion:** ☐

Full extent of unforeseen concrete foundation wall not confirmed.

Existing Terminal and Ramps Demolition Project contractor (EBI) has been directed to remove extents of unforeseen foundation wall that are within limits of removal as shown in contract documents to a depth consistent with removal of adjacent structures (pile caps/footings).

Portion of unforeseen concrete foundation wall within Fremont Street to remain in place. Portions of unforeseen concrete foundation wall that are exposed but that are to remain in place are to be documented via as-builts. As-builts will be provided as completed.

Existence of similar walls in Zone 2 and 3 not

Number	Subject	Status	Date Created	Date Required	Date Answered	Cost Impact	Proceed

Does a similar wall exist around the basement walls in Zone 2 and 3?

confirmed. Attached San Francisco-Oakland Bay Bridge, Department of Trinagulation and Surveys, San Francisco Topography Maps dated August 1934 (pages 27-32) are the best available information at this time and have been provided for your information.

T-0021.1 | **BSE - As Built Location of Concrete Foundation Wall Along Fremont St.** | **Closed** | **03/01/2011** | **03/11/2011** | **03/15/2011** | **Potentially** ☐

From: Webcor Construction LP Nhi Tran

To: Turner Construction Compan Daphne Faulkner

Answered By: Turner Construction Comp Jack Adams

Co-Author: Balfour Beatty Infrastructure, Inc. Ural Yal

REQUEST:

Reference RFI #T-0021 (BBI #005) and Drawing Set D

Please provide BBII with as-built locations of the unforeseen concrete foundation wall within Fremont Street which is to remain in place. Please also provide as-built locations for the soldier pile & tie back wall which parallels Fremont Street adjacent to the Buttress. BBII and BECHO want to confirm that there is enough room for their equipment to drill the Buttress Shafts along Fremont Street, and to identify any potential conflicts.

SUGGESTION:

ANSWER: **Accept Suggestion:** ☐

Portion of unforeseen concrete foundation wall within Fremont Street to remain in place as shown on attached. The attached San Francisco-Oakland Bay Bridge, Department of Triangulation and Surveys, San Francisco Topography Maps dated August 1934 are the best available information at this time were provided in RFI T-0021 Rev.0. This is believed to be existing concrete full basement wall extending under the sidewalks remaining from pre Transbay factory/businesses.

As-Built Fremont St. Shoring wall installed by Evans Bros/Malcolm Inc. the soldier pile and tie back wall is also attached. Survey points for the I-Beams was previously transmitted to Webcor-Obayashi Transmittal No. 140-00650.

Webcor/Obayashi Joint Venture

PROJECT MANAGEMENT - REQUEST AND ANSWERS LOG

30100 - Transbay Transit Center Project

Number	Subject	Status	Date Created	Date Required	Date Answered	Cost Impact	Proceed
T-0022	Quality Management System - Org. Chart	Closed	01/28/2011	02/07/2011	02/08/2011	Potentially	☐

From: Webcor Construction LP Joanne Filipas **To:** Turner Construction Compan Daphne Faulkner **Answered By:** Transbay PMPC Jim Coughlin

Co-Author:

REQUEST:

Ref - Attached Org. Chart

Please identify the appropriate personnel associated with the attached org. chart found the in the program Quality Management System.

SUGGESTION:

ANSWER: **Accept Suggestion:** ☐

A revised PMPC organization chart is with TJPA for review. However, I don't understand why this is an RFI. What W/O activity requires this information? The organization chart in the QMS is deliberately generic (titles only) and we have no intention of changing it.

T-0023	Construction Manager Quality Plan	Closed	01/31/2011	02/10/2011	02/07/2011	Potentially	☐

From: Webcor/Obayashi Joint Venture Bob Garcia **To:** Turner Construction Compan Daphne Faulkner **Answered By:** Turner Construction Comp Jack Adams

Co-Author:

REQUEST:

Page 30 Paragraph 8.5.5 of the QMS manual makes reference to "the construction management consultant's quality plan". Please advise when the Construction Managers Quality Plan for the TTC will be issued?

SUGGESTION:

ANSWER: **Accept Suggestion:** ☐

Contractually - the Draft Quality Plan from CMO Construction Manager Oversight is due 2/14/11. Final Quality Plan is due 3/28/11.

T-0024	Re-bracing for Revised SW Corner Alignment	Closed	02/02/2011	02/11/2011	02/11/2011	Potentially	☐

From: Webcor Construction LP Nhi Tran **To:** Turner Construction Compan Daphne Faulkner **Answered By:** Adamson Associates, Inc George Metzger

Co-Author: Balfour Beatty Infrastructure, Inc. Ural Yal

REQUEST:

Reference Sheet GT-1112 and Specification Section 31 55 00

The response to RFI T-0017 showed a revised CDSM wall alignment at the SW corner of zone 1 and the addition of the structural shear walls on wall X1-1. The RFI response implied that BBII's cross-lot bracing needed to be re-designed so there are no conflicts with the concrete columns and shear walls. In order to minimize the cost and impacts as a result of this change, BBII suggests using rakers for the re-bracing in this corner.

The cross lot bracing would be installed as specified for the initial excavation (ref stage 10 on GT-1112) similar to the layout shown on the attached sketch #1.

SUGGESTION:

ANSWER: **Accept Suggestion:** ☐

ARUP Response:

The use of rakers as rebracing is acceptable provided the design criteria specified in the construction

documents is satisfied. This includes, but is not limited to, the bracing stiffness requirements. The

effective stiffness of the rakers will be affected by the stiffness of the permanent train box wall and

mat slab and tiedowns.

The response to this RFI must include input from Thornton Tomasetti regarding the impact on the

Number	Subject	Status	Date Created	Date Required	Date Answered	Cost Impact	Proceed

Then for the re-bracing stage 12 and stage 15 rakers could be used in locations shown in attachment sketch #2.

Would a design based on this concept be acceptable?

If not, BBII is available and willing to brainstorm additional ideas.

permanent structural elements.

As discussed at the Feb 9, 2011 TG03 BSE Subcontractor - Design Team Coordination Meeting, it

may be possible to reduce the requirement for rebracing if the permanent trainbox shear walls can

be built sequentially and their construction coordinated with the removal of struts. Arup suggests a

meeting with Arup, the Contractor, and Thornton Tomasetti as this requires an understanding of the

proposed construction sequence and an evaluation of the permanent structural elements.

Thornton Tomasetti (TT) Response: We have review the response by Arup, and found this is consistent with our prior discussion with Arup. No further comment from TT is needed.

T-0025 **BSE - Request for Recent Groundwater Monitoring Data** **Closed** **02/02/2011** **02/12/2011** **02/11/2011** **Potentially** ☐

From: Webcor Construction LP Nhi Tran **To:** Turner Construction Compan Daphne Faulkner **Answered By:** Adamson Associates, Inc George Metzger

Co-Author: Balfour Beatty Infrastructure, Inc. Ural Yal

REQUEST:

Reference Specification Section 31 55 00 and GDR Table 7-2 (attached)

The Project GDR table 7-2 shows the last GW level reading in Feb of 2010. Can BBII receive a copy of any readings taken within the last year?

SUGGESTION:

ANSWER: **Accept Suggestion:** ☐

See attached T0025-SK01 for groundwater readings.

T-0026 **301 Mission Wall - Sample chip of paint color for exposed concrete** **Closed** **02/07/2011** **02/17/2011** **02/10/2011** **Potentially** ☐

From: Webcor Construction LP David Hungerford **To:** Turner Construction Compan Kevin Chiu **Answered By:** URS Corporation David Fyfe

Co-Author:

Number	Subject	Status	Date Created	Date Required	Date Answered	Cost Impact	Proceed

REQUEST:

Reference: A-5000 note 6

Note 6 on sheet A-5000 states, "Color of paint for exposed concrete to match sample chip provided by TJPA representative". Please provide color sample chip per this note.

SUGGESTION:

ANSWER: **Accept Suggestion:** ☐

Omit note 6 on sheet A-5000. Color of paint for exposed concrete wall shall match color of paint provided on existing exposed planter boxes.

T-0027 | **301 Mission Screen Wall - Dowels for Screen Wall** | **Closed** | **02/08/2011** | **02/18/2011** | **02/18/2011** | **Potentially** ☐

From: Webcor Construction LP David Hungerford **To:** Turner Construction Compan Kevin Chiu **Answered By:** URS Corporation David Fyfe

Co-Author:

REQUEST:

Reference: Attached pictures

Upon laying out the dowel embedment locations for the new concrete wall, the locations are very close to the edge of the existing manholes and vault lids. Transworld is concerned that the location of the doweling is too close to these existing items and does not believe it to be the intent. Please see attached pictures showing the areas of concern. Please respond ASAP with direction on where to place the dowels, as Transworld has no slack in the schedule to accomodate any stoppage of work.

SUGGESTION:

ANSWER: **Accept Suggestion:** ☐

The final condition for the dowels drilled into the 301 Mission existing basement perimeter wall is shown on attached sketch. Dowels shall be drilled 6 inches from exterior face of existing basement perimeter wall. Verify location of existing basement perimeter wall prior to drilling. These dowels remain within 1 inch of centerline of the new concrete wall.

See attached RFI coordination sketch.

T-0027.1 | **301 Mission Screen Wall - Dowels for Concrete Wall: Layout Acceptance** | **Closed** | **03/29/2011** | **04/08/2011** | **04/05/2011** | **Potentially** ☐

From: Webcor Construction LP David Hungerford **To:** Turner Construction Compan Daphne Faulkner **Answered By:** URS Corporation David Fyfe

Co-Author:

REQUEST:

Reference: RFI T-0027

Please confirm that per site walk on 03/22/11 with Danny Lo and Erik Liu of Transworld, David Hungerford with Webcor-Obayashi, and David Fyfe and Christine Baudier of URS, that the layout of the core holes for the #8 dowels in the concrete wall are acceptable.

RFI T-0027 included a response sketch directing dowels to be in line and set 6" from the south face of the existing

SUGGESTION:

ANSWER: **Accept Suggestion:** ☐

It was verified in the field that #8 dowels were drilled approximately 6" from the exterior face of the existing vault wall and that #8 dowels will have a minimum 2" concrete cover.

The layout of the #8 dowels is acceptable.

Number	Subject	Status	Date Created	Date Required	Date Answered	Cost Impact	Proceed

wall below. Due to the existing condition of the wall below, which was poured aginst a shoring wall and therefore not exactly straight, the dowels are laid out to be in line with each other and therefore vary in dimension measured off of the south face of the existing basement wall below. Please confirm, as it is understood, that the existing layout is acceptable. Dowels are being set in epoxy today, so an immediate response is requested.

T-0028 **BSE - Bracing Stiffness Calculation Confirmation** **Closed** **02/08/2011** **02/18/2011** **02/09/2011** **Potentially** ☐

From: Webcor Construction LP Nhi Tran **To:** Turner Construction Compan Daphne Faulkner **Answered By:** Arup Kevin Clinch

Co-Author: Balfour Beatty Infrastructure, Inc. Ural Yal

REQUEST:

Reference Specification Section 31 55 00 and attached sample calculations

The response to pre-bid RFI #TG0300-058 provided an equation for calculating the stiffness of the bracing system. Attached is BBII's designer's sample "template" calculation for stiffness for the proposed waler and strut bracing system.

BBII requests a confirmation that the designer's interpretation and use of the provided stiffness calculation is correct, prior to progressing further submittal calculations and procuring steel bracing members.

Additionally, BBII requests an expedited response to this RFI.

SUGGESTION:

ANSWER: **Accept Suggestion:** ☐

The methodology shown in these calculations for determining the internal bracing system stiffness is consistent with that shown in response to pre-bid RFI #TG0300-058.

Complete details of the internal bracing system were not included in the RFI. It is therefore not possible to conclude that all elements affecting the stiffness of the internal bracing system have been considered and included in the analysis.

These calculations have not been reviewed for conformance with other design criteria. A more complete review will be undertaken when the calculations are issued as a submittal.

T-0029 **301 Mission Screen Wall - Sub Surface Structure Conflict with New Wall Location** **Closed** **02/09/2011** **02/19/2011** **02/18/2011** **Potentially** ☐

From: Webcor Construction LP David Hungerford **To:** Turner Construction Compan Kevin Chiu **Answered By:** URS Corporation David Fyfe

Co-Author:

REQUEST:

Reference: Photograph attachments 1-8

In laying out the location of the new concrete wall,

SUGGESTION:

ANSWER: **Accept Suggestion:** ☐

To accommodate unforeseen location of existing structures, new concrete wall to be shifted south so that the south face of new concrete wall is flush with

Number	Subject	Status	Date Created	Date Required	Date Answered	Cost Impact	Proceed

Transworld has determined that the new concrete wall will extend over existing sub-surface structures, which is not per the contract documents. Please reference attached photos.

First, there are two manhole covers that are incorporated in concrete rings. These rings conflict with the location of the new wall and are included in photographed attachments. Due to the size of these concrete rings, a portion of the ring will be buried by the new wall. Second, the steel frame of the existing electrical vault doors is of similar condition as the manhole covers; this condition can also be seen in the photographed attachments.

Please confirm that Transworld is to proceed with the plan location of the new concrete wall which will cover and bury a portin of these existing sub-surface structures.

the exterior face of the existing 301 Mission street basement perimeter wall.

Interfering regions of existing sub-surface structures (manhole rings and vault sides) at the base of new concrete wall shall be incorporated into new concrete wall. All surfaces of interfering concrete regions to be incorporated into new concrete wall shall be prepared as bonded construction joints. Verify functioning of manhole and vault lids/openings are not obstructed by new concrete.

Contractor to provide chalk line at updated south and north faces of new concrete wall for verification of updated location in field by TJPA representative prior to construction of new concrete wall.

See attached RFI coordination sketch.

Webcor/Obayashi Joint Venture

PROJECT MANAGEMENT - REQUEST AND ANSWERS LOG

30100 - Transbay Transit Center Project

Number	Subject	Status	Date Created	Date Required	Date Answered	Cost Impact	Proceed
T-0030	301 Mission Screen Wall - Detail required for concrete sleeve installation	Closed	02/09/2011	02/19/2011	02/18/2011	Potentially	☐

From: Webcor Construction LP David Hungerford **To:** Turner Construction Compan Kevin Chiu **Answered By:** URS Corporation David Fyfe

Co-Author:

REQUEST:

Reference: Attached 1/C-5001 and photo

The existing condition of the manhole covers are not consistent with the contract documents. Detail 1/C - 5001 indicates that the existing manhole sits above an existing concrete slab, to which is to be drilled into with 1 inch embedment. However, please refer to the attached photograph in attachment 1 which shows the manhole cover is actually a part of a subsurface concrete ring assembly, and wrapped with waterproofing. Please provide a new detail and instructions for the installation of the required concrete sleeve and a detail for penetrating the existing waterproofing.

SUGGESTION:

ANSWER: **Accept Suggestion:** ☐

Per contract documents;

Remove manhole lid;

Retain existing concrete and steel collar/frame;

Dowel into existing concrete collar/frame (1" max) with #3 hoops @ 10" O.C.;

Prepare existing concrete surfaces to be incorporated into new sleeve as bonded construction joints;

Cast in place 6" thick concrete sleeve directly over manhole (concrete and steel collar/frame);

Provide Kadee SS 1/8" circular grate satin finish.

T-0030.1	301 Mission Screen Wall - Concrete sleeve installation	Closed	02/24/2011	03/06/2011	03/03/2011	Potentially	☐

From: Webcor Construction LP David Hungerford **To:** Turner Construction Compan Daphne Faulkner **Answered By:** URS Corporation David Fyfe

Co-Author:

REQUEST:

Reference: RFI T-0030

The final measurement from the edge of the steel collar/frame at the existing manholes to the face of new wall is (+/-) 4-3/4", this dimension less form material (+/-) 3/4" to 1", results in the new cast in place concrete sleeve to be 4" thick at the point closest to the wall . Response to RFI T-0030 notes that the sleeve is to be 6" thick. Please clarify if the 4" thickness is acceptable.

SUGGESTION:

ANSWER: **Accept Suggestion:** ☐

4" minimum thickness acceptable only where new CIP concrete sleeve is in conflict with new interim screen wall. Remaining portions of new CIP concrete sleeve not in conflict with new interim screen wall shall be 6" thick per contract documents.

Contractor shall provide 3/8" expansion joint material between face of new interim screen wall and outside face of new CIP concrete sleeve.

See attached coordination sketch.

T-0031	301 Mission Screen Wall - In-ground lighting	Closed	02/09/2011	02/19/2011	02/21/2011	Potentially	☐

From: Webcor Construction LP David Hungerford **To:** Turner Construction Compan Kevin Chiu **Answered By:** URS Corporation David Fyfe

Co-Author:

Number	Subject	Status	Date Created	Date Required	Date Answered	Cost Impact	Proceed

REQUEST:

Reference: Note 10 on C-2000

The new in-ground lighting as anticipated in plans and note 10 on page C - 2000 must be substituted because the contract design cannot be accommodated in the new construction. The contract design requires:
1) that the new lighting match the existing with the same model and size.
The issue here is that the existing light fixtures are larger than can be accommodated within the thickness of the new construction.

2) that the existing electrical lines servicing the existing lights be disconnected so that it is reconnected to the new lights.
The issue here is that the electrical lines for the existing light fixtures are embedded in the concrete curb that is to be removed. Upon removal of the existing concrete curb, there will be no existing electrical lines to reconnect for the new lighting power.

Please provide a new detail and instructions for the in-ground lighting.

SUGGESTION:

ANSWER: **Accept Suggestion:** ☐

Additional information is required to understand/interpret existing conditions and facilitate a response to this RFI.

Please provide all available information on existing conditions that pertain to this RFI, including but not limited to the following;

1. type, model, size and manufacturer of existing light fixtures;
2. type and size of existing electrical conduit/conductor;
3. sketch illustrating alignment of existing electrical conduit/conductor, including junction boxes, termination points and power source; and,
4. sketch illustrating thickness of existing/new construction where new lights are to be set/placed.

T-0031.1 **301 Mission Wall - In-ground lighting** **Closed** **03/31/2011** **04/10/2011** **04/06/2011** **Potentially** ☐

From: Webcor Construction LP David Hungerford **To:** Turner Construction Compan Daphne Faulkner **Answered By:** URS Corporation David Fyfe

Co-Author:

REQUEST:

Reference: Attached photos and sketch

Response to RFI T-0031 requested additional information.

1. See the attached pictures for the information known about the lights that were removed.
2. The existing conduit is 3/4"
3. Attached is a sketch and a photo showing the approximate location of the existing conduit.

There is one existing conduit on the south side of the wall protruding from the soil coming from the basement wall. The electrical conduit is approximately 6 feet east from the

SUGGESTION:

ANSWER: **Accept Suggestion:** ☐

We note that the Contractor has installed new electrical conduit and outlet boxes within the new concrete wall.

To document the as-built conditions of all work and to verify conformance with all applicable codes and standards, Contractor shall submit drawing(s) illustrating full routing of all conduit(s), including alignment, conduit material type, couplings/fittings, outlet boxes, etc. Drawings shall detail the connection between existing electrical line and new electrical line and connection between new electrical line and new lights/fixtures.

Number	Subject	Status	Date Created	Date Required	Date Answered	Cost Impact	Proceed

western transformer vault vent opening. Attached you can see the pictures of this conduit that is currently sticking out below the scaffolding planking.

4. Please advise the location and mounting details for the new lights.

Drawings shall be sufficiently detailed to document all electrical work is in conformance with all applicable codes and standards, and shall be sufficient for permitting and/or inspection of electrical work.

All conduit and/or boxes shall be set so as to provide minimum 1¿ clear from all rebar, anchor bolts or other embedded structural steel items. Outlet boxes located in new concrete wall shall be fully coordinated for direct connection with the new light(s)/fixture(s).

It is our understanding that the existing 301 Mission driveway/roadway section (approximately 3¿ paver over 1¿ sand bed over 4¿ to 8¿ concrete topping slab) does not allow use of new lights/fixtures matching original lights/fixtures. It is recommended use of the Ligman Paragon square 186mm (50338-N-35) light/fixture, or approved equal, in lieu of the original light/fixture (Hydrel M9410). The new Ligman Paragon square light fixture (or equivalent fixture) shall be placed adjacent to new concrete wall and shall be mounted exposed above ground (not in ground) with the base of new light fixture located aligned to top of paver(s). See attached coordination sketch.

Please confirm the use of Ligman Paragon square 186mm (50338-N-35) light(s)/fixture(s) can be fully coordinated with all work.

See attached product data for Ligman Paragon square 186mm (50338-N-35) light/fixture.

In addition, in response to item 2 of RFI No.T-0031, Contractor please coordinate with 301 Mission Building management to ensure that the new light shall be connected correctly to the existing power supply.

T-0031.2	**301 Mission Wall - Light Fixtures**	**Closed**	**06/29/2011**	**07/09/2011**	**07/13/2011**	**Potentially**	☐

From: Webcor Construction LP David Hungerford **To:** Turner Construction Compan Daphne Faulkner **Answered By:** URS Corporation David Fyfe

Number	Subject	Status	Date Created	Date Required	Date Answered	Cost Impact	Proceed

Co-Author:

REQUEST:

Reference: Attached light specs

Per field conversations with 301 Mission staff, the light fixture proposed in response to RFI T-0031.1 is not acceptable. Webcor-Obayashi has coordinated with 301 Mission management personnel and the lighting attachment to this RFI has been requested by 301 Mission. Confirm that the attached light specs are to be installed at the stucco slot locations.

SUGGESTION:

ANSWER: **Accept Suggestion:** ☐

URS provided four lighting options to Webcor-Obayashi on April 22, 2011 to coordinate with 301 Mission management personnel. It is noted that the lighting attachment to this RFI (Allscape BL-81) is similar to one of the four lighting options provided by URS (Allscape BL-80).

The Allscape BL-80 model (with 39 watt/240 volt, metal halide lamp and prismatic tempered glass lens) was selected by URS because it provides photometric qualities and operating electrical amperage comparable to the original lighting fixture (Hydrel M9410, 35 watts/277 volt, metal halide lamp).

It is noted that the lighting attachment to this RFI, Allscape BL-81 model (with 150 watt/277 volt, metal halide lamp and prismatic tempered glass lens) may provide photometric qualities and operating electrical amperage not similar to the original lighting fixture. It is also noted that the Allscape BL-81 model luminaire is 14.5" wide, which is greater than the 14" width stucco slot(s) specified in the contract documents.

Prior to order and/or installation of the lighting attachment to this RFI (Allscape BL-81, 150 watt/277 volt metal halide lamp) Contractor to confirm the following;

301 Mission building existing electrical circuit/feed that is to be used is sufficient to handle electrical load required by the Allscape BL-81, 150 watt/277 volt metal halide lamp(s);
14.5" width of the BL-81 luminaire(s) can fit within the stucco slot(s) constructed, note contract documents specify 14" wide stucco slot(s); and
photometric qualities of 150 watt lamp (e.g. lighting intensity/brightness) is acceptable to/preferred by 301 Mission management personnel.

T-0032	**301 Mission Screen Wall - Tie Beam Below Grade Conection to Screen Wall**	**Closed**	**02/09/2011**	**02/19/2011**	**02/23/2011**	**Potentially**	☐

From: Webcor Construction LP David Hungerford **To:** Turner Construction Compan Kevin Chiu **Answered By:** URS Corporation David Fyfe

Number	Subject	Status	Date Created	Date Required	Date Answered	Cost Impact	Proceed

Co-Author:

REQUEST:

Reference: Attached photo

See attached picture of 301 Mission Screen Wall construction in progress. This picture was taken Nov of 2008, and shows a lateral support tie beam below grade connected to each vertical steel member of the screen wall. These tie beams are not shown on the plans and need to be cut so that the existing wall can be removed by others, as this scope is below and out of Transworld's contract. Please provide details for this condition.

SUGGESTION:

ANSWER: **Accept Suggestion:** ☐

RESPONSE 02/16/2011 per David Fyfe

Tie beams shall be saw cut cleanly at exterior face of existing 301 Mission street basement perimeter wall.

Restoration of waterproofing is required.

Detail 1 on attached 301 Mission Street drawing S3-3.13 (rev 6, 04/04/2008) is the best available information at this time and has been provided for your information.

RESPONSE 02/23/2011 per Kevin Chiu

Pending approval by the TJPA, a CR will be issued.

T-0033	301 Mission Screen Wall - Concrete Demo Scope of Work Clarification	Closed	02/14/2011	02/24/2011	02/25/2011	Potentially ☐

From: Webcor Construction LP David Hungerford **To:** Turner Construction Compan Daphne Faulkner **Answered By:** Turner Construction Comp Jack Adams

Co-Author:

REQUEST:

Reference: attached text document

Please see attached text document explaining Transworld's request.

Transworld Construction requests that TJPA, Turner Construction, and Webcor-Obayashi make a final determination as to work scope based on the documents and discussions provided herein. It is Transworld's contention and belief that the 301 Mission wall relocation work scope does not require Transworld to remove the (e) concrete structure below the dark gray colored curb. For clarity see Exhibit D, page 1 and page 2.

Attached please see text explanation and Exhibits A, B, C, and D.

SUGGESTION:

ANSWER: **Accept Suggestion:** ☐

Response from David Fyfe on 2/23/11:
Removal of element is in scope per contract documents, see detail B on sheet C-5000.

Response from John Adams on 2/24/11:
1. Demolition scope Utility Vault "foundation" to be demolished by Evans Bros see attached sketch C-5000 Detail A.
2. Existing "Concrete Slab" in accord with attached sketch C-5000 Detail B - this element is in scope and is to be removed by Transworld per C-5000 Detail B including concrete as shown.
3. Demolition scope "unforeseen grade beam" to be severed by Evans Bros see attached sketch C-5000

Number	Subject	Status	Date Created	Date Required	Date Answered	Cost Impact	Proceed

Detail B.

T-0034 **301 Mission Screen Wall - Change of walkway from original logistics** **Closed** **02/14/2011** **02/24/2011** **02/22/2011** **Potentially** ☐

From: Webcor Construction LP David Hungerford **To:** Turner Construction Compan Daphne Faulkner **Answered By:** URS Corporation David Fyfe

Co-Author:

REQUEST:

The conditions of the worksite have changed significantly from what Transworld originally bid and have changed the entire logistical plan for the execution of this contract work. The original logistics plan, as well as the contract documents, show a walkway along the South side of the original existing screen wall. Now, the entire walkway has been removed and nothing exists except an open pit. Please see all four pages of Exhibit A that is attached to this RFI. This change of condition affects Transworld's ability to execute the contract work. There is no longer available workspace to erect the structural steel and the South side finishes. This condition now requires a modification to our contract such that Transworld may use the parking/driveway on the North side of current barricaded area. The exact impact is not yet fully developed because there are ongoing discussions related to further demolition and removal of concrete structures that currently exist for our construction work. If the current and remaining working areas are further deteriorated by additional demolition, even greater challenges will arise. Transworld Construction requests reasonable accommodations for access to the worksite from the parking/driveway that is North of the currently erected temporary barricade wall.

SUGGESTION:

ANSWER: **Accept Suggestion:** ☐

301 Mission Street driveway shall remain open to building tenants/occupants for through traffic at all times.

Per 2/17/11 field meeting, if coordinated with and approved by 301 Mission Street property owner in advance, one lane of driveway may be temporarily used short term by contractor for deliveries.

Contractor shall prepare and submit a Logistics Plan to the TJPA Representative and 301 Mission Street property owner for review and approval prior to use of driveway. At a minimum Logistics plan shall include the following;

- scheduled dates and duration of driveway use;
- traffic control plan/sketch (including extent of driveway to be used, proposed/required signs, barricades, flagmen, etc.); and,
- extent of temporary barricade wall dismantling and restoration.

Contractor shall provide all necessary traffic control measures (signs, barricades, fencing, flagmen, etc.) during use of driveway as directed by the TJPA Representative and/or 301 Mission Street property owner.

Contractor shall restore temporary barricade wall at end of each day if dismantled.

T-0035 **BSE - Additional Trainbox Drawings** **Closed** **02/16/2011** **02/26/2011** **02/22/2011** **Potentially** ☐

From: Webcor Construction LP Nhi Tran **To:** Turner Construction Compan Daphne Faulkner **Answered By:** Adamson Associates, Inc George Metzger

Number	Subject	Status	Date Created	Date Required	Date Answered	Cost Impact	Proceed

Co-Author: Balfour Beatty Infrastructure, Inc. Ural Yal

REQUEST:

Reference Sheet S-3201 and Specification Section 31 55 00

BBII believes that they do not have enough detailed drawings of the Train Box to properly design a conflict-free bracing system. BBII states that the architectural sections A1-6000 through A1-6231 lack detail regarding dimensions of structural components (i.e. beams, walls, ramps and etc.). The only structural section BBII currently has is on S-3201 and there appears to be a beam running along C line, however that beam is not identified in the table.

BBII is requesting additional structural section and elevation drawings, specifically:
- A dimensioned longitudinal elevation of the entire trainbox, showing the most current location and depths of beams.
- Full cross section of typical trainbox as well as any other non typical section. Shown any cross slopes, high and low points of concrete.
- Detailed sections of the SW corner showing dimensions and elevations of any ramps or locations where there are on ground floor slabs.

BBII would prefer CAD files if possible, however hardcopies will work.

SUGGESTION:

ANSWER: **Accept Suggestion:** ☐

The design of the permanent structure inside the shoring wall is in progress and subject to change. At 50% Construction Documents on December 20, 2010 an in-progress 3D REVIT Program Computer Model was issued to TJPA and TJPA shared this model with W/O for informational purposes on the progress of the permanent structure design. We suggest that for reference only, W/O review the possible locations for shoring struts with the in-progress 3D REVIT Program Computer Model. This 3D REVIT Program Computer Model provides more information than you would receive in the limited number of sections requested above.

T-0035.1	BSE - Request Structure Section Drawings	Closed	03/15/2011	03/25/2011	03/23/2011	Potentially ☐

From: Webcor Construction LP Nhi Tran **To:** Turner Construction Compan Daphne Faulkner **Answered By:** Adamson Associates, Inc George Metzger

Co-Author: Balfour Beatty Infrastructure, Inc. Ural Yal

REQUEST:

Reference attached sheet

As discussed in 03/09/11 TG03 Design Team meeting, AAI said they would provide sections of the trainbox structure if BBII indentified where to take the cuts. Below is a list and the attached shows where BBII would like these taken

CUT # - DESCRIPTION

SUGGESTION:

ANSWER: **Accept Suggestion:** ☐

See the attached in-progress design documents at the requested locations. This information is being provided as reference information for use in determining possible locations for the shoring struts and is not issued as a construction document.

Number	Subject	Status	Date Created	Date Required	Date Answered	Cost Impact	Proceed

1.A - Full length section along Grid A
1.E - Full length section along Grid E
1.J - Full length section along Grid J unfolded along wall alignment
2 - Full width section at Column Line 3
3 - Full width section at Column Line 7
4 - Full width section at Column Line 10.5
5 - Full width section at Column Line 18 (CL First St)
6 - Full width section at Column Line 23
7 - Full width section at Column Line 26 (CL Freemont St)
8 - Full width section at Column Line 30
9 - Full width section at Column Line 34.5 (Beale St.)
10 - Section at "flare?"
11 - Section at "flare?"

Please provide either electronic 2D CAD files at for each section where BBII can dimension, or hardcopy drawings that are fully dimensioned.

T-0036 **BSE - Bracing Load Discrepancy** **Closed** **02/16/2011** **02/26/2011** **02/18/2011** **Potentially** ☐

From: Webcor Construction LP Nhi Tran
Co-Author: Balfour Beatty Infrastructure, Inc. Ural Yal

To: Turner Construction Compan Daphne Faulkner
Answered By: Adamson Associates, Inc George Metzger

REQUEST:

Reference Sheet GT-1110, Specification Section 31 55 00, and attached memo

Please see the attached memo from BBII's bracing design engineer, PB&A.

PB&A are finding more than a slight discrepancy between the bracing loads given in the tables of GT-1110 when compared to loads they calculated using the "design profile" earth pressured diagram as shown on the same sheet.

As required by note 6 on GT-1110, BBII is continuing their design with the forces given in the tables, however BBII feels it is prudent to note the variances.

SUGGESTION:

ANSWER: **Accept Suggestion:** ☐

See the attached reply.

Attached Response from ARUP - 02/18/2011 Kevin Clinch

The internal bracing system shall be designed to satisfy the criteria specified in the contract documents including the strut loads given in the tables on GT-1110.

Our review of the calculations included with the RFI was limited to that necessary to understand the Contractor¿s questions. The calculations have not been reviewed for conformance with the contract documents. A more complete review will be undertaken when the calculations are issued as a

Number	Subject	Status	Date Created	Date Required	Date Answered	Cost Impact	Proceed

BBII requests confirmation that the forces given in the tables of GT-1110 are correct.

submittal. Additional calculation documentation and / or a meeting with the Contractor¿s engineer will be required for us to interpret the software output and to facilitate our review.

T-0037 **BSE - Request for Utility As-Builts** **Closed** **02/17/2011** **02/28/2011** **03/01/2011** **Potentially** ☐

From: Webcor Construction LP Nhi Tran **To:** Turner Construction Compan Daphne Faulkner **Answered By:** AECOM Technical Servic Eric Zagol

Co-Author: Balfour Beatty Infrastructure, Inc. Ural Yal

REQUEST:

Reference Sheets U-2021 to U-2023, U-4005

BBII is requesting as-built data for the phase 1 electrical ductbanks at First St. and Fremont St. BBII is particularly interested in receiving the coordinates, elevations, width and depths of the ductbank where they intersect the CDSM wall as shown on utility drawings U-2021 through U-2023

Additionally, BBII would like to receive more info on the phase 2 utilities shown in section X&Y on U-4005:
- What material are these ducts and are they encased?
- Can the spacing shown on U-4005 be shifted to accommodate bridge girder spacing?

SUGGESTION:

ANSWER: **Accept Suggestion:** ☐

Phase I electrical ducts as shown on the AECOM Relocation of Utilities Project (RUP) Plans sheets U-2020, U-2021, U-2022 and U-2023 on First and Fremont streets have been constructed or will be constructed by PG&E. AECOM has requested as-built information from PG&E on what has been constructed to date and will provide upon receipt.

Sections X and Y on RUP sheet U-4005 shows utilities in the proposed final locations following construction of the Transit Center substructure and permanent utility corridors on First and Fremont streets. Not all utilities shown need to be incorporated and supported by the interim bridge structures on First and Fremont streets.

Only PG&E and Verizon Phase II utilities need to be incorporated and supported from the interim bridge structure. The remaining utilities i.e. AT&T, TCG and PG&E "NIP" (PG&E New Bushiness) indicated in section, will be constructed following construction of the Transit Center substructure and permanent utility corridors.

PG&E has proposed steel conduit for the ducts to be supported by the interim bridge structures. Verizon has proposed PVC conduits.

Proposed modifications to utility alignments (horizontal and vertical) and conduit configuration may be acceptable upon review and acceptance by AECOM and the private utility. AECOM suggests a coordination meeting between BBII, AECOM and the

Number	Subject	Status	Date Created	Date Required	Date Answered	Cost Impact	Proceed

private utilities to help facilitate the interim bridge and utilities support design.

T-0037.1 **BSE - Request for Utility As-Builts** **Closed** **03/24/2011** **04/04/2011** **04/13/2011** **Potentially** ☐

From: Webcor Construction LP Nhi Tran **To:** Turner Construction Compan Daphne Faulkner **Answered By:** AECOM Technical Servic Eric Zagol

Co-Author: Balfour Beatty Infrastructure, Inc. Ural Yal

REQUEST:

Reference RFI #T-0037 and Sheets U-2020, U-2021, U-2022 and U-2023

Please provide BBI with as-built information from PG&E on what has been constructed to date, as mentioned in the response to RFI #T-0037

SUGGESTION:

ANSWER: **Accept Suggestion:** ☐

PG&E's substructure work on First and Fremont Streets is scheduled to be complete by April 28, 2011. PG&E will provide as-built drawings following completion of their work.

T-0037.2 **BSE - Request for Utility As-Builts** **Closed** **03/24/2011** **04/28/2011** **04/25/2011** **Potentially** ☐

From: Webcor Construction LP Nhi Tran **To:** Turner Construction Compan Daphne Faulkner **Answered By:** Turner Construction Comp Daphne Faulkner

Co-Author: Balfour Beatty Infrastructure, Inc. Ural Yal

REQUEST:

Reference RFI #T-0037.1

Please provide BBI with as-built information from PG&E on what has been constructed to date, as mentioned in the response to RFI #T-0037 and RFI#T-0037.1

SUGGESTION:

ANSWER: **Accept Suggestion:** ☐

Please see response to RFI #T0037.1. Asbuilts will be available once received from PGE. This issue has being denoted in the open issues log and does not require an open RFI to track the issuance of the asbuilts.

T-0038 **BSE - Shear Walls for Rebracing** **Closed** **02/17/2011** **02/27/2011** **02/22/2011** **Potentially** ☐

From: Webcor Construction LP Nhi Tran **To:** Turner Construction Compan Daphne Faulkner **Answered By:** Adamson Associates, Inc George Metzger

Co-Author: Balfour Beatty Infrastructure, Inc. Ural Yal

REQUEST:

Reference response to RFI #T-0024, Sheet GT-1112, and attached drawing

SUGGESTION:

ANSWER: **Accept Suggestion:** ☐

Thornton Tomasetti Response:

Number	Subject	Status	Date Created	Date Required	Date Answered	Cost Impact	Proceed

The response to RFI #T-0024 noted discussions that took place during the TG03 BSE Trade Subcontractor - Design Team Coordination Meeting, about utilizing the permanent shear wall as re-bracing during the train box build out.

Attached is a sketch showing a staged wall construction and strut removal sequence that BBII believes would eliminate the need for re-bracing along the SW Wall.

Is this sequence acceptable?

The conditions depicted in Stage 12 & 13 of sketch GT-1112 for shearwalls to be used as re-brace elements will cause overstressing of the mat slab and excessive movement of the Trainbox wall, and therefore, is not acceptable. Note however, that once the Lower Concourse slab is constructed and develops the design strength, the upper portion of the shearwall above the Lower Concourse slab can be used as re-braces. See attached SKS-0101 that illustrates the load path of the shearwall.

ARUP Response:

The use of the permanent concrete shearwalls as bracing is acceptable provided the design criteria specified in the construction documents is satisfied. This includes, but is not limited to, the bracing stiffness requirements. The effective stiffness of the shear walls will be affected by the stiffness of the permanent train box wall and mat slab and tiedowns.

The response to this RFI must include input from Thornton Tomasetti regarding the impact on the permanent structural elements.

T-0039 **301 Mission Screen Wall - Base Plate Dimensions** **Closed** **02/17/2011** **02/27/2011** **02/23/2011** **Potentially** ☐

From: Webcor Construction LP David Hungerford **To:** Turner Construction Compan Daphne Faulkner **Answered By:** URS Corporation David Fyfe

Co-Author:

REQUEST:

Reference: 2/S-5000, D/S-5000, attached sketches

See the 301 Mission Screen Wall drawings, specifically details 2 and D/S-5000. Is it acceptable to use a base plate with dimensions 14" x 14", in lieu of the 14" x 18" per plan below the HSS 10" x 10"? See attached sketches of proposed anchor bolt mounting options A and B. If acceptable, please choose the detail you prefer.

SUGGESTION:

ANSWER: **Accept Suggestion:** ☐

Neither options A nor B are acceptable for the anchor bolt mounting system. Provide a base plate as detailed on S-5000 that has the dimensions of 14" by 18".

Webcor/Obayashi Joint Venture

PROJECT MANAGEMENT - REQUEST AND ANSWERS LOG

30100 - Transbay Transit Center Project

Number	Subject	Status	Date Created	Date Required	Date Answered	Cost Impact	Proceed
T-0040	**BSE - Proposed Bracing Removal Sequence**	**Closed**	**02/22/2011**	**03/04/2011**	**02/23/2011**	**Potentially**	☐

From: Webcor Construction LP Nhi Tran
To: Turner Construction Compan Daphne Faulkner
Answered By: Adamson Associates, Inc George Metzger
Co-Author: Balfour Beatty Infrastructure, Inc. Ural Yal

REQUEST:

Reference Sheet GT-1112 and attached proposal

Attached is a proposed sequence for bracing removal that involves removing the two lower layers of bracing after the structural slab and fillets are poured. BBII's shoring designer has done analysis at each stage of construction (see attached). The results show that removal of the two lower levels after the slab has been poured produces less deflection than the fully excavated condition. The results are summarized for case west and case east on page 18 and 36 respectively.

BBII believes this proposed sequence provides a tremendous value to the overall project by:
- Eliminating the coordination between the bracing and concrete trade subcontractors during the construction of the lower walls and concourse slab
- Eliminates a horizontal construction joint in the lower wall which significantly reduces construction cost and duration.
- Allows for better waterproofing product, by eliminating a construction joint and reduces patching of the membrane around shoring elements
- Allows for unobstructed construction of the lower walls and soffit shoring of the concourse level slab, which also reduces construction cost and duration

BBII is requesting evaluation by TJPA's design team to determine if this sequence is acceptable.

SUGGESTION:

ANSWER: **Accept Suggestion:** ☐

ARUP Response:

The question in this RFI is a substitution request and should be submitted following the appropriate procedures outlined in the specifications.

Considerable time and coordination between the design team members is required to properly evaluate the suggestion. Arup will continue to study the issue. We understand it will be a topic of discussion at the March 1 TG03 BSE Subcontractor - Design Team Coordination Meeting.

T-0041	**BSE - COR and PCO Forms**	**Closed**	**02/23/2011**	**03/05/2011**	**03/16/2011**	**Potentially**	☐

From: Webcor Construction LP Nhi Tran
To: Turner Construction Compan Daphne Faulkner
Answered By: Turner Construction Comp Daphne Faulkner
Co-Author: Balfour Beatty Infrastructure, Inc. Ural Yal

REQUEST:

Reference Spec. Section 00 07 00, 6.03E,

Per section 00 07 00, 6.03E, BBII requests for the form as mentioned to be supplied by TJPA, preferably in editable electronic format.

SUGGESTION:

ANSWER: **Accept Suggestion:** ☐

There are no forms provided by TJPA. Webcor/Obayashi has established an acceptable summary cover sheet for change proposals.

Number	Subject	Status	Date Created	Date Required	Date Answered	Cost Impact	Proceed
T-0042	301 Mission Screen Wall - Elevation of concrete wall	Closed	02/24/2011	03/06/2011	03/10/2011	Potentially	☐

From: Webcor Construction LP David Hungerford **To:** Turner Construction Compan Daphne Faulkner **Answered By:** URS Corporation David Fyfe

Co-Author:

REQUEST:

Please clarify the following information regarding the field elevation of the new concrete wall. Detail A/S-4000 indicates that the concrete foundation wall height shall be +/- 2'- 2" to 2'- 8". Based on this reference the tallest part of the concrete wall will be the East point of the wall. The height of the wall will then decrease as the wall moves west towards Fremont St. (the west side). If we use a wall height of 2'- 8" at its tallest point (the east side), that would result in a wall height of 20.5 inches at Fremont Street (the west end). This is less than 2'-2" as indicated in the contract drawings; therefore please confirm that Transworld will be building a concrete wall height between 20.5 inches to 2'- 8". As a point of comparison, the original existing screen wall had this exact same dimension of 20.5 inches at the low and 2'- 8" at the high.

SUGGESTION:

ANSWER: **Accept Suggestion:** ☐

New concrete wall height of 20.5" above the existing embed plate on west end is not acceptable.

Contract documents show the new concrete wall height varies from 2'-2" +/- to 2'-8" +/-. This is based on the driveway elevations shown on the existing plans provided by Millennium Partners, developer for 301 Mission Street, and allowing for a code required minimum 18" high concrete wall from top of paver/driving surface for vehicle safety. As noted on A/S-4000, "Top of (E) Vault Wall Elevation may Vary, Contractor to VIF, Adjust Concrete Wall Accordingly", please adjust top of concrete wall to be minimum 18" above top of paver/driving surface (approximately 2'-4" +/- to 3'-4" +/- in wall height).

See attached coordination sketch.

T-0043	301 Mission Screen Wall - Temporary Vault Plug at Utility Vault Opening	Closed	02/25/2011	03/07/2011	03/23/2011	Potentially	☐

From: Webcor Construction LP David Hungerford **To:** Turner Construction Compan Daphne Faulkner **Answered By:** URS Corporation David Fyfe

Co-Author:

REQUEST:

Regarding the transformer vault plug as shown on page C-5000; Transworld has been asked to submit some proposals as to how a plug should be installed. The original existing ventilation for the vault was open to the air at the original planters. This original ventilation was completely open and secured only by a metal grate to prevent access, but not water or air. As located on page C-5000, Transworld construction proposes to install 2 x 4 backing studs attached to the left and right vertical walls of the existing opening. These 2 x 4 backing studs will be adhered with powder actuated nails. Spanning across the backing studs Transworld construction proposes to install two 2 x 4 crossmembers which will be nailed to the 2 x 4 backing studs. This assembly can be seen in the attached pictures pages 1 and 2.

The assemblly noted above is option 1.

SUGGESTION:

ANSWER: **Accept Suggestion:** ☐

Contractor shall provide the transformer vault plug based on the Option 4 solution with the following amendments;

1. Provide 2x4 cross members at max. 12" o.c. spacing;
2. Face of all 2x4 members shall be flush with outside face of existing vault wall to facilitate extension of plywood sheet beyond ventilation opening (see number 5 below);
3. Plywood sheet shall be two layers of 5/8" for a total of 1.25" thick, laminate plywood layers with waterproof adhesives;
4. Secure plywood to 2x4 members with galvanized nails or screws at min. 6" spacing;
5. Extend plywood sheet min. 6" beyond edge of ventilation opening (all four sides); and,

Number	Subject	Status	Date Created	Date Required	Date Answered	Cost Impact	Proceed

Option 2- Added additionall 2x4 crossmembers which would further restrict air flow to the (e) vault.
Option 3- Nail on a plywood sheet that would enclose the entire vault vent opening.
Option 4 - Nail on a plywood sheet and waterproof the plywood to prevent water intrusion as well.

Note: Transworld Construction is concerned about restricting airflow into a vault that originally was designed to have this open vent. We are not familiar with any impact sealing this vent will have on the existing equipment.

6. Seal perimeter of plywood sheet and existing concrete vault wall with appropriate sealant to ensure weather tightness (all four sides).

In addition, Contractor is required to ensure sufficient air flow is provided to existing underground vault/electrical equipment at all times. Existing ventilation openings (one per vault) shall not be plugged until new ventilated manhole covers per C-5000/C-5001 are installed. The new ventilated manhole covers must be protected from damage and/or soiling from concreting activities of the adjacent stem wall. The existing ventilation openings must be plugged prior to start of BSE activities to restrict entry of water and/or construction debris into the existing underground vault/transformer spaces.

T-0044 **BSE - Pile Mat Slab Connection** **Closed** **02/25/2011** **03/07/2011** **03/02/2011** **Potentially** ☐

From: Webcor Construction LP Nhi Tran **To:** Turner Construction Compan Daphne Faulkner **Answered By:** Adamson Associates, Inc George Metzger

Co-Author: Balfour Beatty Infrastructure, Inc. Ural Yal

REQUEST:

Reference Sheet S-3003

Reference Detail 2 on S-3003 - "Slip Detail @ Trestle Pile Mat Connection"
Please confirm that this detail only applies to the trestle and not the bridge as stated.

SUGGESTION:

ANSWER: **Accept Suggestion:** ☐

TT Reply: The trestle supports the bridge, therefore detail 2/S-3003 does apply to the bridge.

T-0045 **301 Mission Screen Wall - Void Below Existing Embed** **Closed** **03/02/2011** **03/12/2011** **03/17/2011** **Potentially** ☐

From: Webcor Construction LP David Hungerford **To:** Turner Construction Compan Daphne Faulkner **Answered By:** URS Corporation David Fyfe

Co-Author:

REQUEST:

Reference: Attached pictures

The new 301 Mission screen wall location is to be laid out

SUGGESTION:

ANSWER: **Accept Suggestion:** ☐

Voids below the existing embed plate shall be filled by use of grouting applied by use of low pressure grouting methods to deliver grout into void spaces.

Number	Subject	Status	Date Created	Date Required	Date Answered	Cost Impact	Proceed

over an existing embed plate. At that plate #8 rebars are to be epoxied per RFI T-0027. Currently in the field the embed has been cut where the dowels are to be installed and holes are being drilled to the required 30" depth. It has been discovered that there are voids below the exitsing embed plate of up to 1.5". See attached pictures for some locations where this condition occurs. Please advise if this void is to be filled.

The result following grouting shall be that all voids are fully grouted. All grout materials shall be non-shrink grout. Pressure grouting shall be performed by qualified personnel who have experience in low pressure grouting steel plates. Contractor shall submit qualifications in the form of resumes identifying project experience utilizing low pressure grouting for personnel performing the work.

The Contractor shall provide a submittal identifying the non-shrink grout mix proposed for use and a narrative providing a full description of the means and methods proposed to result in grout flow from input point to output point including methods to result in prevention of trapped air (air is to be displaced by grout flow). A narrative describing means and methods shall specifically include identification of proposed equipment and the proposed porting and venting to allow installation of non-shrink grout and displacement of trapped air.

Where the embedded plate is not continuous (where the plate is not provided), the existing concrete surface shall be prepared meeting all requirements of a bonded construction joint.
- David Fyfe 03/16/2011

==========Additional Response==========
Pending approval by the TJPA, a CR will be issued.
- Kevin Chiu 03/17/2011

T-0046 **BSE - CLSM Slump** **Closed** **03/03/2011** **03/13/2011** **03/07/2011** **Potentially** ☐

From: Webcor Construction LP Nhi Tran
Co-Author: Balfour Beatty Infrastructure, Inc. Ural Yal
To: Turner Construction Compan Daphne Faulkner
Answered By: Adamson Associates, Inc George Metzger

REQUEST:

Reference Specification Section 03 30 01

The CLSM slump range for the Buttress Shoring Excavation Work is listed between 10" to 12". BBII has

SUGGESTION:

ANSWER: **Accept Suggestion:** ☐

03/03/2011 Kevin Clinch

ARUP Response - A CLSM mix with a slump range of 7" +/- 1" is acceptable pending our review of the

Number	Subject	Status	Date Created	Date Required	Date Answered	Cost Impact	Proceed

concerns about the CLSM mix segregating during placement with such a high slump. Please confirm if it is acceptable to provide a CLSM mix with a slump range of 7" +/- 1" in lieu of the 10" to 12" called for in the Specification.

Contractor's mix design. Arup will work with the Owner's Testing Agency to refine the Field Quality Control procedures for checking slump and segregation of the CLSM.

T-0047 **BSE - Joint Preconstruction Survey** **Closed** **03/03/2011** **03/13/2011** **03/11/2011** **Potentially** ☐

From: Webcor Construction LP Nhi Tran **To:** Turner Construction Compan Daphne Faulkner **Answered By:** Transbay PMPC Alfred Lau

Co-Author: Balfour Beatty Infrastructure, Inc. Ural Yal

REQUEST:

Reference Specification Section 01 15 40 and attached list

Attached is the list of buildings that BBI has identified for joint survey, in accordance with specification section 01 15 40. BBI requests confirmation of this list.

Please provide BBI a contact for coordinating the joint survey effort. BBI would like to do this work on the week of March 14, 2011.

SUGGESTION:

ANSWER: **Accept Suggestion:** ☐

Arup has been, and will continue, performing interior preconstruction surveys at the properties listed by BBI. Arup will share the information with contractors as it becomes available. A representative from BBI may accompany Arup at the remaining site surveys. Contact Stephanie Reichin 415.227.9700 for a schedule of the remaining site visits.

T-0047.1 **BSE - Preconstruction Joint Survey Exteriors of Buildings** **Closed** **03/21/2011** **03/31/2011** **03/28/2011** **Potentially** ☐

From: Webcor Construction LP Nhi Tran **To:** Turner Construction Compan Daphne Faulkner **Answered By:** Transbay PMPC Alfred Lau

Co-Author: Balfour Beatty Infrastructure, Inc. Ural Yal

REQUEST:

Reference RFI #T-0047 and attached email

Please confirm the exterior of the building, in accordance with item 1.5 D in the specification 01 15 40 Joint Survey, is also covered by the response of RFI T-0047 as well as the interior of the building.

If not, please contact "property owners within 25 feet of the construction excavation" and arrange the joint survey immediately.

SUGGESTION:

ANSWER: **Accept Suggestion:** ☐

Response to RFI T-0047 was specific to the query posed relating to the preconstruction survey of adjacent building interiors (basements) that Arup is conducting and the feasibility for the contractor joining Arup for any future visits.

For the pre-construction joint-examination and photographing of adjacent building exteriors per 01 15 40 - 1.5.D, please coordinate with Turner (CMO), who will coordinate with Singer Assoc, TJPA's outreach consultant, to invite and/or coordinate the possible attendance of adjacent property owners. Please

Number	Subject	Status	Date Created	Date Required	Date Answered	Cost Impact	Proceed

submit a list of properties and planned schedule of the examination/photography activities ASAP for record and for coordination.

T-0048 **BSE - Building Demolition in Zone 1** **Closed** **03/03/2011** **03/13/2011** **03/10/2011** **Potentially** ☐

From: Webcor Construction LP Nhi Tran **To:** Turner Construction Compan Daphne Faulkner **Answered By:** Turner Construction Comp Jack Adams

Co-Author: Balfour Beatty Infrastructure, Inc. Ural Yal

REQUEST:

Reference CR-T-005 and Sheet SKGT-0001-R1

CR T-005 appears to require additional building demolition. Please provide a schedule for this demolition work and an estimated completion date as this will potentially impact BBI's schedule and work sequence.

SUGGESTION:

ANSWER: **Accept Suggestion:** ☐

The "Eminent Domain" legal process is incomplete at this time - estimated completion date is 5/29/11. Therefore the demolition contract for 60 Tehama, 85 Natoma, 564 Howard and 568 Howard has not been issued and a schedule cannot be provided. The estimated demolition completion date is between 7/29/11 and 8/29/11.

T-0049 **BSE - Constructware** **Closed** **03/03/2011** **03/13/2011** **03/03/2011** **Potentially** ☐

From: Webcor Construction LP Nhi Tran **To:** Turner Construction Compan Daphne Faulkner **Answered By:** Turner Construction Comp Daphne Faulkner

Co-Author: Balfour Beatty Infrastructure, Inc. Ural Yal

REQUEST:

Reference Specification Section 01 10 40

Specification Section 01 10 40 Article 1.6 B4 states: "TJPA will provide Trade Subcontractors with the necessary training and access to Constructware"

BBI would like to schedule this training and make arrangements for access. Please provide a contact to get this process started.

SUGGESTION:

ANSWER: **Accept Suggestion:** ☐

Trade contractors will be given "View Only" access to Constructware. Contact Turner to schedule access and training. W/O is still responsible for managing the information flow to and from their trade contractors. TJPA will not accept information entered by trade contractors. All trade RFIs and submittals are to be reviewed by W/O prior to submission to TJPA.

T-0050 **BSE - Revised Plans for CR T-005B** **Closed** **03/07/2011** **03/17/2011** **03/14/2011** **Potentially** ☐

Webcor/Obayashi Joint Venture

PROJECT MANAGEMENT - REQUEST AND ANSWERS LOG

30100 - Transbay Transit Center Project

Number	Subject	Status	Date Created	Date Required	Date Answered	Cost Impact	Proceed

From: Webcor Construction LP Nhi Tran
Co-Author: Balfour Beatty Infrastructure, Inc. Ural Yal
To: Turner Construction Compan Daphne Faulkner
Answered By: Turner Construction Comp Daphne Faulkner

REQUEST:

Reference CR T-005B

As BBII has explained at the TG03 Trade Subcontractor - Design Team Coordination Meeting No. 3, held on February 23, 2011, in order for BBII to provide meaningful pricing and make preparations to order materials that will be required for the changed work, BBII is respectfully requesting revised contract documents for all work that is impacted by this change, specifically including, but not limited to, geotechnical and demolition drawings.

These drawings will allow BBII to accurately identify the changes and provide pricing that complies with Section 6 of the General Conditions.

In addition, due to increasing steel prices and long lead times, BBII proposes a revision to CR T-005B to allow for the ordering of additional shoring wall beams prior to the rest of the Change Order being negotiated. BBII believes this will reduce the overall cost of this change. Upon receipt of the revised drawings that include the new shoring wall beam table (GT-5101), BBII will be able to receive quotes for this work and finalize an order.

SUGGESTION:

ANSWER: **Accept Suggestion:** ☐

URS will issue a revised D-2200 drawing this week.

03/10/2011 - George Metzger

Some parts of the question need to be answered by URS/PMPC/TJPA/Turner.

ARUP Response:

Arup's response regarding the request for geotechnical drawings and the soldier pile schedule is as follows: the "CDSM Shoring Wall Schedule" on GT-5101 does not change. The wall segments shown on the plan were simply extended to include the increased wall length. It is possible that the top of wall elevation may change +/- 1 ft once the finish grade is established following demolition of the buildings. The length of the soldier pile and the depth of the drilled hole from the ground surface will not change from that shown on the schedule.

In addition to GT-2101 which was issued as SKGT-0001-R1 in response to RFI-017, the change order will include the following drawings: GT-0000 (the drawing index will be clouded to show the affected drawings); GT-0100, GT-1110, GT-2000 (the shoring wall layout will be revised as shown and detailed on SKGT-0001-R1); and GT-5105 (the sections at 564 and 568 Howard will be deleted as these buildings will be demolished; a section will be added at 580 Howard showing the approximate distance to the building corner). Aside from the changes to GT-2101 which have been issued as SKGT-0001-R1, We consider the above described drawing changes to have no cost impact and therefor have not yet been issued.

Number	Subject	Status	Date Created	Date Required	Date Answered	Cost Impact	Proceed
T-0051	Returned Submittal Comments	Closed	02/16/2011	02/26/2011	03/10/2011	Potentially	☐

From: Webcor Construction LP Daniel Foudy
To: Turner Construction Compan Daphne Faulkner
Answered By: Turner Construction Comp Daphne Faulkner

Number	Subject	Status	Date Created	Date Required	Date Answered	Cost Impact	Proceed

Co-Author:

REQUEST:

Ref Spec section 01 13 10

According to the Action and Distribution (section 1.11) of the submittal specifications, Submittals shall be returned indicating one of the following:

No Exceptions Taken

Make Corrections Noted

Revise and Resubmit

Rejected

We have received submittals back as "Not Reviewed" or "For Record Only". Please confirm these responses are acceptable and should be incorporated into the specifications.

SUGGESTION:

ANSWER: **Accept Suggestion:** ☐

These responses are acceptable and will be incorporated into a revised specification section 01 13 10 to be issued in the future.

T-0052 **BSE - P Parcel** **Closed** **03/09/2011** **03/19/2011** **03/10/2011** **Potentially** ☐

From: Webcor Construction LP Nhi Tran **To:** Turner Construction Compan Daphne Faulkner **Answered By:** Turner Construction Comp Jack Adams

Co-Author: Balfour Beatty Infrastructure, Inc. Ural Yal

REQUEST:

Reference Specification Section 01 14 19, 1.4

According to the referenced specification section, Parcel P is available as of November 1, 2010 and will be available until 2013. BBI was informed that this parcel will not be available for this contract.

Please confirm.

If this parcel is not available, are there any alternative parcels that will be available for construction staging?

SUGGESTION:

ANSWER: **Accept Suggestion:** ☐

Parcel P is available for Webcor-Obayashi use in accord with Spec. 01-14-19 - see attached sketch for shared use with TJPA.

T-0053 **BSE - Waler Standoff** **Closed** **03/09/2011** **03/19/2011** **03/14/2011** **Potentially** ☐

From: Webcor Construction LP Nhi Tran **To:** Turner Construction Compan Daphne Faulkner **Answered By:** Adamson Associates, Inc George Metzger

Number	Subject	Status	Date Created	Date Required	Date Answered	Cost Impact	Proceed

Co-Author: Balfour Beatty Infrastructure, Inc. Ural Yal

REQUEST:

Reference Sheet GT-1110, RFI #T-0018, and attached photos and drawings

Previous RFI #T-0018 - BSE - Waler to CDSM Wall spacing addressed BBI's concern with only having 6" clear between the face of the CDSM Wall and the Waler. Conversations in the weekly TG03 BSE Design Team Coordination meetings have re-raised the issue and BBI believes it requires additional consideration. The response in RFI #T-0018 said that rebar couplers in the wall verticals (in the next contract) would be used to eliminate the conflict. BBI believes that this seems to be impractical and not cost effective for over 3000 lf feet of wall and 4 levels of walers. Providing a standoff equal to the wall thickness would be an additional cost to the BSE contract, but BBI believes it would be minor compared to dealing with the cost to deal with the conflict later.

BBI is requesting to please re-evaluate and provide direction.

Attached is a suggested detail as well as examples where it has been used before, for your consideration.

SUGGESTION:

ANSWER: **Accept Suggestion:** ☐

ARUP Response:

Provided the criteria shown in the Contact Documents is satisfied, the proposal is acceptable.

Additionally:

Provided this proposal is acceptable to the TJPA, the internal bracing design submittal shall include the details and calculations associated with this proposal.

The soldier piles shall be checked for the increased moment due to the eccentric strut reaction. This check shall be reported in the internal bracing submittal.

No increase in torsional loading on the soldier pile is permitted.

End of Comments

T-0053.1 **BSE - Waler Standoff** **Closed** **03/09/2011** **03/19/2011** **03/22/2011** **Potentially** ☐

From: Webcor Construction LP Nhi Tran **To:** Turner Construction Compan Daphne Faulkner **Answered By:** Transbay PMPC Alfred Lau

Co-Author: Balfour Beatty Infrastructure, Inc. Ural Yal

REQUEST:

Reference Sheet GT-1110, RFI #T-0018, and attached photos and drawings

Previous RFI #T-0018 - BSE - Waler to CDSM Wall spacing addressed BBI's concern with only having 6" clear between the face of the CDSM Wall and the Waler. Conversations in the weekly TG03 BSE Design Team Coordination meetings have re-raised the issue and BBI believes it requires additional consideration. The response in RFI #T-0018 said that rebar couplers in the wall verticals (in the next contract) would be used to eliminate the conflict. BBI believes that this seems to be impractical and not cost effective for over 3000 lf feet of wall and 4

SUGGESTION:

ANSWER: **Accept Suggestion:** ☐

REVISED RESPONSE TO RFI #T-0053

TJPA revises response to as follows:

The W/O and BBI proposal to increase the spacing between the waler and CDSM wall is acceptable to TJPA since it meets the requirements in 31 55 00 1.5 DESIGN subsections I, J, K, L, and M. This design is for Contractor use. This proposal from the Contractor creates multiple benefits for W/O and BBI including The waler is out of the way of the rebar and this will help W/O with their coordination with the Train Box concrete work subcontractor.

Number	Subject	Status	Date Created	Date Required	Date Answered	Cost Impact	Proceed

levels of walers. Providing a standoff equal to the wall thickness would be an additional cost to the BSE contract, but BBI believes it would be minor compared to dealing with the cost to deal with the conflict later.

BBI is requesting to please re-evaluate and provide direction.

Attached is a suggested detail as well as examples where it has been used before, for your consideration.

W/O benefits since more rebar can be installed with this increased spacing which saves time to the schedule and costs associated with the waterproofing and rebar installations.
BB benefits because it appears that there is a decrease to the number of times that struts and walers must be moved.
BB benefits in that strut length remains essentially the same when restrutting after Train Box wall sections are completed.

TJPA and the Program Management Team suggest that W/O and BB proceed with a 3' - 6'' spacing or whatever dimension is necessary to insure that the walers are not within the Train Box Wall profile. If the walers position requires rework, the Contractor and SubContractor take full responsibility to meet design requirements with no change to contract cost.
TJPA agrees to this suggestion from the Contractor to offset the waler from the CDSM wall to allow for the construction of the Train Box wall. TJPA requests that the Contractor proceed on this issue as a no-cost resolution to these RFIs. If W/O finds that this Internal Bracing for Shoring Wall design does have an additional cost to TJPA, the funds will come from the CM/GC Contingency Fund.

T-0053.2 **BSE - Waler Standoff** **Closed** **03/09/2011** **03/19/2011** **03/28/2011** **Potentially** ☐

From: Webcor Construction LP Nhi Tran **To:** Turner Construction Compan Daphne Faulkner **Answered By:** Transbay PMPC Douglas Jacobson

Co-Author: Balfour Beatty Infrastructure, Inc. Ural Yal

REQUEST:

Reference Sheet GT-1110, RFI #T-0018, and attached photos and drawings

Previous RFI #T-0018 - BSE - Waler to CDSM Wall spacing addressed BBI's concern with only having 6" clear between the face of the CDSM Wall and the Waler. Conversations in the weekly TG03 BSE Design Team Coordination meetings have re-raised the issue and BBI believes it requires additional consideration. The response in RFI #T-0018 said that rebar couplers in the wall

SUGGESTION:

ANSWER: **Accept Suggestion:** ☐

TJPA and Program Management Team expect that the Contractor and Sub-Contractor meet the design requirements for the Design/Build of the Internal Bracing as specified in 31 55 00 INTERNAL BRACING FOR SHORING WALL and per the Contract Drawings. As subsection 1.8 M. states,

"Walers are to be placed against the shoring wall on spacers to provide a minimum of 6 inches of clearance between the waler and the shoring wall.

Number	Subject	Status	Date Created	Date Required	Date Answered	Cost Impact	Proceed

verticals (in the next contract) would be used to eliminate the conflict. BBI believes that this seems to be impractical and not cost effective for over 3000 lf feet of wall and 4 levels of walers. Providing a standoff equal to the wall thickness would be an additional cost to the BSE contract, but BBI believes it would be minor compared to dealing with the cost to deal with the conflict later.

BBI is requesting to please re-evaluate and provide direction.

Attached is a suggested detail as well as examples where it has been used before, for your consideration.

The 6 inch clearance is to provide a continuous path to allow the outboard curtain of reinforcement of the permanent wall to be routed through this space without requiring use of couplers or added lap splices at walers..."

The Submittal for Internal Bracing needs to address the concerns expressed by the reviewers including Arup in their response to RFI T-0053 which states:

"Provided the criteria shown in the Contact Documents is satisfied, the proposal is acceptable.

Additionally:

Provided this proposal is acceptable to the TJPA, the internal bracing design submittal shall include the details and calculations associated with this proposal.

The soldier piles shall be checked for the increased moment due to the eccentric strut reaction. This check shall be reported in the internal bracing submittal.

No increase in torsional loading on the soldier pile is permitted."

T-0054 **BSE - AC Overlay at Temporary Bridges** **Closed** **03/09/2011** **03/19/2011** **03/25/2011** **Potentially** ☐

From: Webcor Construction LP Nhi Tran **To:** Turner Construction Compan Daphne Faulkner **Answered By:** URS Corporation David Fyfe

Co-Author: Balfour Beatty Infrastructure, Inc. Ural Yal

REQUEST:

Reference Specification Section 01 53 13, 1.3.A.6 and attached material information

For the temporary bridges, BBII will be using the attached structural bridge deck material from Big R Bridge. The troughs are filled completely with AC to the top of the decking, and an overlay will be applied over the top. BBII would like to use a 2" minimum overlay, resulting in an overall cross section with an average 4" thickness. Bridge geometry requirements specified in section 01 53 13 - 1.3.A.6 will be met without reducing the overlay thickness

SUGGESTION:

ANSWER: **Accept Suggestion:** ☐

2" minimum asphalt concrete (AC) overlay not acceptable. Provide minimum of 4" asphalt concrete (AC) overlay per contract documents (specification section 01 53 13, 1.3.B.3).

Number	Subject	Status	Date Created	Date Required	Date Answered	Cost Impact	Proceed

below the 2" minimum.

Please confirm this is acceptable.

T-0055 **BSE - Request for Soil Parameters** **Closed** **03/09/2011** **03/19/2011** **03/14/2011** **Potentially** ☐

From: Webcor Construction LP Nhi Tran **To:** Turner Construction Compan Daphne Faulkner **Answered By:** Adamson Associates, Inc George Metzger

Co-Author: Balfour Beatty Infrastructure, Inc. Ural Yal

REQUEST:

Reference Sheet GT-1110 and Specification Section 31 55 00

In the TG03 BSE Design Team Coordination meeting held on 03/09/2011, Arup said they would provide BBII with soil input parameters for use in BBI's model.

Please provide BBI with this information.

SUGGESTION:

ANSWER: **Accept Suggestion:** ☐

ARUP Response:

Summary tables of the soil properties used in Arup's PLAXIS analysis are attached.

T-0056 **BSE - CR T-006** **Closed** **03/09/2011** **03/19/2011** **03/10/2011** **Potentially** ☐

From: Webcor Construction LP Nhi Tran **To:** Turner Construction Compan Daphne Faulkner **Answered By:** Turner Construction Comp Daphne Faulkner

Co-Author: Balfour Beatty Infrastructure, Inc. Ural Yal

REQUEST:

Reference CR T-006

The Change Request documents do not indicate who will have the maintenance responsibility for the AC walkway.

BBII has the following questions:
1. Should BBII include pricing for maintenance?
If this walkway is going to get placed on top of the 3" minus rubble, a fair amount of maintenance would be required.
2. When is this walkway scheduled to be constructed?
And if maintenance is needed, when would it start?
3. Are the typical fence and K-rail shown in the section the same ones that are protecting the perimeter, or an additional row that creates a walkway that has both sides fenced, protecting the public from construction and vehicle

SUGGESTION:

ANSWER: **Accept Suggestion:** ☐

This is not an RFI. W/O has control of the site and is to coordinate maintenance duration with their subcontractor for pricing.

Number	Subject	Status	Date Created	Date Required	Date Answered	Cost Impact	Proceed

traffic?

BBII needs to have this information in order to provide accurate pricing for this Change Request T-006. Please advise.

T-0056.1 **BSE - CR T-006** **Closed** **03/24/2011** **04/03/2011** **04/12/2011** **Potentially** ☐

From: Webcor Construction LP Nhi Tran **To:** Turner Construction Compan Daphne Faulkner **Answered By:** Turner Construction Comp Jack Adams

Co-Author: Balfour Beatty Infrastructure, Inc. Ural Yal

REQUEST:

Reference RFI T-0056 and CR T-006

Please confirm that any necessary repairs of the AC overlay are excluded from CR T-006 scope as discussed at the TG03 BSE - Design Coordination Meeting on 3/23/2011. Also, please provided additional sketches we discussed at the meeting as well. Finally, please provide a complete copy of Demo Contractor¿s change order related to CR T-006 to fully understand the limits of their responsibility.

SUGGESTION:

ANSWER: **Accept Suggestion:** ☐

CM/GC is responsible for maintenance of site - including these sidewalks- debris, cleaning, graffiti etc. as specified in contract documents.

The AC overlay was installed by Demolition Contractor per RFI 24.2. The basements were filled per contract using crushed concrete, compaction methods were used by EBi and verified by ISI Special Inspector. The AC overlay was installed per RFI 24.2 with asphalt applied no less than 3" thick.

However, the CM/GC's concern is related to the required repair if there is a failure of this asphalt. If there is a failure of the AC overlay (if caused by pedestrian traffic on this sidewalks- not construction equipment), then this should be brought to the attention of TJPA Rep at that time in accord with contract.

Demo RFI 24.2, EBi Proposal drawings and Change Order attached.

T-0057 **BSE - Verticality and Sonic Testing on Drilled Piers and Shafts** **Closed** **03/10/2011** **03/20/2011** **03/11/2011** **Potentially** ☐

From: Webcor Construction LP Nhi Tran **To:** Turner Construction Compan Daphne Faulkner **Answered By:** Adamson Associates, Inc George Metzger

Co-Author: Balfour Beatty Infrastructure, Inc. Ural Yal

REQUEST:

Reference Sheet GT-5202 and Specification Section 31

SUGGESTION:

ANSWER: **Accept Suggestion:** ☐

ARUP Response:

Number	Subject	Status	Date Created	Date Required	Date Answered	Cost Impact	Proceed

63 29

Specification Section 31 63 29, 3.8.I.3 states "The contractor shall perform a test to determine verticality of the steel tubes, or drilled holes, that are going to be used for the sonic tests."

BBII has been advised by a number of testing firms that verticality tests cannot be performed on steel tubes or PVC tubes tied to steel cages. Detail 12 on Drawing GT-5202 shows 4 equally spaced PVC or steel tubes tied to reinforcing steel cage. BBII has also been informed that, as of now, there is not a specification in existence that mentions vertical tolerances of CSL tubes.

BBII is proposing to do the following in lieu of formally testing the CSL tubes for verticality:
1. BBII will make sure that the tubes are parallel and symmetrically placed. The cages and tubes will be properly inspected for positioning, spacing, parallelism prior to placing the cages into the hole. This is the most important inspection to ensure accurate CSL results.
2. Since the tubes are tied directly to a vertical cage, and the cages and casings are tested for verticality anyway, BBII will do a visual inspection to ensure that the tubes are sufficiently "vertical" for CSL testing purposes prior to placement of tremie concrete.
3. BBII will make sure that the cages are carefully lifted in a manner that limits the deflections of the cage to ensure that the CSL tubes do not fail at the joints.

Please confirm if this is acceptable.

The verticality of the holes / tubes must be checked to properly interpret the CSL test results. If verticality tests cannot be performed on steel tubes, consider using PVC tubes. The integrity of the PVC tubes can be maintained by filling them with water and inserting alignment bars into them prior to concrete pouring.

T-0058 **BSE - Underground Utilities Removal on Beale Street** **Closed** **03/11/2011** **03/21/2011** **03/23/2011** **Potentially** ☐

From: Webcor Construction LP Nhi Tran **To:** Turner Construction Compan Daphne Faulkner **Answered By:** Turner Construction Comp Jack Adams

Co-Author: Balfour Beatty Infrastructure, Inc. Ural Yal

REQUEST:

Reference Sheet D-2230

Per Drawing D-2230 Note 2, "Unless specified otherwise all utilities to be removed have already been cut and

SUGGESTION:

ANSWER: **Accept Suggestion:** ☐

Beale Street Utilities PGE and ATT. Substructure installation and work is incomplete. Work is scheduled to complete by 5/30/11. Cabling/cutovers & pressurizing gas pipe forecasted to be complete by

Number	Subject	Status	Date Created	Date Required	Date Answered	Cost Impact	Proceed

capped outside limits of work by Transbay Transit Center Program Relocation of Utilities Project including future utilities installed by the Transbay Transit Center Program Relocation of Utilities Project. Contractor to coordinate removal of utilities with TJPA representative."
Please confirm that the work described in Note 2 has been completed for all underground utilities on Beale St.
If work has not yet been completed, please provide a list of utilities not yet abandoned and dates when the said utilities are to be cut and capped.

6/30/11. ATT will finish in this window also.

***** These dates are subject to change due to weather, operational issues and any conflicts outside the control of PG&E******

Beale St. Webcor-Obayashi: Relocation of Utilities project will provide the completion dates for utilities on Beale St.

T-0059 **BSE - Underground Utilities Removal on Fremont Street** **Closed** **03/11/2011** **03/21/2011** **03/23/2011** **Potentially** ☐

From: Webcor Construction LP Nhi Tran **To:** Turner Construction Compan Daphne Faulkner **Answered By:** Turner Construction Comp Jack Adams

Co-Author: Balfour Beatty Infrastructure, Inc. Ural Yal

REQUEST:

Reference Sheet D-2230

Per Drawing D-2230 Note 2, "Unless specified otherwise all utilities to be removed have already been cut and capped outside limits of work by Transbay Transit Center Program Relocation of Utilities Project including future utilities installed by the Transbay Transit Center Program Relocation of Utilities Project. Contractor to coordinate removal of utilities with TJPA representative."
Please confirm that the work described in Note 2 has been completed for all underground utilities on Fremont St.
If work has not yet been completed, please provide a list of utilities not yet abandoned and dates when the said utilities are to be cut and capped.

SUGGESTION:

ANSWER: **Accept Suggestion:** ☐

Fremont Street PGE Final conduit installation scheduled to be complete 4/11/11. Cabling and cutovers forecasted to be complete by 6/4/11.

***** These dates are subject to change due to weather, operational issues and any conflicts outside the control of PG&E******

Fremont St. Webcor-Obayashi: Relocation of Utilities project will provide the completion dates for utilities on Fremont St.

T-0060 **BSE - Underground Utilities Removal on 1st Street** **Closed** **03/11/2011** **03/21/2011** **03/23/2011** **Potentially** ☐

From: Webcor Construction LP Nhi Tran **To:** Turner Construction Compan Daphne Faulkner **Answered By:** Turner Construction Comp Jack Adams

Co-Author: Balfour Beatty Infrastructure, Inc. Ural Yal

REQUEST:

Reference Sheet D-2230

SUGGESTION:

ANSWER: **Accept Suggestion:** ☐

First Street - Substructure installation scheduled to complete by 4/30/11. Cabling and cutovers forecasted

Number	Subject	Status	Date Created	Date Required	Date Answered	Cost Impact	Proceed

Per Drawing D-2230 Note 2, "Unless specified otherwise all utilities to be removed have already been cut and capped outside limits of work by Transbay Transit Center Program Relocation of Utilities Project including future utilities installed by the Transbay Transit Center Program Relocation of Utilities Project. Contractor to coordinate removal of utilities with TJPA representative."
Please confirm that the work described in Note 2 has been completed for all underground utilities on 1st St.
If work has not yet been completed, please provide a list of utilities not yet abandoned and dates when the said utilities are to be cut and capped.

to be complete by 6/24/11

***** These dates are subject to change due to weather, operational issues and any conflicts outside the control of PG&E******

First St. Webcor-Obayashi: Relocation of Utilities project will provide the completion dates for utilities on First St.

T-0061 **BSE - Concerns About Pile To Mat Slab Connection** **Closed** **03/15/2011** **03/25/2011** **03/23/2011** **Potentially** ☐

From: Webcor Construction LP Nhi Tran **To:** Turner Construction Compan Daphne Faulkner **Answered By:** Adamson Associates, Inc George Metzger

Co-Author: Balfour Beatty Infrastructure, Inc. Ural Yal

REQUEST:

Reference Sheet S-3003 and attached detail

BBII has concerns that the trestle pile to mat slab slip connection as shown in detail 2 on S-3003 will not work as intended. Based on BBII's understanding that this joint is intended to allow the mat slab to deflect upward and our limited knowledge of the permanent structure design, BBII has listed some concerns with this connection below:
1. BBII does not think the sleeve will be able to slide with the bolts and slotted holes completely encased in concrete. (see attached)
2. If the slab does deflect upwards and the lower section of pile is no longer in contact with the bearing plate, then the mat slab is carrying the entire load on the pile.
3. Any upward movements of the slab will affect the trestle supper structure framing. Differential upward deflections could cause damage depending on severity.

BBII does wish to bear the risk of re-designing this joint due to the interaction with the permanent structure, however BBII has attached a suggestion that they feel would eliminate some of their concerns listed above.

Please provide a revised detail or rebut BBII concerns if

SUGGESTION:

ANSWER: **Accept Suggestion:** ☐

Thornton Tomasetti response:

Comments in response to BBII concerns:

1. Bolts/slotted holes could be isolated from the concrete via styrofoam blocks.

2. Anticipated slab movement upward is due to rise of groundwater pressure after the dewatering pumps are turned off - which is after structure is completed and trestle work is completed.

Comments regarding proposed alternate detail:

1. Proposed detail does not address waterproofing at bottom of mat and allows water infiltration into the mat as currently presented.

AAI Response: Alternate detail will not satisfy waterproofing requirements.

Number	Subject	Status	Date Created	Date Required	Date Answered	Cost Impact	Proceed

you still believe the detailed connection is the best suited for this application.

T-0062 **BSE - Concrete Submittals** **Closed** **03/16/2011** **03/26/2011** **03/23/2011** **Potentially** ☐

From: Webcor Construction LP Nhi Tran **To:** Turner Construction Compan Daphne Faulkner **Answered By:** Adamson Associates, Inc George Metzger

Co-Author: Balfour Beatty Infrastructure, Inc. Ural Yal

REQUEST:

Reference Specification Section 03 30 00

BBII believes a number of the submittals listed under the Cast In Place concrete spec section are not applicable to the BSE package.
- 03 30 00-1.6.A.5 Joint Locations for Concrete Slabs to receive a terrazzo finish ¿ None of the concrete work in this package is to receive flooring.
- 03 30 00-1.6A.6 Preconstruction Survey - This is intended for locations where concrete interfaces with existing construction. The mud slab does not interface with existing concrete, and BBII is not anticipating using concrete at the temporary bridges.
- 03 30 00-1.6.A.7 Survey of Flat Plate or Flat Slab Concrete Floors - No flat plates included in the BSE package.
- 03 30 00-1.6.A.8 Survey of as-built floor conditions - This is applicable to finish floors only, which are not included in the BSE package.
- 03 30 00-1.6.A.8 Structural Repairs - BBII does not believe there is any structural concrete requiring repair procedures in the BSE package.
- 03 30 00-1.6.A.10 Patching defective concrete finishes - The concrete work in the BSE package is not finished or exposed concrete, so BBII does not believe patching procedures are necessary.

Please confirm that the above submittals are not necessary for the BSE contract.

SUGGESTION:

ANSWER: **Accept Suggestion:** ☐

Thornton Tomasetti response:

Confirmed that the submittals listed in the RFI are not applicable for the BSE contract.

T-0063 **BSE - Request for Final EIS/EIR for Mitigation and Monitoring** **Closed** **03/16/2011** **03/26/2011** **03/21/2011** **Potentially** ☐

From: Webcor Construction LP Nhi Tran **To:** Turner Construction Compan Daphne Faulkner **Answered By:** Transbay PMPC Alfred Lau

Number	Subject	Status	Date Created	Date Required	Date Answered	Cost Impact	Proceed

Co-Author: Balfour Beatty Infrastructure, Inc. Ural Yal

REQUEST:

Reference Specification Section 01 35 65

BBII has been unable to obtain the report titled "Final EIS/EIR" dated November 29, 2007, as described in specification section 01 35 65, 1.1.A. The report requires the contractor to be responsible for mitigation measures and monitoring requirements that are included in the specification section.

Please provide BBII with this report.

SUGGESTION:

ANSWER: **Accept Suggestion:** ☐

A copy of Final EIS/EIR as referred in 01 35 65 is available in Constructware at the following location:

File Director - Programwide - 5 Program Coord - 10 Environmental - 11 EIS/EIR - EIS/EIS Transit Center - 2004 EIS - Original

A Constructware screenshot is attached for your information.

T-0064 **BSE - Demolition Contract Backfill Material** **Closed** **03/16/2011** **03/26/2011** **03/21/2011** **Potentially** ☐

From: Webcor Construction LP Nhi Tran **To:** Turner Construction Compan Daphne Faulkner **Answered By:** Turner Construction Comp Jack Adams

Co-Author: Balfour Beatty Infrastructure, Inc. Ural Yal

REQUEST:

Reference photos (attached)

It appears that the demolition contractor is leaving large unprocessed rubble along the backside of some of the basement walls (See attached photos). Per the demolition drawings included in BBII's contract, all of the material in this area should be crushed/processed concrete at 3" minus. Handling material that does not meet these requirements will be considered a changed condition. Please advise.

SUGGESTION:

ANSWER: **Accept Suggestion:** ☐

The site Parcel E is in progress. The basement will be filled in accord with the contract drawings with crushed/processed concrete at 3" minus upon completion of work by the demolition contractor - contract completion date 4/7/11.

Please do not use RFI to ask a question of an area not yet completed by the Demolition contractor. Webcor-Obayashi the CM/GC or Turner Construction CMO can easily answer these questions over the telephone or via e-mail.

T-0065 **301 Mission Wall - Length of dowels in concrete wall** **Closed** **03/17/2011** **03/27/2011** **03/24/2011** **Potentially** ☐

From: Webcor Construction LP David Hungerford **To:** Turner Construction Compan Daphne Faulkner **Answered By:** URS Corporation David Fyfe

Co-Author:

REQUEST:

Reference: Sheet S-5000, RFI T-0042

The response to RFI T-0042 specifies for the new concrete wall height to be exposed above the existing pavers a minimum 18". To achieve this requirement, the overall concrete wall height must be increased 8",

SUGGESTION:

ANSWER: **Accept Suggestion:** ☐

Use of fabricated #8 bars with lenton terminator acceptable. #8 embedment bars shall be dowelled 30" into existing concrete vault wall per RFI T-0027.

Resulting distance from top of #8 embedment bars with lenton terminator to top of new concrete wall will

Number	Subject	Status	Date Created	Date Required	Date Answered	Cost Impact	Proceed

therefore also increasing the length of the dowels that are to be installed.
The #8 embedment bars have already been purchased and fabricated. To achieve the higher wall height per response to RFI #T-0042, 90% of these fabricated #8 bars will have to be scrapped and new bars with the longer length must be made.
As an alternative, would it be acceptable to still use the fabricated #8 embedment bars dowelled 30" into the wall per RFI T-0027, with the lenton terminator which would be set 32" above the (E) steel plate?

vary between approximately 3" - 9", verify in field. If resulting distance from top of #8 embedment bars with lenton terminator to top of new concrete wall is greater than 6", contractor shall install #4 U-bars at 12" on center. #4 U-bars shall be centered between the #4 ties on both sides of the #8 bar(s). #4 U-bar legs shall be 22" long.

See attached coordination sketch.

TJPA Representative to field verify all rebar placement prior to Contractor placing concrete.

T-0066 **BSE - Pile Survey for Buttress Area** **Closed** **03/21/2011** **03/31/2011** **04/04/2011** **Potentially** ☐

From: Webcor Construction LP Nhi Tran **To:** Turner Construction Compan Daphne Faulkner **Answered By:** Turner Construction Comp Jack Adams

Co-Author: Balfour Beatty Infrastructure, Inc. Ural Yal

REQUEST:

It is BBII's understanding that EBI has completed their survey of the existing timber piles in the buttress area, including the area that was previously missed.

Please provide BBII with the remaining timber pile survey information, as indicated at the TG03 BSE Design Coordination Meeting.

SUGGESTION:

ANSWER: **Accept Suggestion:** ☐

Here is the remaining timber pile survey information.

It is expected that BBII will provide the TJPA a Credit since this survey scope was in contract Spec. 02-41-19 Para 1.4E

T-0067 **BSE - Joint Preconstruction Survey** **Closed** **03/21/2011** **03/31/2011** **03/23/2011** **Potentially** ☐

From: Webcor Construction LP Nhi Tran **To:** Turner Construction Compan Daphne Faulkner **Answered By:** Transbay PMPC Alfred Lau

Co-Author: Balfour Beatty Infrastructure, Inc. Ural Yal

REQUEST:

Reference RFI T-0047

Based on recent discussions, BBII is requesting confirmation of their understanding of Specification Section 01 15 40:

1. The inside survey of the adjacent buildings will be performed by ARUP and ARUP is in the process of

SUGGESTION:

ANSWER: **Accept Suggestion:** ☐

1. Correct.

2. The 19 buildings listed by ASC for BBI are all included in the pre-construction survey list prepared by Arup (copy attached).

(note the 101 1st Street address listed by ASC should be corrected to 100 1st & 533 Mission)

Number	Subject	Status	Date Created	Date Required	Date Answered	Cost Impact	Proceed

performing these surveys. BBII will attend these surveys to the extent possible. ARUP will also provide monitoring of these buildings, including but not limited to, active crack monitoring. ARUP will make the initial survey and subsequent monitoring information available to BBII. BBII reserves its right to review this information and request to perform its own indoor survey at any of the surveyed buildings. ARUP is solely responsible for the accuracy of the information provided and the continuation of the monitoring effort. ARUP is also responsible for ensuring that the property owners concur with the surveying methods and the results.
2. The list of 19 buildings previously provided by BBII is accurate and is in conformance with ARUP's list.
3. The TJPA will arrange for a survey of the outside of these buildings with the attendance of the property owners. BBII will attend with its professional photographer as required by the Specifications.

3. Correct.

T-0067.1 **BSE - Joint Preconstruction Survey Follow-Up** **Closed** **02/06/2012** **02/16/2012** **02/15/2012** **Potentially** ☐

From: Webcor Construction LP David Fields **To:** Arup Kevin Clinch **Answered By:** Webcor Construction LP David Fields

Co-Author:

REQUEST:

Per 01 15 40 and confirmed within RFI #T-067: ARUP is to provide monitoring information from adjacent buildings including but not limited to, active crack monitoring. ARUP will make the initial survey and subsequent monitoring information available to BBII. Please provide this information.

SUGGESTION:

ANSWER: **Accept Suggestion:** ☐

ARUP Response:

Arup has provided the pre-construction surveys to the TJPA via the Architect. The Contractor's request will be addressed by the TJPA.

T-0067.2 **BSE - Monitoring Information for 545 Mission** **Closed** **02/13/2012** **02/13/2012** **02/16/2012** **Potentially** ☐

From: Webcor Construction LP Joanne Filipas **To:** Turner Construction Compan Gary Krutsch **Answered By:** Adamson Associates, Inc George Metzger

Co-Author:

REQUEST:

SUGGESTION:

ANSWER: **Accept Suggestion:** ☐

Number	Subject	Status	Date Created	Date Required	Date Answered	Cost Impact	Proceed

Ref RFI T-0067 and T-0067.1

Please provide the monitoring information from 3/23/2011 through 11/01/2011 as agreed to in response to RFI T-0067.

George Metzger - ARUP Response: Arup has provided the TJPA, via the Architect, the reports and photographs documenting our visits which have been made at the request of the TJPA. The Contractor's request will be addressed by the TJPA.

Per Jack Adams of Turner Construction:

Contractor is directed to fulfill their contractual obligations and perform the work described in Specification Section 01 15 40 PROTECTION OF PROPERTY for all buildings adjacent to the Project.

Contractor will coordinate the Joint Survey to establish authenticity of claims by coordinating access and access dates with TJPA Representatives (Singer Associates).

T-0068 **BSE - Soil Encountered During Installation of Pile Removal Instrumentation** **Closed** **03/22/2011** **04/01/2011** **03/25/2011** **Potentially** ☐

From: Webcor Construction LP Nhi Tran **To:** Turner Construction Compan Daphne Faulkner **Answered By:** Adamson Associates, Inc George Metzger

Co-Author: Balfour Beatty Infrastructure, Inc. Ural Yal

REQUEST:

When ARUP was installing their pile removal instrumentation, they recorded the depths of the various soil layers they encountered.

Please provide BBII these depths for the pile extraction work.

SUGGESTION:

ANSWER: **Accept Suggestion:** ☐

ARUP Response:

Soil log attached.

T-0069 **BSE - Revised Shoring Wall Layout Clarification** **Closed** **03/23/2011** **04/02/2011** **03/28/2011** **Potentially** ☐

From: Webcor Construction LP Nhi Tran **To:** Turner Construction Compan Daphne Faulkner **Answered By:** Adamson Associates, Inc George Metzger

Co-Author: Balfour Beatty Infrastructure, Inc. Ural Yal

REQUEST:

BBII believes there is an issue with some of the information provided regarding the revised shoring wall

SUGGESTION:

ANSWER: **Accept Suggestion:** ☐

ARUP Response:

Number	Subject	Status	Date Created	Date Required	Date Answered	Cost Impact	Proceed

layout.

The following information was provided on drawing SKGT-0001-R1:

- The (x, y) distances of the intersection of the LOL's of segments X1-1 and R2-1 (Point P on attached sketch) from the intersection of 1-line and J-line: (x, y) = (73'-2 1/4", 166'-4").
- The (x, y) distances of the radial center of segment R2-1 (Point C on attached sketch) from the intersection of 1-line and J-line: (x, y) = (490'-7 1/4", 640'-10 1/4").
 The radius of the LOL of segment R2-1 as 633'-6".

The distance between the point P and point C can be calculated with the above information:
 ΔX = 490'-7¼" minus 73'-2¼" = 417'-5" = 417.417
 ΔY = 640'-10¼" minus 166'-4" = 474'-6¼" = 474.521
 D = (ΔX2 + ΔY2)1/2 = (417.4172 + 474.5212)1/2 = 632.053'

Using the distances provided on SKGT-0001-R1 gives a distance of 632.053' between point P and C. This distance must be 633'-6" because it lies along segment R2-1 and the radius of the arc is given. There must be an error in either the radius or one of the other given dimensions. BBII requests an expedited response as this information is critical to our work.

The dimensions to the corner of the LOL where segment X1-1 and R2-1 meet have been revised.

See the attached SKGT-0001-R2.

T-0070 **BSE - Excavation Permit for Pre-trenching in the Public Right of Way** **Closed** **03/24/2011** **04/04/2011** **03/25/2011** **Potentially** ☐

From: Webcor Construction LP Nhi Tran **To:** Turner Construction Compan Daphne Faulkner **Answered By:** Transbay PMPC Alfred Lau

Co-Author: Balfour Beatty Infrastructure, Inc. Ural Yal

REQUEST:

Reference Specification Section 01 14 10 and attached sheet

BBII would like to confirm the following:

SUGGESTION:

ANSWER: **Accept Suggestion:** ☐

For pre-trenching work, Contractor is expected to acquire excavation permit from DPW. Permit fee is reimbursable by TJPA.

Number	Subject	Status	Date Created	Date Required	Date Answered	Cost Impact	Proceed

- BBII is responsible for applying for Excavation Permits from the San Francisco Department of Public Works for all of the pre-trench excavations in the public right-of-way.
- Per Specification Section 01 14 10 Appendix (attached), TJPA will compensate BBII for the excavation permit costs.

In addition to the excavation permit, please note the the pre-trenching activity may need to obtain street space permit from DPW for work in Minna, Natoma, Fremont, Beale, and 1st (fee also reimbursed by TJPA), and Special Traffic Permit (as required) from DPT (or Sustainable Streets Division, SFMTA).

T-0071 | **RFI T-0071 - 301 Mission Screen Wall - Waterproofing at South face** | **Closed** | **03/25/2011** | **04/04/2011** | **04/05/2011** | **Potentially** ☐

From: Webcor Construction LP David Hungerford **To:** Turner Construction Compan Daphne Faulkner **Answered By:** URS Corporation David Fyfe

Co-Author:

REQUEST:

Reference: Attached letter

Please see the attached letter dated March 16, 2011 by Erik Liu of Transworld.

SUGGESTION:

ANSWER: **Accept Suggestion:** ☐

Please clarify this RFI.

It is not clear what information/clarification (if any) is being requested, nor is it clear if a specific recommendation is being proposed/submitted for acceptance.

T-0072 | **BSE - Concrete Sidewalk and SD Removal in Zone 4** | **Closed** | **03/30/2011** | **04/09/2011** | **04/11/2011** | **Potentially** ☐

From: Webcor Construction LP Nhi Tran **To:** Turner Construction Compan Daphne Faulkner **Answered By:** Turner Construction Comp Jack Adams

Co-Author: Balfour Beatty Infrastructure, Inc. Ural Yal

REQUEST:

Reference attached photos showing concrete sidewalk and sewer manhole in Zone 4, adjacent to 301 Mission building

The sidewalk and sewer manhole (as seen in the photos) is not in the BSE contract work and will need to be removed prior to pre-trenching. BBI is scheduled to start their pre-trenching activities on 04/11/2011.

Please advise.

SUGGESTION:

ANSWER: **Accept Suggestion:** ☐

Demolition Drawings D-1014, D1060, D-1063, D-1072, D1076, D-1202, D-1206 , D-1215 define extent of demolition contract.

Refer to Contract and BSE Drawings D-0001 and D1001 Notes for BSE Demolition scope.

Number	Subject	Status	Date Created	Date Required	Date Answered	Cost Impact	Proceed
T-0073	BSE - Request for Response Spectra	Closed	03/30/2011	04/09/2011	04/07/2011	Potentially	☐

From: Webcor Construction LP — Nhi Tran
Co-Author: Balfour Beatty Infrastructure, Inc. — Ural Yal
To: Turner Construction Compan — Daphne Faulkner
Answered By: Adamson Associates, Inc — George Metzger

REQUEST:

Reference Specification Section 01 53 13

During a meeting with the San Francisco DBI & DPW, it was expressed that BBII must use response spectra generated by ARUP in the design of the temporary bridges. It was also noted that if the bridges are going to be in place for over 5 years, the design must be for a permanent structure and the specified ground motion may not be suitable. Therefore, BBII requests response spectra for a ground motion with a 10% probability of exceedence in 50 years as specified, as well as for a ground motion with a 7.5% probability of exceedence in 75 years.

SUGGESTION:

ANSWER: **Accept Suggestion:** ☐

ARUP Response:

This request needs to be discussed in more detail. We will provide this in time for Tuesday's meeting.

Adamson Comment:

The meeting referenced will be held on April 12, 2011. The purpose of delivering the information in the meeting is to confirm that the Contractor and Arup have a common understanding of the requested information and the data being transmitted.

Number	Subject	Status	Date Created	Date Required	Date Answered	Cost Impact	Proceed
T-0073.1	BSE - Request for Response Spectra	Closed	03/30/2011	04/09/2011	04/14/2011	Potentially	☐

From: Webcor Construction LP — Nhi Tran
Co-Author: Balfour Beatty Infrastructure, Inc. — Ural Yal
To: Turner Construction Compan — Daphne Faulkner
Answered By: Adamson Associates, Inc — George Metzger

REQUEST:

Reference Response to RFI#T-0073

During a meeting with the San Francisco DBI & DPW, it was expressed that BBII must use response spectra generated by ARUP in the design of the temporary bridges. It was also noted that if the bridges are going to be in place for over 5 years, the design must be for a permanent structure and the specified ground motion may not be suitable. Therefore, BBII requests response spectra for a ground motion with a 10% probability of exceedence in 50 years as specified, as well as for a ground motion with a 7.5% probability of exceedence in 75 years.

SUGGESTION:

ANSWER: **Accept Suggestion:** ☐

ARUP Response:

Attached are:

1. Arup Amec (2010) report Tables 3-3(bedrock), 3-7a (base of structure West end of box), 3-7b (base of structure East end of box), 3-9 (ratio vertical to horizontal spectral acceleration ratios) and Table 3-4 giving scale factors for near-fault effects. Note that these spectra exclude structural interaction effects and do not include the progressive softening effects that will occur progressively in the Old Bay Clay.

2. Output from LS Dyna dynamic analyses of the temporary (1 in 100 year return period) condition at 301 Mission, adjacent Fremont Street abutment, using the Kobe bedrock and far-field motions to generate the horizontal acceleration spectrum at the top of the shoring wall. This produces increased spectral accelerations at the fundamental period (understood to be 0.8s) of the Contractor's bridge structure.

Arup recommends that a meeting be held to review

Number	Subject	Status	Date Created	Date Required	Date Answered	Cost Impact	Proceed

and discuss these after the Contractor's engineer has examined them.

T-0074 **301 Mission Wall - Nelson Stud and Stirrup Locations** **Closed** **04/01/2011** **04/11/2011** **04/01/2011** **Potentially** ☐

From: Webcor Construction LP David Hungerford **To:** Turner Construction Compan Daphne Faulkner **Answered By:** URS Corporation David Fyfe

Co-Author:

REQUEST:

Reference: RFI T-0027

Per field conversation, please confirm that it is acceptable to install/weld nelson studs at 9" on center at locations in front of the vault intrusions into the concrete stem wall, where the #8 size dowels are also spaced at 9" on center, per RFI T-0027. The Nelson Stud spacing will match dowel embeddment locations. This spacing also facilitates the installation of rebar stirrups and provides two tie points, one being the dowel, and the other the nelson stud.

This work is currently ongoing and immediate confirmation is requested. Please confirm this layout is acceptable.

SUGGESTION:

ANSWER: **Accept Suggestion:** ☐

Industry standard practice is to use miscellaneous added tie rebar (e.g. #3 or #4 bar) to provide for requirements to tie reinforcement bars as required. This RFI is a request to change spacing of nelson stud bars from 12" o.c. to 9" o.c. (where #8 dowels are spaced at 9" o.c.) in lieu of use of added tie bars.

We note this request is for convenience of the Contractor and on this basis take no exception to reducing the spacing of the nelson stud bars from 12" o.c. to 9" o.c. (where #8 dowels are spaced at 9" o.c.). Accordingly, no change in contract and/or extension in schedule will be provided to accommodate this Contractor request. All impacts including cost and schedule associated with reducing spacing of nelson stud bars shall be borne solely by the Contractor.

David Fyfe, 04/01/2011

No CR will be issued for work associated with the change in nelson stud spacing from 12" o.c. to 9" o.c. (where #8 dowels are spaced at 9" o.c.).

Kevin Chiu, 04/01/2011

T-0075 **BSE - Specification Section 32 12 17 and 32 12 18** **Closed** **04/04/2011** **04/14/2011** **04/05/2011** **Potentially** ☐

From: Webcor Construction LP Nhi Tran **To:** Turner Construction Compan Daphne Faulkner **Answered By:** Transbay PMPC Alfred Lau

Co-Author:

REQUEST:

SUGGESTION:

ANSWER: **Accept Suggestion:** ☐

Number	Subject	Status	Date Created	Date Required	Date Answered	Cost Impact	Proceed

We noticed that the Specification 32 12 17 at the bid has been revised to 32 12 18 in the IFC Document.
1. Please confirm that the content of the specification "STREET EXCAVATION AND RESTORATION" was unchanged between pre-bid and post-bid.
2. Please confirm that the Trade Subcontractor shall continue to use the Specification Number 32 12 18 and TJPA shall revise the Table of Contents and other specification sections referring to "32 12 17."

1. Confirmed. Street Excavation and Restoration specification was issued as 32 12 17 in the IFB set, and issued as 32 12 18 to avoid duplication with the Pavement Restoration specification for the Utilities trade packages.

2. Confirmed. As stated above, 32 12 17 is for Pavement Restoration section for the Utilities trade packages, and is not applicable for TG03 Work.

T-0076 **BSE - Footing and Pile Removal at Bent 59 - 61** **Closed** **04/04/2011** **04/14/2011** **04/11/2011** **Potentially** ☐

From: Webcor Construction LP Nhi Tran **To:** Turner Construction Compan Daphne Faulkner **Answered By:** Turner Construction Comp Jack Adams

Co-Author: Balfour Beatty Infrastructure, Inc. Ural Yal

REQUEST:

Reference Sheet D-1072, D-1030, D-1046, and D-5103 and Spec Section 01 35 65

Please advise the following as discussed with BBII on 03-28-2011 have been completed per the Demolition Contract:
- Bent 59-61 - Removal of columns, footings and timber piles as required to complete 4'x4' x13' excavation below grade complete and backfilled. (Refer to drawings D-1072, D-1030, D-1046).

SUGGESTION:

ANSWER: **Accept Suggestion:** ☐

Demolition of both Bent 59 and 61 was completed per Demolition Contract Drawing D-1046 Rev.0 Dated 01/04/10 and Drawing CL-17456 Rev.1 dated 8/10/09.

Bent footings were demolished to the minimum 3 feet below grade per drawing D-1046 and applicable notes. Locations of these Utility Pole Foundations were determined by SFMTA (MUNI) and BLHP (Street Lighting).

The three (3) locations total for the new Utility Pole Foundations had the bent footings removed and were excavated to a depth of 13' (+/-). Wood piles were not "pulled." Pile removal consisted of removing the top of pile as required to install the pole foundations to depth.

T-0077 **BSE - Monitoring Plans and Data for Zone 4 and Lot N** **Closed** **04/04/2011** **04/14/2011** **04/11/2011** **Potentially** ☐

From: Webcor Construction LP Nhi Tran **To:** Turner Construction Compan Daphne Faulkner **Answered By:** Turner Construction Comp Jack Adams

Co-Author: Balfour Beatty Infrastructure, Inc. Ural Yal

REQUEST:

Reference Specification Section 01 35 65

SUGGESTION:

ANSWER: **Accept Suggestion:** ☐

Project "110 - Existing Terminal Building & Ramps Project" in Constructware contains the following

Number	Subject	Status	Date Created	Date Required	Date Answered	Cost Impact	Proceed

As discussed at the site walk through meeting on 03-28-2011 with BBII, BBII requests a copy of the demolition contract monitoring plan and any data in relation to demolition contract mitigation monitoring of Lot N and Zone 4.

submittals with the monitoring data requested-

1. 011540-02.0 Pre-Construction Survey - 181 Fremont St
2. 011540-04.0 Pre-Construction Survey - 199 Fremont St

Note: 301 Mission did not provide the demo contactor access therefore data is not available for this property.

T-0078 **BSE - Timber Piles Not Yet Surveyed by EBI** **Closed** **04/04/2011** **04/14/2011** **04/12/2011** **Potentially** ☐

From: Webcor Construction LP Nhi Tran **To:** Turner Construction Compan Daphne Faulkner **Answered By:** Turner Construction Comp Jack Adams

Co-Author: Balfour Beatty Infrastructure, Inc. Ural Yal

REQUEST:

Reference attached photos and sketch

While BBII was excavating the trial pile extraction area and exposing the timber piles on 03/31/11, piles that were not surveyed by EBI were discovered on the eastern side of the TPE area close to pile 215053. Please advise on how to proceed.

SUGGESTION:

ANSWER: **Accept Suggestion:** ☐

Demolition Contractor exposed tops of wooden piles as part of demolition and was not required to survey wooden piles.

BBII should follow contract Spec 02-41-19 Pile Removal Para 1.4 and provide existing timber pile documentation.

Each pile over contract quantity will be reimbursed as force account (unless parties can agree on a unit rate) in accord with CCO no. T-001 Rev 2 dated 4/8/11.

T-0079 **BSE - Existing Street Light Footing Locations** **Closed** **04/04/2011** **04/14/2011** **04/11/2011** **Potentially** ☐

From: Webcor Construction LP Nhi Tran **To:** Turner Construction Compan Daphne Faulkner **Answered By:** Turner Construction Comp Jack Adams

Co-Author: Balfour Beatty Infrastructure, Inc. Ural Yal

REQUEST:

Reference Specification Section 02 41 01

As discussed at the site walk through meeting 03-28-2011 with BBII, the pre-existing street light poles were relocated per demo contract. BBII was told the foundations and timber piles for the pre-existing street lights have not been removed.

SUGGESTION:

ANSWER: **Accept Suggestion:** ☐

Spec 02-41-00 is the Spec for Demolition Contractor and Demolition Drawing D-1084 scopes the Lighting Removal and Replacement Plan.

All Pre-existing street lights scoped in the Demolition Contract Drawings were demolished and removed. There are no pre-existing lights, street light

Number	Subject	Status	Date Created	Date Required	Date Answered	Cost Impact	Proceed

Please provide BBII with as-built drawings indicating the pre-existing street light locations. Pre-existing streetlight foundations will need to be removed before CDSM wall installation, if a conflict is identified.

foundations or OCS pole foundations remaining installed that were contracted for demolition by Demolition Contractor.

The (3) three Light Poles and Light Pole Foundations located at Fremont St. per Demolition Drawing D-1084 are on "Portable Foundations" (versus poured concrete foundations).

The (3) three Light Poles and Light Pole Foundations located on First St. per Demolition Drawing D-1084 are on poured underground foundations anchored to basement floor.

This is less scope for BSE Contractor who will not have to disconnect and demolish pole foundations that were located in the Frmont St. excavations. Locations of these Portable Light Poles at Fremont and underground foundation Light/OCS Poles on First St. were determined by SFMTA (MUNI) and BLHP (Street Lighting).

T-0080 **BSE - Additional Timber Piles Not Surveyed by EBI** **Closed** **04/04/2011** **04/14/2011** **04/12/2011** **Potentially** ☐

From: Webcor Construction LP Nhi Tran **To:** Turner Construction Compan Daphne Faulkner **Answered By:** Turner Construction Comp Jack Adams

Co-Author: Balfour Beatty Infrastructure, Inc. Ural Yal

REQUEST:

Reference RFI#T-0078 and attached photos and sketch

While BBII was excavating the trial pile extraction area and exposing the timber piles on 04/01/2011, piles that were not surveyed by EBI were discovered on the southern side of the TPE area close to piles 215044, 215043 and in the centre of the TPE area at 215054, as shown in the attached drawing. The pile next to 215054 was extracted due to its proximity to 215054. A total of 7 additional piles have now been discovered to date. Please advise BBII on how to proceed.

SUGGESTION:

ANSWER: **Accept Suggestion:** ☐

BBII should follow contract Spec 02-41-19 Pile Removal Para 1.4 and provide existing timber pile documentation.

Each pile over contract quantity will be reimbursed as force account (unless parties can agree on a unit rate) in accord with CCO no. T-001 Rev 2 dated 4/8/11.

T-0081 **BSE - Revised Shoring Wall Alignment Dimension** **Closed** **04/05/2011** **04/15/2011** **04/11/2011** **Potentially** ☐

Number	Subject	Status	Date Created	Date Required	Date Answered	Cost Impact	Proceed

From: Webcor Construction LP Nhi Tran **To:** Turner Construction Compan Daphne Faulkner **Answered By:** Adamson Associates, Inc George Metzger

Co-Author: Balfour Beatty Infrastructure, Inc. Ural Yal

REQUEST:

Reference attached sheet SKGT-0001-R1

The dimension from gridline J to the intersection of wall segments 1-1 and X1-1 was not updated for the revised shoring wall alignment - see attached drawing for reference. Please provide the correct dimension.

SUGGESTION:

ANSWER: **Accept Suggestion:** ☐

ARUP Response:

The dimensions have been revised. See the attached SKGT-0001-R3.

T-0082 **BSE - Hazardous Material Removed From Site** **Closed** **04/05/2011** **04/15/2011** **04/11/2011** **Potentially** ☐

From: Webcor Construction LP Nhi Tran **To:** Turner Construction Compan Daphne Faulkner **Answered By:** Turner Construction Comp Jack Adams

Co-Author: Balfour Beatty Infrastructure, Inc. Ural Yal

REQUEST:

Reference Specification Section 00 03 35

Please confirm that all hazardous material has been removed from site per the extent of demolition contract drawings for Zone 4 and Lot N.

SUGGESTION:

ANSWER: **Accept Suggestion:** ☐

Above ground structures and foundations were demolished at Parcel N, including footings to minus 3 feet. Demolition contract Hazardous materials scope was completed including 133 Beale st. Bar and Grille.

Refer to Demolition Drawings D-1011, D-1012, D-1013, D-1029, D1030, D1044-1046 and D-1252 for extent of removal of structures and hazardous material.

T-0083 **BSE - Existing Utilities Decommissioning Lot N and Zone 4** **Closed** **04/05/2011** **04/15/2011** **04/13/2011** **Potentially** ☐

From: Webcor Construction LP Nhi Tran **To:** Turner Construction Compan Daphne Faulkner **Answered By:** Turner Construction Comp Jack Adams

Co-Author: Balfour Beatty Infrastructure, Inc. Ural Yal

REQUEST:

Reference Sheet D-2230 and Specification Section 02 41 01

Please provide as built drawings for all decommissioned utilities in Lot N and Zone 4 to BBII.

SUGGESTION:

ANSWER: **Accept Suggestion:** ☐

Parcel N: Exisiting Utilities were decommissioned (e.g. cut and cap) in accord with Contract Drawings which only is 133 Beale st. Bar and Grille per D-1252.

Parcel D Zone 4 : Exisiting Utilities were decommissioned (e.g. cut and cap) in accord with Contract Demolition Drawings D-1202, D-1203, D-1206, D-1207, D-1210, D-1215

However: Two (2) locations of Existing Combined Sewer Connections ("SEWER") shown on D-1202 and D-1206 were as left unplugged to assist BBII with

Number	Subject	Status	Date Created	Date Required	Date Answered	Cost Impact	Proceed

Dewatering discharge pipes. Locations are identified as follows: "3/D-1210 SEWER" on sheets D-1202, D-1206 and "-/- SEWER" on sheets D-1202, D-1206 (NE Corner of Lot D; no detail number provided).

Demolition Contractor has not completed their scope of Contract and therefore has not submiited their final as-built drawings in Constructware. However, they are available in Demolition Contractor's trailer office for your viewing.

T-0083.1 **BSE - Existing Utilities Decommissioning Lot N and Zone 4** **Closed** **04/05/2011** **04/15/2011** **05/24/2011** **Potentially** ☐

From: Webcor Construction LP Nhi Tran **To:** Turner Construction Compan Daphne Faulkner **Answered By:** Turner Construction Comp Jack Adams

Co-Author: Balfour Beatty Infrastructure, Inc. Ural Yal

REQUEST:

Reference Response to RFI#T-0083, Sheet D-2230 and Specification Section 02 41 01

The following response of RFI T-0083 is not acceptable and will become out of control of the RFI documentation process: "they are available in Demolition Contractor's trailer office for your viewing."

Please provide BBI with as built drawings for all utilities which has been decommissioned to date in Lot N and Zone 4 to BBII.

SUGGESTION:

ANSWER: **Accept Suggestion:** ☐

Demolition Contractor has no Utility Demolition scope at Parcel N.

Demolition Contractor has completed Utility Demolition scope at Parcel D (Zone 4) per contract drawings except where agreed by BBIi.

These as-built Utility Demolition Drawings are currently under review by the Engineer of Record and will be issued to Webcor/Obayashi for their use after this review is complete.

T-0084 **BSE - Existing Storm Drains Decommissioning in Lot N** **Closed** **04/05/2011** **04/15/2011** **04/11/2011** **Potentially** ☐

From: Webcor Construction LP Nhi Tran **To:** Turner Construction Compan Daphne Faulkner **Answered By:** Turner Construction Comp Jack Adams

Co-Author: Balfour Beatty Infrastructure, Inc. Ural Yal

REQUEST:

Reference Sheet D-2230 and Specification Section 02 41 01

There are 2 existing storm drain basins in Lot N not yet decommissioned. Please provide BBII the status of

SUGGESTION:

ANSWER: **Accept Suggestion:** ☐

Parcel N: Existing Utilities were decommissioned (e.g. cut and cap) in accord with Contract Drawings which only is 133 Beale St. Bar and Grille per D-1252.

There are two Storm Drain outlets on parcel N and

Number	Subject	Status	Date Created	Date Required	Date Answered	Cost Impact	Proceed

decommissioning or modification of these lines.

their status' are unknown because they are outside the scope of the demolition contractor. Unforeseen Catch Basin at Beale Street Bar & Grill is identified under Demolition Contractor RFI -00058. These have been observed draining the water from parcel N during the rainy season.

T-0084.1 **BSE - Existing Storm Drains Decommissioning in Lot N** **Closed** **04/21/2011** **05/01/2011** **05/02/2011** **Potentially** ☐

From: Webcor Construction LP Nhi Tran **To:** Turner Construction Compan Daphne Faulkner **Answered By:** Turner Construction Comp Jack Adams

Co-Author: Balfour Beatty Infrastructure, Inc. Ural Yal

REQUEST:

Reference RFI#T-0084, Drawing Sheet D-2230, and Specification Section 02 41 01

RFI response T-0084 has not provided clear direction for decommissioning these SD lines. The drawings indicate that the SD drain flows towards Beale Street and will conflict with the CDSM wall. Please advise on status for decommissioning the above SD lines.

SUGGESTION:

ANSWER: **Accept Suggestion:** ☐

As stated in response to RFI T-0084 there are two Storm Drain outlets on Parcel N and their status' are unknown because they are outside the scope of the demolition contractor. Unforeseen Catch Basin at Beale Street Bar & Grill is identified under Demolition Contractor RFI -00058.

This is outside the scope of the Demolition and the BSE contract. Webcor-Obayashi RUP relocation of Utilities Project Manager will be contacted for reroute or decommissioning these Parcel N parking lot storm drain lines.

T-0085 **BSE - Existing Site Conditions Lot N** **Closed** **04/05/2011** **04/15/2011** **04/11/2011** **Potentially** ☐

From: Webcor Construction LP Nhi Tran **To:** Turner Construction Compan Daphne Faulkner **Answered By:** Turner Construction Comp Jack Adams

Co-Author: Balfour Beatty Infrastructure, Inc. Ural Yal

REQUEST:

Reference Specification Section 01 15 40

Prior to demolition work Lot N surface consisted of asphalt paving, however a majority of the Lot is not currently paved. BBII assumes that the lot will be restored to its original condition. Please confirm

SUGGESTION:

ANSWER: **Accept Suggestion:** ☐

Demolition Contractor was not required to restore areas specified for demolition with asphalt paving (areas such as Parcel N). This was not specified for in the demolition Contract drawings or Spec. The demolition contractor is required to backfill after removal of below grade structures with recycled crushed/processed demolition concrete. For Parcel N - Refer to drawing D-1029 Note 9.

Webcor/Obayashi Joint Venture

PROJECT MANAGEMENT - REQUEST AND ANSWERS LOG

30100 - Transbay Transit Center Project

Number	Subject	Status	Date Created	Date Required	Date Answered	Cost Impact	Proceed
T-0086	**BSE - Clean Debris From Adjacent Buildings To Lot N and Zone 4**	**Closed**	**04/05/2011**	**04/15/2011**	**04/11/2011**	**Potentially**	☐

From: Webcor Construction LP Nhi Tran **To:** Turner Construction Compan Daphne Faulkner **Answered By:** Turner Construction Comp Jack Adams

Co-Author: Balfour Beatty Infrastructure, Inc. Ural Yal

REQUEST:

Reference Specification Section 01 15 40

Please confirm that demolition contractor has satisfied the requirement to clean all dust and debris generated by demolition contract to the satisfaction of the adjacent building owners, and BBII will only be responsible for cleaning dust and debris generated by BBII during its own operations, after the turnover of these are completed.

SUGGESTION:

ANSWER: **Accept Suggestion:** ☐

Confirmed. Demolition contractor has satisfied the requirement to clean all dust and debris generated by demolition contract to the satisfaction of the adjacent building owners to date. This was confirmed through conversation with both EBi and Singer Associates.

T-0087	**BSE - Zone 4 Gate**	**Closed**	**04/05/2011**	**04/15/2011**	**04/11/2011**	**Potentially**	☐

From: Webcor Construction LP Nhi Tran **To:** Turner Construction Compan Daphne Faulkner **Answered By:** Turner Construction Comp Jack Adams

Co-Author: Balfour Beatty Infrastructure, Inc. Ural Yal

REQUEST:

Reference Demo Contract Drawings

Per note 5 on drawing D-1006 of the demolition contract, each discreet fenced area shall have a minimum of two 16ft gates at the conclusion of demolition work. Currently, zone 4 only has one gate in place. BBII requests an additional gate be provided on the Fremont St. side of zone 4. BBII is available to meet and coordinate an ideal location.

SUGGESTION:

ANSWER: **Accept Suggestion:** ☐

Demolition Contractor second 16 foot gate eliminated due to Fremont Shoring wall. Demolition contractor used alternate means and methods for truck traffic to-from parcel D Zone 4.

That said, Demolition contractor has offered gate credit which could be used to install a 16 wide gate either at SW corner near 181 Fremont St. or on the Beale St. fence line. However- Demolition contractor would not be responsible for curb cut, removal of parking meters or other ancillary scope if Beale St. gate is chosen - that would be the responsibility of BSE Contractor. BBII can use/modify and relocate barrier fence and gates as needed per your contract. A field coordination meeting after the Monday 4/11/11 Street Coordination meeting is recommended.

T-0088	**BSE - Temporary Shoring Wall and Buttress Conflict**	**Closed**	**04/06/2011**	**04/16/2011**	**04/08/2011**	**Potentially**	☐

From: Webcor Construction LP Nhi Tran **To:** Turner Construction Compan Daphne Faulkner **Answered By:** Adamson Associates, Inc George Metzger

Co-Author: Balfour Beatty Infrastructure, Inc. Ural Yal

REQUEST:

Reference Sheet GT-2201 and Specification Section 31 63 29

SUGGESTION:

ANSWER: **Accept Suggestion:** ☐

ARUP Response:

This issue was discussed at yesterday's (4/6/11) BSE

Number	Subject	Status	Date Created	Date Required	Date Answered	Cost Impact	Proceed

The temporary shoring wall installed under the demolition contract was moved East away from Fremont St. to avoid an unknown existing concrete wall. The as-built alignment of the wall now falls along the edge of the third column (C) of buttress shafts. In an effort to avoid conflicts with column C shafts generated by the revised temporary shoring wall alignment, BBII suggests that the buttress formation be moved 12" East.

meeting. The information which will be included in the Contractor's drilled shaft work plan is needed by Arup to evaluate the feasibility of the proposed shift and to consider other options.

T-0088.1 **BSE - Temporary Shoring Wall and Buttress Conflict** **Closed** **04/06/2011** **04/16/2011** **04/20/2011** **Potentially** ☐

From: Webcor Construction LP Nhi Tran **To:** Turner Construction Compan Daphne Faulkner **Answered By:** Adamson Associates, Inc George Metzger

Co-Author: Balfour Beatty Infrastructure, Inc. Ural Yal

REQUEST:

The response for RFI #T-0088 was not an answer to the question
Please provide an appropriate direction to start preparing the submittal and the work as soon as possible.

Reference Sheet GT-2201 and Specification Section 31 63 29

The temporary shoring wall installed under the demolition contract was moved East away from Fremont St. to avoid an unknown existing concrete wall. The as-built alignment of the wall now falls along the edge of the third column (C) of buttress shafts. In an effort to avoid conflicts with column C shafts generated by the revised temporary shoring wall alignment, BBII suggests that the buttress formation be moved 12" East.

SUGGESTION:

ANSWER: **Accept Suggestion:** ☐

The contractor may relocate the entire buttress structure up to 12 inches east of the design location in order to clear any conflict with the Fremont Street shoring wall. Contractor is requested to identify the new layout and any impacts prior to start of buttress construction.

T-0088.2 **BSE - Temporary shoring wall and buttress conflict** **Closed** **04/06/2011** **04/27/2011** **04/25/2011** **Potentially** ☐

From: Webcor/Obayashi Joint Venture Nhi Tran **To:** Turner Construction Compan Daphne Faulkner **Answered By:** Adamson Associates, Inc George Metzger

Co-Author: Balfour Beatty Infrastructure, Inc. Ural Yal

REQUEST:

The response for RFI #T-0088.1 was not an acceptable

SUGGESTION:

ANSWER: **Accept Suggestion:** ☐

ARUP Response:

Number	Subject	Status	Date Created	Date Required	Date Answered	Cost Impact	Proceed

answer to the question.

Please provide exact revised layout as required.

The Buttresses have exact Coordinate Locations to define the layout, as shown on GT-2201.

The existing coordinates must be changed to reflect the new layout the TJPA desires.

History

Information from RFI#T-0088.1

The response for RFI #T-0088 was not an answer to the question
Please provide an appropriate direction to start preparing the submittal and the work as soon as possible.
Answered By: George Metzger
Answered On: 20-Apr-2011
Answer:
The contractor may relocate the entire buttress structure up to 12 inches east of the design location in order to clear any conflict with the Fremont Street shoring wall.
Contractor is requested to identify the new layout and any impacts prior to start of buttress construction.

Information from RFI#T-0088

Reference Sheet GT-2201 and Specification Section 31 63 29

The temporary shoring wall installed under the demolition contract was moved East away from Fremont St. to avoid an unknown existing concrete wall. The as-built alignment of the wall now falls along the edge of the third column (C) of buttress shafts. In an effort to avoid conflicts with column C shafts generated by the revised temporary shoring wall alignment, BBII suggests that the buttress formation be moved 12'' East.
Suggestion
Cost Impact Potentially Cost Amount
Schedule Impact Potentially Days

The Contractor's cover sheet describes this as RFI 0088.2, but the correct number is 0088.3.

See attached SKGT-0002.

Number	Subject	Status	Date Created	Date Required	Date Answered	Cost Impact	Proceed

Answered By George Metzger
Date Answered 2011-04-20
Answer The contractor may relocate the entire buttress structure up to 12 inches east of the design location in order to clear any conflict with the Fremont Street shoring wall. Contractor is requested to identify the new layout and any impacts prior to start of buttress construction.

T-0088.3	BSE - Temporary shoring wall and buttress conflict	Closed	04/06/2011	04/27/2011	04/25/2011	Potentially ☐

From: Webcor Construction LP Nhi Tran **To:** Turner Construction Compan Daphne Faulkner **Answered By:** Adamson Associates, Inc George Metzger

Co-Author: Balfour Beatty Infrastructure, Inc. Ural Yal

REQUEST:

The response for RFI #T-0088.1 was not an acceptable answer to the question.

Please provide exact revised layout as required.

The Buttresses have exact Coordinate Locations to define the layout, as shown on GT-2201.

The existing coordinates must be changed to reflect the new layout the TJPA desires.

History

Information from RFI#T-0088.1

The response for RFI #T-0088 was not an answer to the question
Please provide an appropriate direction to start preparing the submittal and the work as soon as possible.
Answered By: George Metzger
Answered On: 20-Apr-2011
Answer:
The contractor may relocate the entire buttress structure up to 12 inches east of the design location in order to clear any conflict with the Fremont Street shoring wall.
Contractor is requested to identify the new layout and any impacts prior to start of buttress construction.

SUGGESTION:

ANSWER: **Accept Suggestion:** ☐

ARUP Response:

The Contractor's cover sheet describes this as RFI 0088.2, but the correct number is 0088.3.

See attached SKGT-0002.

Number	Subject	Status	Date Created	Date Required	Date Answered	Cost Impact	Proceed

---

Information from RFI#T-0088

Reference Sheet GT-2201 and Specification Section 31 63 29

The temporary shoring wall installed under the demolition contract was moved East away from Fremont St. to avoid an unknown existing concrete wall. The as-built alignment of the wall now falls along the edge of the third column (C) of buttress shafts. In an effort to avoid conflicts with column C shafts generated by the revised temporary shoring wall alignment, BBII suggests that the buttress formation be moved 12" East.
Suggestion
Cost Impact Potentially Cost Amount
Schedule Impact Potentially Days
Answered By George Metzger
Date Answered 2011-04-20
Answer The contractor may relocate the entire buttress structure up to 12 inches east of the design location in order to clear any conflict with the Fremont Street shoring wall. Contractor is requested to identify the new layout and any impacts prior to start of buttress construction.

T-0089 **BSE - Existing Asphalt and Concrete Removed Zone 4** **Closed** **04/06/2011** **04/16/2011** **04/11/2011** **Potentially** ☐

From: Webcor Construction LP Nhi Tran **To:** Turner Construction Compan Daphne Faulkner **Answered By:** Turner Construction Comp Jack Adams

Co-Author: Balfour Beatty Infrastructure, Inc. Ural Yal

REQUEST:

Reference Sheet D-1001 and Demo Contract Dwgs D-1060, D-1072 and attached photos

Please see attached photos showing asphalt pavement at the entrance to zone 4 on the northeast corner. The referenced asphalt driveway is not in the BSE contract work and will need to be removed. Please advise.

SUGGESTION:

ANSWER: **Accept Suggestion:** ☐

The asphalt pavement at the entrance to zone 4 on the northeast corner is not in demolition contract scope. Contract scope included concrete columns, footings and mat slab to be removed as defined in contract drawings. Refer to demolition drawing D-1058 for best depiction of extent of demolition.

Refer also to D-1014, D-1030, D-1058, D-1060, D-1063 and D-1072

Webcor/Obayashi Joint Venture

PROJECT MANAGEMENT - REQUEST AND ANSWERS LOG

30100 - Transbay Transit Center Project

Number	Subject	Status	Date Created	Date Required	Date Answered	Cost Impact	Proceed
T-0090	**BSE - Timber Piles Not Surveyed By EBI 04/04/11**	**Closed**	**04/06/2011**	**04/16/2011**	**04/13/2011**	**Potentially**	☐

From: Webcor Construction LP — Nhi Tran
To: Turner Construction Compan — Daphne Faulkner
Answered By: Turner Construction Comp — Jack Adams
Co-Author: Balfour Beatty Infrastructure, Inc. — Ural Yal

REQUEST:

Reference attached photos and sketch

While BBII were excavating the trial pile extraction area and exposing the timber piles on 04/04/2011, piles that were not surveyed by EBI were discovered on the eastern side of the TPE area close to pile 215053 and in the western side of the TPE area at 215055 as shown in the attached drawing. The pile next to 215055 was extracted due to its proximity to 215055. A total of 10 additional piles have now been discovered to date. Please advise on how to proceed.

SUGGESTION:

ANSWER: **Accept Suggestion:** ☐

BBII should follow contract Spec 02-41-19 Pile Removal Para 1.4 and provide existing timber pile documentation.

Each pile over contract quantity will be reimbursed as force account (unless parties can agree on a unit rate) in accord with CCO no. T-001 Rev 2 dated 4/8/11.

T-0091	**Reciept of Construction Documents**	**Closed**	**04/06/2011**	**04/16/2011**	**04/08/2011**	**Potentially**	☐

From: Webcor Construction LP — David Hungerford
To: Turner Construction Compan — Daphne Faulkner
Answered By: Transbay PMPC — Alfred Lau
Co-Author:

REQUEST:

Per the 110325_MSTR_CD_Work_Plan schedule, transmitted to Webcor/Obayashi on March 28, 2011 and discussed in the OAC Meeting on April 6, 2011; confirm the following dates should be implemented in the next monthly schedule update:

1. Webcor/Obayashi will receive the 90% CD documents on August 24, 2011

2. Webcor/Obayashi will receive the 100% CD documents on December 2, 2011

SUGGESTION:

ANSWER: **Accept Suggestion:** ☐

Confirm. These are the current scheduled dates provided by the Design Team.

T-0092	**BSE - Timber Piles Not Surveyed By EBI 4/5/11**	**Closed**	**04/06/2011**	**04/16/2011**	**04/13/2011**	**Potentially**	☐

From: Webcor Construction LP — Nhi Tran
To: Turner Construction Compan — Daphne Faulkner
Answered By: Turner Construction Comp — Jack Adams
Co-Author: Balfour Beatty Infrastructure, Inc. — Ural Yal

REQUEST:

Reference attached photos and sketch

While BBII was excavating the trial pile extraction area and exposing the timber piles on 4/5/11, two further piles

SUGGESTION:

ANSWER: **Accept Suggestion:** ☐

BBII should follow contract Spec 02-41-19 Pile Removal Para 1.4 and provide existing timber pile documentation.

Number	Subject	Status	Date Created	Date Required	Date Answered	Cost Impact	Proceed

that were not surveyed by EBI were discovered on the southern side of the TPE area close to piles 215043 and 215044. Following this, four additional piles to the north west of the area adjacent to 215067 and 215068 as shown in the attached drawing were discovered. A total of 16 additional piles have now been discovered to date. Please advise on how to proceed.

Each pile over contract quantity will be reimbursed as force account (unless parties can agree on a unit rate) in accord with CCO no. T-001 Rev 2 dated 4/8/11.

T-0093 **BSE - CDSM Wall Segment 35-1 Spacing Confirmation** **Closed** **04/07/2011** **04/17/2011** **04/08/2011** **Potentially** ☐

From: Webcor Construction LP Nhi Tran **To:** Turner Construction Compan Daphne Faulkner **Answered By:** Adamson Associates, Inc George Metzger

Co-Author: Balfour Beatty Infrastructure, Inc. Ural Yal

REQUEST:

Reference Sheets GT-2103, GT-5101 and Specification Section 31 56 13

In drawing GT-5101, the spacing of all shoring wall beams is specified as 4'-0". This is reflected in the drawings for all sections of the CDSM shoring wall except the east wall (Wall Segment 35-1). The beam spacing of this Segment (measured in AutoCad) is 3.94728'. This creates a dimension bust of approximately 2.4' over the length of the wall and significant problems based on the auger spacing. Please verify the spacing of beams in Wall Segment 35-1.

SUGGESTION:

ANSWER: **Accept Suggestion:** ☐

ARUP Response:

The spacing of the soldier piles shall be the stated dimension in the documents (4'-0", unless otherwise noted). The Contractor is reminded to not scale the drawings. Additionaly, the AutoCad dwg files are not part of the contract documents and the Contractor is not to obtain dimensions off the electronic files.

T-0094 **BSE - Timber Piles Not Surveyed By EBI 04-06-11** **Closed** **04/08/2011** **04/18/2011** **04/13/2011** **Potentially** ☐

From: Webcor Construction LP Nhi Tran **To:** Turner Construction Compan Daphne Faulkner **Answered By:** Turner Construction Comp Jack Adams

Co-Author: Balfour Beatty Infrastructure, Inc. Ural Yal

REQUEST:

Reference attached photo and sketch

While BBII were excavating the trial pile extraction area and exposing the timber piles on 4/6/11, an additional pile was found close to 215068 as shown on the attached drawing and photos. A total of 17 additional piles have now been discovered to date. Please advise on how to proceed.

SUGGESTION:

ANSWER: **Accept Suggestion:** ☐

BBII should follow contract Spec 02-41-19 Pile Removal Para 1.4 and provide existing timber pile documentation.

Each pile over contract quantity will be reimbursed as force account (unless parties can agree on a unit rate) in accord with CCO no. T-001 Rev 2 dated 4/8/11.

Webcor/Obayashi Joint Venture

PROJECT MANAGEMENT - REQUEST AND ANSWERS LOG

30100 - Transbay Transit Center Project

Number	Subject	Status	Date Created	Date Required	Date Answered	Cost Impact	Proceed
T-0095	**BSE - Zone 1 CDSM Test Section Relocation**	**Closed**	**04/11/2011**	**04/21/2011**	**04/14/2011**	**Potentially**	☐

From: Webcor Construction LP — Nhi Tran
To: Turner Construction Compan — Daphne Faulkner
Answered By: Adamson Associates, Inc — George Metzger
Co-Author: Balfour Beatty Infrastructure, Inc. — Ural Yal

REQUEST:

Reference Sheet GT-2101, Specification Section 31 56 13 and attached drawing

Per discussion with ARUP at the Wednesday April 06, 2011 Design Coordination Meeting, the Engineer was willing to consider relocating the Zone 1 CDSM test panel as shown on Dwg. GT-2101 from Zone 1 and into Zone 2. BBII and DND Construction are therefore proposing to relocate the Zone 1 CDSM test panel to the location shown on the attached drawing, near gridline 10. Please confirm.

SUGGESTION:

ANSWER: **Accept Suggestion:** ☐

ARUP Response:
This is acceptable.

T-0096	**BSE - Old Existing Footing Along 301 Mission in Zone 4**	**Closed**	**04/11/2011**	**04/21/2011**	**04/12/2011**	**Potentially**	☐

From: Webcor Construction LP — Nhi Tran
To: Turner Construction Compan — Daphne Faulkner
Answered By: Turner Construction Comp — Jack Adams
Co-Author: Balfour Beatty Infrastructure, Inc. — Ural Yal

REQUEST:

Reference Specification Section 02 41 01

During Pre-Trench BBII found an existing footing along the Low Rise 301 Mission wall. The footing consists of bricks and concrete. It also has a perpendicular footing that come out from footing that is parallel to the 301 Mission building wall. BBII has exposed a 20 to 30ft section of this footing (approximately on Grid Line "A" between 30 and 32).

Please advise BBII as to how to proceed.

SUGGESTION:

ANSWER: **Accept Suggestion:** ☐

Per Contract Spec. 31-56-13 Shoring wall by CDSM Method Para 3.2 Pretrenching and removal of Obstructions, Contractor is to " remove any obstructions that might be encountered along the alignment of the walls. The depth and width of trench shall be that required to remove the obsructions from the path of the shoring wall."

The Archaeologist was contacted and viewed the exposed section of wall and brick debris on 4/11/11. Further archeological investigation will folllow as pre-trenching continues and areas are exposed - Ref: Spec. 00-08-12 for Archaeological conditions in Zone 4.

Demolition of underground obstructions shall be per Spec 02-41-01 and Demolition Debris shall be handled in accord with Spec. 01-74-00.

T-0096.1	**BSE - Old Existing Footing Along 301 Mission in Zone 4**	**Closed**	**04/20/2011**	**04/30/2011**	**05/02/2011**	**Potentially**	☐

From: Webcor Construction LP — Nhi Tran
To: Turner Construction Compan — Daphne Faulkner
Answered By: Turner Construction Comp — Jack Adams
Co-Author: Balfour Beatty Infrastructure, Inc. — Ural Yal

Number	Subject	Status	Date Created	Date Required	Date Answered	Cost Impact	Proceed

REQUEST:

Reference response to RFI T-0096 and Specification Section 02 41 01

BBII interprets the Response to RFI T-0096 (BBI 0067) as TJPA's approval for the removal of this unforeseen structure. Please confirm.

BBII proposes to follow the method outlined below for the removal of this unforeseen structure. Please confirm in writing that the removal of this unforeseen structure is approved and that provided that it is performed with the method outlined below, no damage to adjacent buildings will occur.

Pre Trench Obstruction Removal Method

Location:
Parallel along the 301 Mission St. Low Rise (Grid line A, approximately between lines 29 & 34).

Obstructions:
The footing consists of bricks and concrete. It also has a perpendicular footing that comes out from the footing that is parallel to the 301 Mission building wall.

Method:
BBII will first expose the obstructions and use an excavator mounted and hand held jackhammer to demolish the large masses into smaller more manageable sizes. An excavator with a bucket will then clear the debris, until the debris is removed from the area of the CDSM Wall location. BBII will chase the obstruction as deep as it goes in order to remove all debris necessary for a clean location to construct the CDSM Wall. Due to the unknown depth of the obstruction, at BBII discretion Sheet Piles or trench boxes may be used to support trench walls. All OSHA approved, safe practices will be used by BBII employees during the Demolition.

Additional Details:
As noted in the RFI response, the Archeologist has already examined the site. BBII (W/O) will notify the TJPA if additional structures or items are encountered.

SUGGESTION:

ANSWER: **Accept Suggestion:** ☐

Construction means and methods are the contractor's responsibility exclusively. RFI response are not authorization of any change in contract sum or contract time.

We take no exception to above method for the removal of structure. This work will be tracked in accord with CR T-0010.

Webcor/Obayashi Joint Venture

PROJECT MANAGEMENT - REQUEST AND ANSWERS LOG

30100 - Transbay Transit Center Project

Number	Subject	Status	Date Created	Date Required	Date Answered	Cost Impact	Proceed
T-0097	**BSE - Protective Material Along 301 Mission St Wall**	**Closed**	**04/20/2011**	**04/30/2011**	**05/06/2011**	**Potentially**	☐

From: Webcor Construction LP Nhi Tran **To:** Turner Construction Compan Daphne Faulkner **Answered By:** Turner Construction Comp Daphne Faulkner

Co-Author: Balfour Beatty Infrastructure, Inc. Ural Yal

REQUEST:

Reference attached photos

BBII has encountered a drainage material along the 301 Mission wall while pretrenching. During pretrenching, this drainage material has been removed because it was not affixed to the structure. The wall does not have any exterior waterproofing system.

Upon installation of the CDSM shoring system, the cementious material will be against this wall. The existing wall is a 5' deep cantilevered beam on the backside of the existing garage shaft for 301 Mission. Does TJPA plan to install any waterproofing along this wall that can tolerate the installation of a CDSM shoring system?

Please advise BBII of the TJPA's plan for waterproofing of this building.

SUGGESTION:

ANSWER: **Accept Suggestion:** ☐

Drainage material encountered is to be removed from the 301 Mission Wall as it was a temporary measure installed at the time of 301 Mission building construction. No waterproofing is required at this location. See attached email response from R. Rothenburger at PMPC.

04/19/2011 - George Metzger

TJPA to provide direction to GC.

T-0098	**301 Mission Wall - Tube Steel Alignment**	**Closed**	**04/12/2011**	**04/22/2011**	**04/21/2011**	**Potentially**	☐

From: Webcor Construction LP David Hungerford **To:** Turner Construction Compan Daphne Faulkner **Answered By:** Transbay PMPC Alfred Lau

Co-Author:

REQUEST:

Reference: B/S-5000 and D/A-6000

Detail B on sheet S-5000 shows the 10" tube steel centered on the 14" concrete wall below, however this is in conflict with D/A-6000 which shows the steel tube off set from the center of the wall. Please confirm per the 301 Mission subcontractor meeting conversation yesterday, that the tube steel is to be centered on the center of the wall as dimensioned in B/S-5000.

SUGGESTION:

ANSWER: **Accept Suggestion:** ☐

"Confirmed. The 10"x10"x5/8" HSS section shall be erected on the center line of the concrete wall as dimensioned in Section B on S-5000."

T-0099	**BSE - Depth of Fremont Street Shoring Wall in Zone 4**	**Closed**	**04/12/2011**	**04/22/2011**	**04/14/2011**	**Potentially**	☐

From: Webcor Construction LP Nhi Tran **To:** Turner Construction Compan Daphne Faulkner **Answered By:** URS Corporation David Fyfe

Co-Author: Balfour Beatty Infrastructure, Inc. Ural Yal

REQUEST:

Reference Sheet D-2203 and attached as-built, photos,

SUGGESTION:

ANSWER: **Accept Suggestion:** ☐

The temporary Fremont St. shoring wall was

Number	Subject	Status	Date Created	Date Required	Date Answered	Cost Impact	Proceed

and document
CPM Activity Impacted - SX-BB42640

While excavating adjacent to the existing Fremont street shoring wall as shown on contract drawing D-2203, BBII has found the existing shoring wall's height to be approximately 2' shorter than the 14 feet depth indicated in the as-builts (attached). This wall does not provide adequate shoring height for BBII to excavate and expose the timber piles prior to extraction. (See attached photo for illustration)

The contract documents D-2203 and pre-bid Q&A response #182 (also attached) indicate this wall would accommodate the buttress area pile removal, however actual existing field conditions do not provide adequate shored depth

Please provide direction.

constructed to support Fremont St. and facilitate removal of Terminal basement slab, walls, and pile caps/footings. The temporary Fremont St. shoring wall was not intended nor constructed to facilitate pile removal activities.
BSE sheet D-2203 only specifies removal of the temporary Fremont St. shoring wall. Sheet D-2203 does not specify nor imply that the temporary Fremont St. shoring wall shall be used or is sufficient to be used for pile removal activities.
Response to QBD 182 was provided to bidders to enable bidders to form a basis for pricing removal of the temporary Fremont St. shoring wall.
If the Contractor is undertaking excavation activities which jeopardize the stability of the Fremont St. roadway/foundation, then Contractor shall take any and all necessary actions to protect Fremont St. roadway/foundation.

T-0100 **BSE - Slurry Wall Along 301 Mission St Garage** **Closed** **04/13/2011** **04/23/2011** **04/18/2011** **Potentially** ☐

From: Webcor Construction LP Nhi Tran **To:** Turner Construction Compan Daphne Faulkner **Answered By:** Turner Construction Comp Jack Adams

Co-Author: Balfour Beatty Infrastructure, Inc. Ural Yal

REQUEST:

Reference RFI#T-0096, Specification Section 02 41 00, and attached photos

Please reference from RFI#T-0096 (BBI RFI #67): "During Pre Trench BBII found an existing footing along the Low Rise 301 Mission wall. The footing consists of bricks and concrete. It also has a perpendicular footing that come out from footing that is parallel to the 301 Mission building wall. We have exposed a 20 to 30ft section of this footing (Approximately on Grid Line "A" between 30 and 32)."

After the Concrete and Brick Footing was discovered, a very large mass of slurry was discovered in the same area, and continues where the RFI#T-0096 (BBI RFI# 67) Concrete Footing" stopped. ***Please See Attached Photos***

SUGGESTION:

ANSWER: **Accept Suggestion:** ☐

Per Contract Spec. 31-56-13 Shoring wall by CDSM Method Para 3.2 Pretrenching and removal of Obstructions, Contractor is to " remove any obstructions that might be encountered along the alignment of the walls. The depth and width of trench shall be that required to remove the obsructions from the path of the shoring wall."

The Archaeologist was contacted and viewed the exposed section of wall and brick debris on 4/11/11. Further archeological investigation will folllow as pre-trenching continues and areas are exposed - Ref: Spec. 00-08-12 for Archaeological conditions in Zone 4.

Demolition of underground obstructions shall be per

Number	Subject	Status	Date Created	Date Required	Date Answered	Cost Impact	Proceed

This slurry wall seems to continue into the future location of the Pre-Trench, and was not in the contract drawings.

Please Advise BBII as to how to proceed.

Spec 02-41-01 and Demolition Debris shall be handled in accord with Spec. 01-74-00.

T-0100.1 **BSE - Slurry Wall Along 301 Mission St Garage** **Closed** **04/20/2011** **04/30/2011** **05/02/2011** **Potentially** ☐

From: Webcor Construction LP Nhi Tran **To:** Turner Construction Compan Daphne Faulkner **Answered By:** Turner Construction Comp Jack Adams

Co-Author: Balfour Beatty Infrastructure, Inc. Ural Yal

REQUEST:

Reference response to RFI T-0100 and Specification Section 02 41 01

BBII interprets the Response to RFI#T-0100 (BBI 0070) as TJPA's approval for the removal of this unforeseen structure. Please confirm.

BBII proposes to follow the method outlined below for the removal of this unforeseen structure. Please confirm in writing that the removal of this unforeseen structure is approved and that provided that it is performed with the method outlined below, no damage to adjacent buildings will occur.

Pre Trench Obstruction Removal Method

Location:
Parallel along the 301 Mission St. Low Rise (Grid line A, approximately between lines 30 & 34).

Obstructions:
A very large mass of slurry.

Method:
BBII will first expose the obstructions and use an excavator mounted and hand held jackhammer to demolish the large masses into smaller more manageable sizes. An excavator with a bucket will then clear the debris, until the debris is removed from the area of the CDSM Wall location. BBII will chase the obstruction as deep as it goes in order to remove all debris necessary for

SUGGESTION:

ANSWER: **Accept Suggestion:** ☐

Construction means and methods are the contractor's responsibility exclusively. RFI response are not authorization of any change in contract sum or contract time.

We take no exception to above method for the removal of structure. This work will be tracked in accord with CR T-0010.

Number	Subject	Status	Date Created	Date Required	Date Answered	Cost Impact	Proceed

a clean location to construct the CDSM Wall. Due to the unknown depth of the obstruction, at BBII discretion Sheet Piles or trench boxes may be used to support trench walls. All OSHA approved, safe practices will be used by BBII employees during the Demolition.

Additional Details:
As noted in the RFI response, the Archeologist has already examined the site. BBII (W/O) will notify the TJPA if additional structures or items are encountered.

T-0101 **BSE - Pile Extraction Procedure Modification** **Closed** **04/14/2011** **04/24/2011** **04/15/2011** **Potentially** ☐

From: Webcor Construction LP Masashi Kojima **To:** Turner Construction Compan Daphne Faulkner **Answered By:** Adamson Associates, Inc George Metzger

Co-Author: Balfour Beatty Infrastructure, Inc. Ural Yal

REQUEST:

Reference Specification Section 02 41 19 and attached response for TG0300-310 Production Extraction Plan

BBII proposes to eliminate the "stroking" of the steel casing right before the CLSM is placed.
Upon removal of the steel casing, BBII proposes to "stroke" the steel casing after the CLSM is placed.
BBII believes the same effect of filling the void will be achieved, and this procedure will help to expedite the Project schedule.
Please kindly review our proposal. Your prompt response is appreciated.

SUGGESTION:

ANSWER: **Accept Suggestion:** ☐

ARUP Response:
This is not acceptable. The proposed procedure does not allow the volume of placed CLSM to be measured after the stroking of the casing.

T-0102 **BSE - Confirm Project Coordinates** **Closed** **04/15/2011** **04/25/2011** **04/19/2011** **Potentially** ☐

From: Webcor Construction LP Masashi Kojima **To:** Turner Construction Compan Daphne Faulkner **Answered By:** Adamson Associates, Inc George Metzger

Co-Author: Balfour Beatty Infrastructure, Inc. Ural Yal

REQUEST:

Reference Drawings U-0100 and GT-0100

BBII's surveyor, KCA Engineers, has noticed some slight variations in bearings between the Utility drawings and the BSE drawings. Please see the following of KCA's

SUGGESTION:

ANSWER: **Accept Suggestion:** ☐

ARUP Response: The Building Grid and bearing has been established to best-fit the numerous constraints on the project. It is coincidental that the street control lines (note, these are not necessarily in the center of the Right-of-Way and should not be construed as

observations and confirm coordinates provided on drawing GT-0100.

Drawings U-0100 has coordinates along the center lines of various streets. The result of those coordinates put a bearing on the center line of Mission Street and Minna Street at North 46° 18 ' 19.6" East and the center line of First Street at North 43° 41 ' 39.0" West. This results in those streets not being at right angles to each other.

Drawings GT-0100 has coordinates on Column Line E. The result of those coordinates puts a bearing of North 46° 18' 09.7" East on the terminal Tills is 00° 00' 10" off from being parallel with Mission and Minna Streets.
Is this correct or should Column Line E be parallel with Mission and Minna Streets?

The numerical column lines are shown at right angles to Column Line E, which gives them a bearing of North 43° 41 ' 50.3" West. It was observed that Column Line 18 appeared to be in almost the same location as the center line of First Street, but First Street has a bearing of North 43° 41 ' 39.0" West which is 00° 00' 11" different than Column Line 18. Is it just a coincidence that the center line and column line are almost exactly in the same location or should something be adjusted to make the two lines identical?

Please advise if the bearings of the terminal should remain or be changed.

Center Lines) are very close, but at slightly different bearings. The building elements are constructed based on the building grid, whereas the utilities and subsequent street level improvements will be constructed based on the street control lines. The Numerical Bearings of the North South Grid lines appear to be correct. A follow-up survey control meeting should take place to ensure the shoring wall layout is performed as intended.

Number	Subject	Status	Date Created	Date Required	Date Answered	Cost Impact	Proceed
T-0103	**BSE - Existing Concrete Footing Gridline J between Gridline 26.5-30**	**Closed**	**04/15/2011**	**04/25/2011**	**04/25/2011**	**Potentially**	☐

From: Webcor Construction LP — Masashi Kojima
Co-Author: Balfour Beatty Infrastructure, Inc. — Ural Yal
To: Turner Construction Compan — Daphne Faulkner
Answered By: Turner Construction Comp — Jack Adams

REQUEST:

Reference Drawings D-5103, D-2203 and GT-5104

Please see attached photos showing an unknown concrete structure discovered on the south side of zone 4. This structure is located between gridline 26.5-30 along gridline J. BBII is not aware of the purpose for this

SUGGESTION:

ANSWER: **Accept Suggestion:** ☐

Per Contract Spec. 31-56-13 Shoring wall by CDSM Method Para 3.2 Pretrenching and removal of Obstructions, Contractor is to " remove any obstructions that might be encountered along the alignment of the walls. The depth and width of trench shall be that required to remove the obstructions from

Number	Subject	Status	Date Created	Date Required	Date Answered	Cost Impact	Proceed

structure, or if it has any affect on the stability of the adjacent structures (177/181 Fremont street).

The unknown structure was not present in the BSE contract drawings and is in direct conflict with the CDSM wall alignment, Please advise BBII how to proceed.

the path of the shoring wall."

The Archaeologist was contacted and viewed the exposed section of wall and brick debris on 4/11/11. Further archeological investigation will follow as pretrenching continues and areas are exposed - Ref: Spec. 00-08-12 for Archaeological conditions in Zone 4.

Demolition of underground obstructions shall be per Spec 02-41-01 and Demolition Debris shall be handled in accord with Spec. 01-74-00.

T-0103.1 **BSE - Existing Concrete Footing Gridline J Between Gridline 26.5-30** **Closed** **04/27/2011** **05/07/2011** **05/02/2011** **Potentially** ☐

From: Webcor Construction LP Nhi Tran **To:** Turner Construction Compan Daphne Faulkner **Answered By:** Turner Construction Comp Jack Adams

Co-Author: Balfour Beatty Infrastructure, Inc. Ural Yal

REQUEST:

Reference RFI#T-0103 and Specification Section 02 41 01

BBII interprets the Response to RFI T-0103 (BBI 0074) as TJPA's approval for the removal of this unforeseen structure. Please confirm.

BBII proposes to follow the method outlined below for the removal of this unforeseen structure. Please confirm in writing that the removal of this unforeseen structure is approved and that provided that it is performed with the method outlined below, no damage to adjacent buildings will occur.

Pre Trench Obstruction Removal Method

Location:
Parallel along the 177/181 Fremont Street (Grid line J, approximately between lines 26.5-30).

Obstructions:
A large concrete structure.

Method:
BBII will first expose the obstructions and use an

SUGGESTION:

ANSWER: **Accept Suggestion:** ☐

Construction means and methods are the contractor's responsibility exclusively. RFI response are not authorization of any change in contract sum or contract time.

We take no exception to above method for the removal of structure. This work will be tracked in accord with CR T-0010.

Number	Subject	Status	Date Created	Date Required	Date Answered	Cost Impact	Proceed

excavator mounted and hand held jackhammer to demolish the large masses into smaller more manageable sizes. An excavator with a bucket will then clear the debris, until the debris is removed from the area of the CDSM Wall location. BBII will chase the obstruction as deep as it goes in order to remove all debris necessary for a clean location to construct the CDSM Wall. Due to the unknown depth of the obstruction, at BBII discretion Sheet Piles or trench boxes may be used to support trench walls. All OSHA approved, safe practices will be used by BBII employees during the Demolition.

Additional Details:
As noted in the RFI response, the Archeologist has already examined the site. BBII (W/O) will notify the TJPA if additional structures or items are encountered.

T-0104 **BSE - Request for Report (PSI for Caltrans)** **Closed** **04/18/2011** **04/28/2011** **04/18/2011** **Potentially** ☐

From: Webcor Construction LP Masashi Kojima **To:** Turner Construction Compan Daphne Faulkner **Answered By:** Transbay PMPC Alfred Lau

Co-Author: Balfour Beatty Infrastructure, Inc. Ural Yal

REQUEST:

Reference Specification 01 13 50 and 00 03 35

The Site Mitigation Plan in Spec section 01 13 50 of Volume 1, References the report "PSI for Caltrans, 1999." After looking through the contract documents for the Analytical back-up, BBII, Treadwell & Rollo, and Republic Services, have not been able to find it. It is necessary to have this information to properly dispose of the Hazardous Materials.
To Complete the Profile of the work site, the Disposal facility, Republic Services, BBII need the Lab Data/Analytical Data from the report.
At this time, the lack of information is halting the process of Material Off-Haul.
Please Advise, or supply the Needed Report Information.

SUGGESTION:

ANSWER: **Accept Suggestion:** ☐

Caltrans' Site Investigation Report for SFOBB West Approach, prepared by PSI in 1999 can be assessed from Constructware or from ftp site as below:

ftp://ftp.tjpa.org/Document%20Control/1104168/

Log In Instructions

1. Enter case-sensitive Username (public) and Password (PublicFTP1)

2. Select View\Open FTP Site in Windows Explorer

3. Drag file(s) to your desktop

Please contact PMPC Document Control should there is problem of accessing the information.

Webcor/Obayashi Joint Venture

PROJECT MANAGEMENT - REQUEST AND ANSWERS LOG

30100 - Transbay Transit Center Project

Number	Subject	Status	Date Created	Date Required	Date Answered	Cost Impact	Proceed
T-0105	**BSE - Train Box Beam Sizes**	**Closed**	**04/20/2011**	**05/02/2011**	**04/22/2011**	**Potentially**	☐

From: Webcor Construction LP Nhi Tran **To:** Turner Construction Compan Daphne Faulkner **Answered By:** Adamson Associates, Inc George Metzger

Co-Author: Balfour Beatty Infrastructure, Inc. Ural Yal

REQUEST:

Reference attached sketches and Sheet S1-3201

Drawing S1-3201 provides information on beam sizing in the permanent concrete structure. BBII was recently provided additional structure sections in response to T-0035.1, and a number of the beams appear to have changed in size. Beams at gridlines 18, 26, 34, & 35 should be 5' wide according to schedule A on drawing S1-3201. However, from the section provided at gridline A, these all appear to be sized at 7' wide. The sizes of these beams are critical in determining the final geometry and location of our temporary bridges. BBII acknowledges that the structural drawings are not to be scaled, so please advise if these beams are to be 60" wide as indicated in schedule A, or if they have increased in size to 84" wide.

SUGGESTION:

ANSWER: **Accept Suggestion:** ☐

Thornton Tomasetti Reply:

The concrete beams at gridlines 18, 26, 34, & 35 at Ground Level have increased to 84" wide. The design is "in-progress".

T-0106	**301 Mission Wall - Connection from Metal Stud to Tube Steel**	**Closed**	**04/20/2011**	**04/30/2011**	**04/27/2011**	**Potentially**	☐

From: Webcor Construction LP David Hungerford **To:** Turner Construction Compan Daphne Faulkner **Answered By:** URS Corporation David Fyfe

Co-Author:

REQUEST:

Reference: E & C/S-5000

Please see E & C/S-5000. Transworld has attempted in their shop to set #10 SMS through the structural tube steel, as per plan. The attempt was unsuccessful, therefore Transworld tried the use of a Hilti X-U fastener into the structural steel. Attached are Hilti spec sheets for the X-U Universal Knurled Shank Fastener as well as a photo showing the X-U fastener through the structural steel. Welding is another option for connection to the tube steel. Please advise how Transworld is to fasten the metal stud to the structural tube steel.

SUGGESTION:

ANSWER: **Accept Suggestion:** ☐

The proposed Hilti X-U fasteners are for interior use only and are not acceptable for use on the 301 Mission exterior screen wall. Welding will damage the structural steel paint and light gauge steel galvanized coating and is not an acceptable means of connection.

To fasten metal stud to structural tube steel contractor may: 1) Use shot pins rated for exterior use (i.e. Hilti X-CR fastener - ESR 1663); or 2) Pre-drill holes and tap stainless steel machine screws.

T-0107	**BSE - Visual Test in Lieu of Formally Testing for Verticality in CSL Tubes**	**Closed**	**04/20/2011**	**04/30/2011**	**04/22/2011**	**Potentially**	☐

From: Webcor Construction LP Nhi Tran **To:** Turner Construction Compan Daphne Faulkner **Answered By:** Adamson Associates, Inc George Metzger

Co-Author: Balfour Beatty Infrastructure, Inc. Ural Yal

REQUEST:

SUGGESTION:

ANSWER: **Accept Suggestion:** ☐

Number	Subject	Status	Date Created	Date Required	Date Answered	Cost Impact	Proceed

Reference RFI#T-0057, Sheet GT-5202, Specification Section 31 63 29, and attached documents
CPM Activity Impacted - Buttress Wall

Below are three cases (A, B, and C) in which formally testing for verticality on CSL tubes, BBII argues would prove to be highly unusual and counter-productive:

A. Specification Section 31.63.29.I.3 states "The contractor shall perform a test to determine verticality of the steel tubes, or drilled holes, that are going to be used for the sonic tests." Balfour Beatty has been advised by a number of testing firms that verticality tests cannot be performed on steel access tubes as well as piles reinforced with steel. Magnetic interference from steel reinforcement and steel tubes will cause the instrument to not function properly. BBII has also been advised by Terracon (please see attached email from Dextra), a reputable CSL testing firm that there are currently no known cases in the US where verticality of CSL tubes in steel reinforced piles have been formally tested.

B. Attached is a case study that details the investigation of debonding that occurs when using PVC as CSL access tubes. The results of this study clearly show the use of steel tubes (BBII is proposing to use Sonitec tubes) should be preferred over PVC.

C. After doing some research, the closest we came to find any mention of verticality in CSL tubes was this excerpt from EPA's website which states, "If the CSL access tubes are not installed in a near-vertical position and/or the distance between them varies significantly along the length of the shaft, errors in velocity calculations may occur." Judging by this approach to verticality in CSL tubes in most specs, BBII concludes that parallelism and symmetry between tubes are more important factors in ensuring accurate CSL test readings.

In summary, BBII in lieu of formally testing the CSL tubes for verticality will perform a visual test making sure that the tubes are symmetrical (equally spaced) in a circle and parallel. This is the most important inspection to ensure accurate pulse readings.

ARUP Response:

This is acceptable.

Number	Subject	Status	Date Created	Date Required	Date Answered	Cost Impact	Proceed

Please confirm that this is acceptable.

T-0108 **BSE - Building Adjacent Zone 3 Clean From Dust and Debris Generated By Demoli** **Closed** **04/20/2011** **04/30/2011** **04/29/2011** **Potentially** ☐

From: Webcor Construction LP Nhi Tran **To:** Turner Construction Compan Daphne Faulkner **Answered By:** Turner Construction Comp Jack Adams

Co-Author: Balfour Beatty Infrastructure, Inc. Ural Yal

REQUEST:

Reference Specification Section 01 15 40

Please confirm that the demolition contractor has satisfied the requirement to clean all dust and debris generated by demolition contract to the satisfaction of the adjacent building owners, and BBII will only be responsible for cleaning dust and debris generated by BBII during its own operations, after the turnover of these are completed.

SUGGESTION:

ANSWER: **Accept Suggestion:** ☐

Confirmed. Demolition contractor has satisfied the requirement to clean all dust and debris generated by demolition contract to the satisfaction of the adjacent building owners to date. This was confirmed through conversation with both EBi and Singer Associates.

T-0108.1 **BSE - Building Adjacent Zone 3 Clean From Dust and Debris Generated By Demoli** **Closed** **05/04/2011** **05/14/2011** **05/18/2011** **Potentially** ☐

From: Webcor Construction LP Nhi Tran **To:** Turner Construction Compan Daphne Faulkner **Answered By:** Turner Construction Comp Jack Adams

Co-Author:

REQUEST:

Reference response to RFI#T-0108 and Specification Section 01 15 40

W/O requests information on the measures used to clean the adjacent structures

---
RFI#T-0108 - BSE - Building Adjacent Zone 3 Clean From Dust and Debris Generated By Demolition Work

Question -
Reference Specification Section 01 15 40
Please confirm that the demolition contractor has satisfied the requirement to clean all dust and debris generated by demolition contract to the satisfaction of the adjacent building owners, and BBII will only be responsible for cleaning

SUGGESTION:

ANSWER: **Accept Suggestion:** ☐

Demolition Contractor ceased dust generating activities and turned over Zone 3 for BBIi use on 4-13-11.

BBIi did occupy the site and did commence work activities, and is responsible for dust control in accord with Mitigation and Monitoring Specifications from 4-13-11 until completion of BBii work activities.

BBII is only responsible for cleaning dust and debris generated from Zone 3 during BBII operations from 4-13-11 going forward.

Number	Subject	Status	Date Created	Date Required	Date Answered	Cost Impact	Proceed

dust and debris generated by BBII during its own operations, after the turnover of these are completed.

Response -
Confirmed. Demolition contractor has satisfied the requirement to clean all dust and debris generated by demolition
contract to the satisfaction of the adjacent building owners to date. This was confirmed through conversation with both
EBi and Singer Associates.

T-0108.2 **BSE - Building Adjacent Zone 3 Clean From Dust and Debris Generated By Demoli** **Closed** **05/04/2011** **05/14/2011** **05/27/2011** **Potentially** ☐

From: Webcor Construction LP Nhi Tran **To:** Turner Construction Compan Daphne Faulkner **Answered By:** Turner Construction Comp Jack Adams

Co-Author:

REQUEST:

Reference response to RFI#T-0108, RFI#T-0108.1 and Specification Section 01 15 40

The response to RFI#T-0108.1 did not provide the requested information.

W/O requests information on the measures used to clean the adjacent structures

---
RFI#T-0108.1 - BSE - Building Adjacent Zone 3 Clean From Dust and Debris Generated By Demolition Work

W/O requests information on the measures used to clean the adjacent structures

---
RFI#T-0108 - BSE - Building Adjacent Zone 3 Clean From Dust and Debris Generated By Demolition Work

Question -
Reference Specification Section 01 15 40
Please confirm that the demolition contractor has satisfied the requirement to clean all dust and debris generated by demolition contract to the satisfaction of the adjacent

SUGGESTION:

ANSWER: **Accept Suggestion:** ☐

There are no prescribed measures. The cleanliness of the adjacent buildings is subjective. Cleanliness is discussed with building owners requesting cleaning of their property upon completion of demolition work and initiated by the adjacent property owner/manager. Discussion with adjacent property owners is coordinated through TJPA Representative and Singer Associates.

Number	Subject	Status	Date Created	Date Required	Date Answered	Cost Impact	Proceed

building owners, and BBII will only be responsible for cleaning
dust and debris generated by BBII during its own operations, after the turnover of these are completed.

Response -
Confirmed. Demolition contractor has satisfied the requirement to clean all dust and debris generated by demolition
contract to the satisfaction of the adjacent building owners to date. This was confirmed through conversation with both
EBi and Singer Associates.

T-0109 **BSE - Existing Drains & SD Basin Clear Of Debris Generated By Demo Contract W** **Closed** **04/21/2011** **05/01/2011** **05/03/2011** **Potentially** ☐

From: Webcor Construction LP Nhi Tran **To:** Turner Construction Compan Daphne Faulkner **Answered By:** Turner Construction Comp Jack Adams

Co-Author: Balfour Beatty Infrastructure, Inc. Ural Yal

REQUEST:

Reference Specification Section 01 15 40

Please confirm per the site walkthrough on 04-18-2011 that all active SD and sewer have been cleared of all debris generated by the demolition contract work.
BBII is requesting as-builts to confirm the above.

SUGGESTION:

ANSWER: **Accept Suggestion:** ☐

Demolition Contractor has continuously covered the Catch Basins and inlets to storm sewers and occasionally has cleared debris generated by others outside of the demolition contract work. Demolition contractor will provide per Demolition Spec. 02-41-13 at conclusion of their work which is scheduled for June 2011.

T-0110 **BSE - Existing Utility Decommissioning Zone 4** **Closed** **04/22/2011** **05/02/2011** **05/02/2011** **Potentially** ☐

From: Webcor Construction LP Nhi Tran **To:** Turner Construction Compan Daphne Faulkner **Answered By:** Turner Construction Comp Jack Adams

Co-Author: Balfour Beatty Infrastructure, Inc. Ural Yal

REQUEST:

Reference RFI#T-0083, Drawing Sheet D-2230, and Specification Section 02 41 01

RFI response to RFI#T-0083 issued on 4-15-2011 has not provided direction for decommissioning or abandoning these utilities per BBII drawing # D-2230 Note 2

SUGGESTION:

ANSWER: **Accept Suggestion:** ☐

Parcel D Zone 4 : Demolition of the Zone 4 sewer/storm drain piping after dewatering work has been completed is BBIi contract scope. The best examples are BSE Drawings D-2230, D-2231, D-5100 through D-5103. Beale St. Zone 4 sewer/storm drain piping decommissioning/abandoning scope is defined in the Webcor-Obayashi RUP Relocation of Utilities

Number	Subject	Status	Date Created	Date Required	Date Answered	Cost Impact	Proceed

Please advise on decommissioning the utilities after dewatering work has been completed.

Project . Coordinate Beale St. Zone 4 sewer/storm drain piping decommissioning/abandonment with the Webcor-Obayashi RUP Relocation of Utilities Project Manager.

Parcel N Zone 4 :Refer to RFI 84.1 for Parcel N: The decommissioning or abandoning these Parcel N utilities which is outside the scope of the Demolition, BSE contract and the RUP contract. Webcor-Obayashi RUP Relocation of Utilities Project Manager will be contacted for reroute decommissioning, or abandonment of these Parcel N parking lot storm drain lines.

T-0111 **301 Mission Wall - Torque Spec** **Closed** **04/22/2011** **05/02/2011** **04/28/2011** **Potentially** ☐

From: Webcor Construction LP David Hungerford **To:** Turner Construction Compan Daphne Faulkner **Answered By:** URS Corporation David Fyfe

Co-Author:

REQUEST:

Reference: S-5000

In regards to the structural steel bolts at the 301 Mission Wall, please confirm that the torque spec is 150 ft-lbs, per attached email.

SUGGESTION:

ANSWER: **Accept Suggestion:** ☐

Confirmed, structural steel anchor bolts shall be installed snug tight to a torque of 150 ft-lbs.

T-0112 **BSE - Project Control** **Closed** **04/22/2011** **05/02/2011** **05/10/2011** **Potentially** ☐

From: Webcor Construction LP Nhi Tran **To:** Turner Construction Compan Daphne Faulkner **Answered By:** Turner Construction Comp Daphne Faulkner

Co-Author: Balfour Beatty Infrastructure, Inc. Ural Yal

REQUEST:

Reference Sheet GT-0100 and Specification Section 01 10 50

Drawing GT-0100 shows four control points. BBII's surveyor, KCA Engineers, have surveyed their locations and found the following:
1) Survey Control Point #101: This point has been damaged - the brass disk is missing, though the rivet remains in the concrete sidewalk. There are score lines in

SUGGESTION:

ANSWER: **Accept Suggestion:** ☐

Response provided by PMPC.

RFI T-0112 is a Survey and Control issue. Webcor/Obayashi is responsible for coordination with their subcontractors and this RFI lies within their domain of responsibility. Please ask W/O to coordinate their Survey Subcontractor (Contract T05.1 Chaudhary & Associates) provide a response to their BSE Subcontractor (Contract TG03 - Balfour Beatty).

Number	Subject	Status	Date Created	Date Required	Date Answered	Cost Impact	Proceed

the concrete BBII assumes would intersect on the brass disk.
2) Project Benchmark Point #54: KCA was able to locate this point. Please confirm that it is acceptable to use the coordinates of this point for horizontal control, even though it is listed as a benchmark.
3) Survey Control Point #106: KCA was unable to locate this point.
4) Survey Control Point #105: KCA was able to locate this point.

With the current condition of the provided control points, KCA is not able to do a hard check on their survey work.

Please confirm that all the control points above may be used for the TG03 BSE Trade Package. Please reset the damaged or missing points for KCA's use.

1) Regarding Control Point #101 by Martin M. Ron (Drawing GT-0100), TJPA is requesting a meeting with Martin M. Ron (DPW). In the meantime W/O surveyors should assume that the riven and cross marks constitute the mark on Drawing GT-0100 and to submit the results of their check survey against the other remaining points to see if the given coordinates match those given on Drawing GT-0100. W/O should consult with Chaudhary & Associates now under subcontract to W/O, as to how Chaudhary & Associates used this point and whether it was damaged then. TJPA will set up a meeting with Martin M. Ron, Chaudhary & Associates, W/O and TJPA representatives.

2) Regarding Project "Benchmark" Point #54, the coordinates of this point given on Drawing GT-0100 are given for use as line survey control as well as elevation.

3) Regarding Control Point #106 (Drawing GT-0100), W/O is to consult with DPW and Chaudhary & Associates as to their knowledge of the last time this point was located. This can be done by W/O alone or in the meeting the TJPA representative will set up. With the 3 remaining Control Points #101, #054, #105 (Drawing GT-0100), W/O should use the given position of Control Point#106. If this has already been done TJPA will re-establish this Control Point.

4) No action requires.

TJPA requests that the BBI and W/O surveyor submit their notes on what they have completed and verified to date.

T-0112.1 **BSE - Project Control** **Closed** **05/20/2011** **05/30/2011** **05/24/2011** **Potentially** ☐

From: Webcor Construction LP Nhi Tran **To:** Turner Construction Compan Daphne Faulkner **Answered By:** Transbay PMPC Alfred Lau

Co-Author:

REQUEST:

Reference RFI#T-0112, Transmittal No. 140-01593, Sheet

SUGGESTION:

ANSWER: **Accept Suggestion:** ☐

Adopting Chaudhary's survey grid control document is

Number	Subject	Status	Date Created	Date Required	Date Answered	Cost Impact	Proceed

GT-0100, Specification Section 01 10 50, and attached document

Chaudhary's Transbay "Survey Grid Control Document" was transmitted to Ed Sum (TJPA) and Agnes Katanics (URS) on 5/18/11 (transmittal #140-01593, attached) following a meeting which took place on 5/17/11 with URS, F3, DPA and TJPA. In an effort to confirm the four survey control points shown on GT-0100, Chaudhary discovered that Point #101 and Point #106 were missing.

Due to the missing points, W/O requests TJPA to either approve Chaudhary's Survey Grid Control Document included as part of transmittal #140-01593, or have the monuments missing from GT-0100 replaced.

acceptable.

T-0112.2 **BSE - Project Control** **Closed** **07/14/2011** **07/24/2011** **Potentially** ☐

From: Webcor Construction LP Tim Maxwell **To:** Turner Construction Compan Daphne Faulkner **Answered By:**

Co-Author:

REQUEST:

Reference RFI #T-0112.1 and attached drawing

Last month Webcor/Obayashi was requested to mark an alleged property line @ 199 Fremont between Beale and Fremont streets per the 12-10-2008 CAD file data provided by the Bruce Storrs of DPW. Chaudhary & Associates completed the task and the results were forwarded for TJPA review on June 20, 2011 via Transmittal # 140-01864. In that transmittal it was recommended that alleged Property Line (PL) data points as indicated within the attached (coordinates added) be presented to Bruce Storrs of DPW for verification of PL data accuracy. Has this been accomplished and, if so, what was the outcome?

Be advised that as previously confirmed in RFI #T- 112.1 Webcor/Obayashi is ONLY using Grid Control for construction reference, layout and staking.

SUGGESTION:

ANSWER: **Accept Suggestion:** ☐

Webcor/Obayashi Joint Venture

PROJECT MANAGEMENT - REQUEST AND ANSWERS LOG

30100 - Transbay Transit Center Project

Number	Subject	Status	Date Created	Date Required	Date Answered	Cost Impact	Proceed
T-0113	**BSE - Unforeseen Object - Metal Casing In Production Pile Extraction Area**	**Closed**	**04/22/2011**	**05/02/2011**	**04/25/2011**	**Potentially**	☐

From: Webcor Construction LP — Nhi Tran
To: Turner Construction Compan — Daphne Faulkner
Answered By: Turner Construction Comp — Jack Adams
Co-Author: Balfour Beatty Infrastructure, Inc. — Ural Yal

REQUEST:

Reference attached sketch and photo

While BBII was excavating the production pile extraction area and exposing the timber piles on 4/19/11, a metal casing was discovered close to pile 302050.
Please advise on how to proceed.

SUGGESTION:

ANSWER: **Accept Suggestion:** ☐

This metal casing is to be removed per Spec. 02-41-01 "Demolition - Existing Underground Structures". If the casing is over an existing wood pile - notify the TJPA Rep/Geotech Engineer prior to removal - refer to Spec. 02-41-19..

Demolition of underground obstructions shall be per Spec 02-41-01 and Demolition Debris shall be handled in accord with Spec. 01-74-00.

T-0114	**BSE - Monitoring Plans and Data for Zone 3**	**Closed**	**04/27/2011**	**05/07/2011**	**05/12/2011**	**Potentially**	☐

From: Webcor Construction LP — Nhi Tran
To: Turner Construction Compan — Daphne Faulkner
Answered By: Turner Construction Comp — Daphne Faulkner
Co-Author: Balfour Beatty Infrastructure, Inc. — Ural Yal

REQUEST:

Reference Specification Section 01 35 65

As discussed at the site walk through meeting 4-18-2011; BBII requests a copy of the demolition contract monitoring plan and any data in relation to demolition contract mitigation monitoring of Zone 3.

SUGGESTION:

ANSWER: **Accept Suggestion:** ☐

Please clarify specifically what mitigation monitoring data you are requesting. Specification Section 01 35 65 is comprised of many different required submittals so we need a clarification on which one you are requesting

---

T-0115	**BSE - Hazardous Material Removed From Site in Zone 3**	**Closed**	**04/27/2011**	**05/07/2011**	**05/02/2011**	**Potentially**	☐

From: Webcor Construction LP — Nhi Tran
To: Turner Construction Compan — Daphne Faulkner
Answered By: Turner Construction Comp — Jack Adams
Co-Author: Balfour Beatty Infrastructure, Inc. — Ural Yal

REQUEST:

Reference Specification Section 00 03 35

Please confirm that all hazardous material has been removed from site per the extent of demolition contract drawings for zones 3.

SUGGESTION:

ANSWER: **Accept Suggestion:** ☐

Hazardous material has been removed from site per the extent of demolition contract drawings for zones 3. Zone 3 above ground structures and foundations were demolished to extent shown on Demolition contract drawings and Demolition Spec. 02-41-00. Hazardous materials abatement scope was completed within the scope of demolition only. Refer to Demolition Drawings D-1050, D-1051 and D-1073 and D-1074 for representation of limits of structures demolished and hazardous material abatement. Utilities were cut/capped and were demolished to extent shown on Demolition contract drawings and Demolition Spec.

Number	Subject	Status	Date Created	Date Required	Date Answered	Cost Impact	Proceed

02-41-00. Refer to drawings D-1202-1207 and 1210-1215 inclusive for representation of limits of extent of removal of utilities.

BSE Contractor to handle remaining Hazardous Materials in accord with their contract documents. Ref: BSE Drawings D-5101 and D-5102 for extent of BSE Demolition.

BSE Contractor to handle remaining demolition and abatement in accord with BSE Spec 00-08-14 Health and Safety Criteria Para 1.2 and 1.3 Lead hazards, BSE Spec. 02-41-01 "Demolition" and BSE Spec. 01-13-50 "Hazardous Materials Procedures".

T-0116 **BSE - Demolition Contract Drawings** **Closed** **04/27/2011** **05/07/2011** **05/02/2011** **Potentially** ☐

From: Webcor Construction LP Nhi Tran **To:** Turner Construction Compan Daphne Faulkner **Answered By:** Turner Construction Comp Jack Adams

Co-Author: Balfour Beatty Infrastructure, Inc. Ural Yal

REQUEST:

Please supply BBII with an electronic copy (PDF), of the 'issued for construction' drawings for the demolition contract (EBI).

SUGGESTION:

ANSWER: **Accept Suggestion:** ☐

BBII should contract Webcor-Obayashi for an electronic copy (PDF), of the 'issued for construction' drawings for the demolition contract.

T-0116.1 **BSE - Demolition Contract Drawings** **Closed** **05/03/2011** **05/13/2011** **05/03/2011** **Potentially** ☐

From: Webcor Construction LP Nhi Tran **To:** Turner Construction Compan Daphne Faulkner **Answered By:** Turner Construction Comp Daphne Faulkner

Co-Author: Balfour Beatty Infrastructure, Inc. Ural Yal

REQUEST:

Reference response to RFI#T-0116

Webcor-Obayashi cannot verify "issued for construction drawings" in PDF format for the demolition contract in the past communications.
If the confirmed drawing set was sent to Webcor-Obayashi before, please let us know the transmittal number and the date.
If not, please send us the drawing set immediately.

SUGGESTION:

ANSWER: **Accept Suggestion:** ☐

Demolition Issued for Construction drawings were issued to W/O on 12/8/2010 via Transmittal #110-00076 in Project (110) in Constructware. Please find a copy of the transmittal attached for your use.

Number	Subject	Status	Date Created	Date Required	Date Answered	Cost Impact	Proceed

---
Please supply BBII with an electronic copy (PDF), of the 'issued for construction' drawings for the demolition contract (EBI).

T-0117 **BSE - As-built Drawings for Utility Decommissioning in Zone 3** **Closed** **04/27/2011** **05/07/2011** **05/02/2011** **Potentially** ☐

From: Webcor Construction LP Nhi Tran **To:** Turner Construction Compan Daphne Faulkner **Answered By:** Turner Construction Comp Jack Adams

Co-Author: Balfour Beatty Infrastructure, Inc. Ural Yal

REQUEST:

Reference Demo Contract Drawing Sheets D-1202,D-1203, D-1204, D1205, D1206 and Specification Section 02 41 01

Please provide as-built drawings for all utilities that have been decommissioned, or cut and capped per the demolition contract for Zone 3.

SUGGESTION:

ANSWER: **Accept Suggestion:** ☐

Demolition as-built drawings for Zone 3 utilities that have been decommissioned, or cut and capped per the demolition contract are attached. Drawing D-1202-1207 and D1210 through D1215 inclusive.

NOTE: Demolition contractor is not contractually responsible for submitting their As-Built drawings until completion of their contract which is June 2011 ref. Spec. 01-17-00 for Demolition Contractor.

T-0118 **BSE - Crash Cushion Modules on Natoma & Minna Street** **Closed** **04/27/2011** **05/07/2011** **05/02/2011** **Potentially** ☐

From: Webcor Construction LP Nhi Tran **To:** Turner Construction Compan Daphne Faulkner **Answered By:** Turner Construction Comp Jack Adams

Co-Author: Balfour Beatty Infrastructure, Inc. Ural Yal

REQUEST:

Reference Demo Contract Drawing Sheet D-1007 - Note 5

Currently the crash cushion or k-rail as specified in the Demo Drawing D-1007 note 5 has not been installed. Please confirm the above will be installed by the demo contractor.

SUGGESTION:

ANSWER: **Accept Suggestion:** ☐

Confirmed. Demolition Contractor will install Crash Cushion modules at K -Rails installed on Fremont St (east), Natoma St. and Minna St. in accord with Demolition Drawing D-1007.

T-0119 **301 Mission Wall - Metal Stud Layout Alignment** **Closed** **04/28/2011** **05/08/2011** **05/05/2011** **Potentially** ☐

From: Webcor Construction LP David Hungerford **To:** Turner Construction Compan Daphne Faulkner **Answered By:** URS Corporation David Fyfe

Number	Subject	Status	Date Created	Date Required	Date Answered	Cost Impact	Proceed

Co-Author:

REQUEST:

Reference: RFI T-0098, Sheet A-6000

Per response to RFI T-0098, the 10" x 10" tube steel columns are to be set in the center of the 14" concrete wall. The architectural drawings (sheet A-6000 dated 11/04/10) show 10" metal studs aligning with the 10" tube steel, however, per response to RFI T-0098, the tube steel is to shift in the architectural drawings 1/2" and align in the center of the concrete wall. Please confirm that the metal studs will remain per plan, and not shift as the steel tube has.

SUGGESTION:

ANSWER: **Accept Suggestion:** ☐

The light gauge steel studs will remain per plan as shown in Section B on S-5000. The light gauge steel studs shall be placed on both sides of the tube steel as shown on the contract documents.

Per direction provided at 5/2 weekly coordination meeting, 1 - 5/8" light gauge studs shown on Detail A, Sheet A-6000 shall be in line with 10" light gauge steel stud (i.e. both sides of tube steel).

T-0120	301 Mission Wall - Stone Panel Layout	Closed	04/27/2011	05/07/2011	05/20/2011	Potentially ☐

From: Webcor Construction LP David Hungerford **To:** Turner Construction Compan Daphne Faulkner **Answered By:** URS Corporation David Fyfe

Co-Author:

REQUEST:

Reference: RFI T-0042

Per RFI T-0042, the concrete wall height increased to achieve a min 18" above the finished paver surface. Please clarify if the exposed concrete areas shown on A-5000 are to to be min 18" above the pavers. If so, the 1st stone above the exposed concrete would have to be trimmed. Please clarify.

SUGGESTION:

ANSWER: **Accept Suggestion:** ☐

Per contract documents, at exposed concrete wall sections, full height of concrete wall above finished top of paver (and finished concrete walks at east and west ends) shall be exposed.

Cutting of stone panel(s) to a height of approximately 6.84" and cutting of stone panels in an "L" shape as shown in attached sketches, "Attachment for RFI T-0120" and "Part of Sheet A-5000" transmitted/emailed to URS from Webcor-Obayashi on 5/19/2011 is acceptable.

Per contract documents, at east end of wall (east of east most section of exposed concrete wall) stone panels shall extend down to finished top of paver/concrete walk. See annotation by URS on attached sketch, "Part of Sheet A-5000_Annotated by URS."

(Answered by: David Fyfe on 05/20/11)
(Response forwarded to Webcor-Obayashi on 05/22/11)

Webcor/Obayashi Joint Venture

PROJECT MANAGEMENT - REQUEST AND ANSWERS LOG

30100 - Transbay Transit Center Project

Number	Subject	Status	Date Created	Date Required	Date Answered	Cost Impact	Proceed
T-0121	**301 Mission Wall - Aluminum Panel Layout**	**Closed**	**04/27/2011**	**05/07/2011**	**05/10/2011**	**Potentially**	☐

From: Webcor Construction LP David Hungerford **To:** Turner Construction Compan Daphne Faulkner **Answered By:** URS Corporation David Fyfe

Co-Author:

REQUEST:

Reference: A-5000

Regarding the aluminum panels on the 301 Mission wall, bottom panel at each end of the wall will need to be trimmed. The standard panel is 2-11 1/2" tall, but the bottom panel measures out to be 2'-1"+/- on the west end and 2'-9"+/- on the east. Please confirm that this is acceptable. If not, please advise.

SUGGESTION:

ANSWER: **Accept Suggestion:** ☐

Per contract documents aluminum panels shall match original aluminum panels. Existing bottom aluminum panel(s), as shown in photos on sheet C-5010, have an approximate 1" gap between the bottom of panel and top of existing grade.

Contractor shall place bottom aluminum panel(s) to provide an approximate 1" gap between bottom of panel and top of finished/existing grade. It is acceptable to provide bottom panel(s) that are less than 2' - 11-1/2" tall to provide an approximate 1" gap between bottom of panel(s) and top of finished/existing grade.

T-0122	**BSE - Hazardous Material Removed From Zone 3 (Potential Contaminated Material**	**Closed**	**04/29/2011**	**05/09/2011**	**05/02/2011**	**Potentially**	☐

From: Webcor Construction LP Nhi Tran **To:** Turner Construction Compan Daphne Faulkner **Answered By:** Turner Construction Comp Jack Adams

Co-Author: Balfour Beatty Infrastructure, Inc. Ural Yal

REQUEST:

Reference Specification Section 00 03 35, 1.2

During Investigation of Zone 3, BBII discovered potential lead based material existing on site. The specific area of concern is the pedestals on Fremont Street.

Please confirm that all contaminated material (specifically the referenced pedestals) as specified in the specification section 00 03 35, Article 1.2 has been removed and abated by the Demolition Contractor.

BBII is scheduled to remove these pedestals next week and cannot proceed with this critical work until it is confirmed that the site is cleared of lead based materials as required by the Specifications.

The TJPA's attention is directed to the following Section of the Specifications:

SECTION 00 03 35 ¿ EXISTING CONDITIONS: HAZARDOUS MATERIALS

"1.2 HAZARDOUS MATERIALS REPORTS

SUGGESTION:

ANSWER: **Accept Suggestion:** ☐

Hazardous material has been removed from site per the extent of demolition contract drawings for zones 3 - this does not include the "pedestals" in Zone 3. The building and above ground structures were demolished to the extent shown on Demolition contract drawings. Hazardous materials abatement scope was completed within the scope of demolition only. Refer to Demolition Drawings D-1050, D-1051 and D-1073 for representation of limits of structures (specifically the referenced pedestals) demolished and hazardous material abatement.

BSE Contractor to handle remaining demolition and abatement in accord with BSE Spec 00-08-14 Health and Safety Criteria Para 1.2 and 1.3 Lead hazards, BSE Spec. 02-41-01 "Demolition" and BSE Spec. 01-13-50 "Hazardous Materials Procedures".

Number	Subject	Status	Date Created	Date Required	Date Answered	Cost Impact	Proceed

A. The TJPA's environmental consultants have surveyed the facility for the presence of various hazardous materials. Materials investigated may include asbestos, lead, PCB ballasts, mercury containing lamps, contaminated soils, underground storage tanks, and other hazardous materials. The demolition contractor for the Demolition project (Evans Brothers Inc.) is responsible for removing and abating products containing asbestos, lead, or PCB ballast, and mercury-containing lamps."

T-0123 **301 Mission Wall - SASM and Insulation Tape Materials** **Closed** **04/29/2011** **05/09/2011** **05/05/2011** **Potentially** ☐

From: Webcor Construction LP David Hungerford **To:** Turner Construction Compan Daphne Faulkner **Answered By:** URS Corporation David Fyfe

Co-Author:

REQUEST:

Reference: S-0002, A-6000

Clarification is requested regarding the notes and details on Sheet S-0002, and A-6000 (see attached marked up sheets). Note 1 within the "WALL FINISH" section of the notes on page S-0002 says to use insulation separation tape between treated wood surfaces and steel framing. In note 2 on page S-0002, SASM is specfied as a different material, but on the details of page A-6000 SASM is shown to be used in the same areas as is described for the insulation tape. It is the interpretation of Transworld that the insulation tape is to be used at all locations referenced on sheet A-6000 as "SASM". Please clarify if these two different materials are to be applied in the same areas.

SUGGESTION:

ANSWER: **Accept Suggestion:** ☐

Insulation tape shall be used between all treated wood and metal surfaces. SASM shall be used as a waterproofing barrier around the entire wall as shown on the contract documents.

These two materials (SASM and insulation tape) may overlap in certain locations where insulation tape is provided between treated wood and metal surfaces and where waterproofing is also required.

T-0123.1 **301 Mission Wall - SASM and Insulation Tape Materials** **Closed** **05/06/2011** **05/16/2011** **05/09/2011** **Potentially** ☐

From: Webcor Construction LP David Hungerford **To:** Turner Construction Compan Daphne Faulkner **Answered By:** URS Corporation David Fyfe

Co-Author:

REQUEST:

Reference: RFI T-0123, A-6000, S-0002

SUGGESTION:

ANSWER: **Accept Suggestion:** ☐

This is not a new contract requirement. SASM is referred to on A-6000 in two different instances. It is

Number	Subject	Status	Date Created	Date Required	Date Answered	Cost Impact	Proceed

The response provided to RFI T-0123 is in conflict with the contract documents. The response requires the contractor to create a waterproofing barrier for the entire length of the wall; however, the contract documents do not indicate a complete waterproofing barrier. References to SASM on page A-6000 instructs the application of SASM at all points where pressure-treated or moisture resistant wood comes in contact with metal. This application instruction, therefore, would not result in a waterproof barrier along the entire length of the wall. Please clarify if on the details "SASM" was intended to read "insulation tape", because the application locations of the SASM, as per A-6000, are called out and described to be at all locations of the insulation tape defined on S-0002.

In the alternative, is it the intention of the design team to apply additional waterproofing not shown on the contract documents?

referred to when there is treated wood blocking/ elements. At these locations, the insulation tape shall be used. There is also SASM shown on the front and back face of the wall as shown on Detail D, A-6000. Contractor shall provide SASM as shown.

T-0124 **301 Mission Wall - Dimension Between Screen Wall and Existing Garage Wall** **Closed** **05/02/2011** **05/12/2011** **05/31/2011** **Potentially** ☐

From: Webcor Construction LP David Hungerford **To:** Turner Construction Compan Daphne Faulkner **Answered By:** URS Corporation David Fyfe

Co-Author:

REQUEST:

Reference: C-2000

The dimension between the new location of the 301 Wall and the existing garage wall is approx 8". Please advise as to how this gap is to be closed off.

SUGGESTION:

ANSWER: **Accept Suggestion:** ☐

Gap shall be closed for the full height of the new interim screen wall and width of gap. The closure of this gap must meet ADA handrail loading requirements as well as the wind and seismic loading requirements. See attached Figures 1, 2, and 3 for recommended details of gap closure.

Per discussions at weekly meeting on 5/23/2011, Contractor may provide suggested alternatives to address the 8-inch gap for URS to review.

T-0124.1 **301 Mission Wall Enclosure Panel Method of Connection** **Closed** **09/01/2011** **09/16/2011** **09/13/2011** **Potentially** ☐

From: Webcor Construction LP Michael Constable **To:** Turner Construction Compan Gary Krutsch **Answered By:** URS Corporation David Fyfe

Co-Author:

Number	Subject	Status	Date Created	Date Required	Date Answered	Cost Impact	Proceed

REQUEST:

Reference: RFI T- 0124, URS response to RFI T- 0124

Per recent Change Order negotiations for the required 301 Mission Wall end panel per RFI # T-0124, the panel detail is now being revised to a two-piece, glued enclosure panel. Please confirm the method of two-piece panel attachment to the existing wall is the same as that indicated in RFI # T-0124.

SUGGESTION:

ANSWER: **Accept Suggestion:** ☐

Material substitution (two 1/8" thick aluminum panels glued together in lieu of a single 3/16" thick aluminum panel), "Proposed gap closure per RFI #T-0124-Option3" provided in attached Change Request No. 10C from Transworld Construction Inc. to Webcor/Obayashi dated 7/26/2011 is acceptable, provided aluminum panels are fastened to metal stud with rivets or sheet metal screws at 24" o.c.

T-0125 **BSE - CDSM Corner Overlap** **Closed** **05/02/2011** **05/12/2011** **05/06/2011** **Potentially** ☐

From: Webcor Construction LP Nhi Tran **To:** Turner Construction Compan Daphne Faulkner **Answered By:** Adamson Associates, Inc George Metzger

Co-Author: Balfour Beatty Infrastructure, Inc. Ural Yal

REQUEST:

Reference Sheets GT-2101-2103, GT-5101 and Specification Section 31 56 13

In the Owner's preferred method of soil mixing, the triple auger method, a continuous wall is formed by drilling adjacent sets of columns with a 100% overlap of the outer columns (see 2/GT-5101). A CDSM wall's strength, permeability, and homogeneity is largely contingent upon this remixing action. This overlap also helps ensure the verticality and alignment, as the augers in the secondary panels tend to follow the path of the outer columns of the primary panels. Based upon the beam and column layout shown in GT-2101-2013, the corners formed by Wall Segment A/33.5-35 & 35-1 and R2-1 & X1-1 do not receive the complete remixing obtained by the typical 100% outer column overlap. These corner details are atypical compared to industry standards, and will lead to permeability issues. Is it acceptable to move a small number of beams slightly closer together (~0.1') near those corners, such that the panel layout is shifted enough to have a 100% column overlap at the corners?

SUGGESTION:

ANSWER: **Accept Suggestion:** ☐

ARUP Response:

Arup received from DND the two sketches attached to this response at the BSE meeting on May 4, 2011 as further clarification of the Contractor's proposal. The Contractor's proposal is acceptable.

T-0126 **BSE - Confirmation of Utility Abandonment on Fremont St, East side of Phase 1 El** **Closed** **05/02/2011** **05/12/2011** **05/12/2011** **Potentially** ☐

From: Webcor Construction LP Nhi Tran **To:** Turner Construction Compan Daphne Faulkner **Answered By:** Transbay PMPC Douglas Jacobson

Co-Author: Balfour Beatty Infrastructure, Inc. Ural Yal

Number	Subject	Status	Date Created	Date Required	Date Answered	Cost Impact	Proceed

REQUEST:

In order to drive sheet piles for the hammer head wall location along Fremont St and the North West Corner of Zone 4, BBII requests confirmation of the abandonment of all utilities east of the PG&E electrical duct bank. BBII also will need the As-Build drawing of the PG&E duct bank location.

BBI needs this information to proceed on the extra unforeseen concrete wall in the hammer head area of the buttress wall.

SUGGESTION:

ANSWER: **Accept Suggestion:** ☐

Today, 5/11, BBI has sawcut AC and removed one lane-width and two laborers have exposed the utility lines in the street east of the PG&E duct bank. Verizon came and cut two of their 4" ducts. The remaining lines will be identified by the utility subcontractors in the next day or two. Please contact Jason Dunne (W/O) for the field conditions of abandoned utilities.

T-0127 **BSE - Openings Below Screen Wall at 301 Mission Building** **Closed** **05/04/2011** **05/14/2011** **05/16/2011** **Potentially** ☐

From: Webcor Construction LP Nhi Tran **To:** Turner Construction Compan Daphne Faulkner **Answered By:** URS Corporation David Fyfe

Co-Author: Balfour Beatty Infrastructure, Inc. Ural Yal

REQUEST:

Reference Sheets GT-2201, GT-5102 Sec. 10, and attached photos

In the northwest corner of Zone 4, BBII has exposed 2 openings below the screen wall in the 301 Mission structure. The first opening is located approximately 6 feet east of gridline 27 and the second opening is located approximately 8 feet east of gridline 29. These openings are approximately 18" x 36" in size. (See attached pictures).

These openings are not shown on construction documents. Please advise how to proceed. BBII requests an expedited response prior to the end of this week, as this matter is pertinent to backfill operation.

SUGGESTION:

ANSWER: **Accept Suggestion:** ☐

Plugging of existing ventilation shafts/openings below screen wall is specified in the 301 Mission Interim Screen Wall contract documents. Webcor-Obayashi to coordinate all work amongst tradegroup packages/subcontractors.

T-0128 **BSE - Old Existing Concrete Floor Along 301 Mission in Zone 4** **Closed** **05/05/2011** **05/15/2011** **05/12/2011** **Potentially** ☐

From: Webcor Construction LP Nhi Tran **To:** Turner Construction Compan Daphne Faulkner **Answered By:** Transbay PMPC Douglas Jacobson

Co-Author: Balfour Beatty Infrastructure, Inc. Ural Yal

REQUEST:

Reference Specification Section 02 41 01

SUGGESTION:

ANSWER: **Accept Suggestion:** ☐

The obstruction was removed by BBI. Remove pre-trench obstructions per contract requirements and

Number	Subject	Status	Date Created	Date Required	Date Answered	Cost Impact	Proceed

During pre-trenching, BBII found an existing concrete floor along the 301 Mission St garage wall. It is located between the 301 Mission building wall and the buttress area between Grid Line 29 and 30. BBII has exposed a 20ft-30ft section of this floor (approximately on Grid Line A between Grid Lines 29 and 30), and have demolished the slab within the pre-trench area that has been exposed. It appears to BBI that this unforeseen obstruction continues further into the buttress area. If this unforeseen obstruction continues further into the buttress area, it would have to be removed so the buttress construction can continue.

Please advise on how to proceed.

Force Account agreement with TJPA.

T-0129 **BSE - Unforeseen Timber Pile in Pre-Trench Along 301 Mission in Zone 4** **Closed** **05/05/2011** **05/15/2011** **05/06/2011** **Potentially** ☐

From: Webcor Construction LP Nhi Tran **To:** Turner Construction Compan Daphne Faulkner **Answered By:** Adamson Associates, Inc George Metzger

Co-Author: Balfour Beatty Infrastructure, Inc. Ural Yal

REQUEST:

Reference Specification Section 02 41 01 and attached photo

During pre-trenching, BBI discovered existing timber piles along the 301 Mission St garage wall between Grid Lines 29 and 30. These piles are less than 1foot away from the 301 Mission St garage wall and within the CDSM shoring wall limits. These unforeseen piles need to be removed as soon as possible. Please advise on how to proceed.

W/O requests that the Engineer Of Record (Arup) review this on site with BBII prior to responding.

SUGGESTION:

ANSWER: **Accept Suggestion:** ☐

Arup Response:

1. For the westernmost 3 timber piles along the line of piles 16 to 18'' from the face of the 301 Mission wall: in order to minimize ground loss at 20 to 30 ft depth beneath the PG+E vault and adjacent corridor, BBI needs to use best endeavors to carry out the pile removal using the method agreed following the initial trials. This means vibrating in the casing in advance of removing any of those piles.
2. For the remaining timber piles along this line, the piles are anticipated to be 30' long and will thus lie within the influence of the c. 70' deep shoring wall for the 301 Mission Low-rise parking garage. Each pile can be removed without casing, working from east to west. Concrete to be placed in the remnant pile hole as rapidly as possible after pile removal and before removal of the adjacent pile.

T-0130 **301 Mission Wall - FCR 043 Concrete Wall Crack** **Closed** **05/06/2011** **05/16/2011** **05/09/2011** **Potentially** ☐

From: Webcor Construction LP David Hungerford **To:** Turner Construction Compan Daphne Faulkner **Answered By:** URS Corporation David Fyfe

Number	Subject	Status	Date Created	Date Required	Date Answered	Cost Impact	Proceed

Co-Author:

REQUEST:

Reference: Field Condition Report No. 043

See attached FCR No. 043. The east end of the 301 Mission concrete wall has cracks and also spalled in one corner. This had been discussed on 05/02/11, in Transworld's subcontractor meeting with Turner, URS, TJPA, Webcor-Obayashi, and Transworld. Please advise as to how Transworld is to repair the spallled corner and cracks.

SUGGESTION:

ANSWER: **Accept Suggestion:** ☐

Defective concrete shall be removed and concrete shall be restored in accordance with ACI 301 Section 5.3.7.3. An epoxy bonding agent shall be used in lieu of bonding grout where new concrete and existing concrete interface. After removal of the defective concrete and prior to restoration, contractor shall contact engineer to inspect the removal areas in field.

If crack(s) go beyond/into the anchor bolts and reinforcement, the concrete shall be removed minimum of 1" around the reinforcement and anchor bolts. Contractor shall shore/support the existing structural steel as necessary in order to prevent damage to other areas of existing concrete.

T-0130.1 | **301 Mission Wall - FCR 043 Concrete Wall Patch Material** | **Closed** | **06/09/2011** | **06/19/2011** | **06/13/2011** | **Potentially** ☐

From: Webcor Construction LP David Hungerford **To:** Turner Construction Compan Daphne Faulkner **Answered By:** URS Corporation David Fyfe

Co-Author:

REQUEST:

Reference: FCR #043, RFI T-0130, and attached product data

Response to RFI T-0130 directs Transworld to repair the damaged concrete at the 301 Mission Wall, as described in Field Condition Report 043. Attached are product data sheets which satisfy the requirements noted in response to RFI T-0130. Please review and confirm that the attached materials are acceptable to patch the damaged concrete.

SUGGESTION:

ANSWER: **Accept Suggestion:** ☐

The submitted materials are acceptable to patch the damaged concrete. All materials shall be prepared, mixed and placed in accordance with manufacturers' recommendations.

T-0131 | **301 Mission Wall - Framing Modifications and Base Plate Conflict** | **Closed** | **05/06/2011** | **05/16/2011** | **05/20/2011** | **Potentially** ☐

From: Webcor Construction LP David Hungerford **To:** Turner Construction Compan Daphne Faulkner **Answered By:** URS Corporation David Fyfe

Co-Author:

REQUEST:

Reference: C/S-5000, B/A-6000, attached sketches, and referenced RFI's

SUGGESTION:

ANSWER: **Accept Suggestion:** ☐

Item/Issue 1) Contractor shall cut base plate neat, flush with stucco slot/face of concrete. Extent of cut(s) shall not exceed dimension(s) shown in attached

Number	Subject	Status	Date Created	Date Required	Date Answered	Cost Impact	Proceed

Field verified measurements and layout for the location of the structural steel does not coordinate with the stucco inset locations as shown on detail C/S-5000. In addition framing around the perimeter of the wall (aluminum panel locations) had to be modified due to assembly and installation methods. (See attached pictures and sketches. This RFI addresses three framing issues. All issues have been discussed in the weekly 301 Mission Wall subcontractor meeting with URS, Turner, Transworld, TJPA and Webcor-Obayashi.

1.) In two of the four stucco slot locations, field conditions show that a portion of the base plate conflicts with the stucco slot. This base plate encroaches into the stucco panel per dimensions shown on the attached sketch. Please advise.

2.) The structural steel had been relocated to CL of the wall (per RFI T-0098) and therefore studs around the steel per B/A-6000 could not be set per plan. Transworld has installed hat channel metal framing to the face of the structural steel tube using fasteners into the structural steel as per RFI T-0106 as well as modified the boxed framing per attached sketches around the perimeter of the wall. Sizes of metal framing were used to align with adjacent framing per plan. This work is currently installed, please confirm framing modifications per attached marked up details are acceptable.

3.) Blocking a the top of the wall at the north side (between the framing and 8"x 8" tube steel) was not installed, as there was no room between the framing and steel. Framing was attached directly to the tube steel. See attached.

Please confirm that the framing modifications in item 2 and 3 are acceptable and provide direction at the base plate conflict per item 1.

sketch, "RFI T-0131: (Item 1) Base Plate conflict with slot locations" provided by WO/Transworld. Contractor shall field apply complete paint system as stated in contract documents following cutting procedures. Any damage to non-shink grout and/or concrete below shall be repaired. All architectural wall finishes (SASM, cement board, stone panels, aluminum panels, 3-coat stucco, etc.) shall be installed as shown on contract documents.

Item/Issue 2) We note this request is for convenience of the Contractor and on this basis take no exception to the framing modifications as shown in attached sketches, "RFI T-0131: (Item 2) Metal Stud Framing Modification at Perimeter of Wall (Aluminum Panel locations)" and "RFI T-0131: (Item 2) Metal Stud Framing Modification Surrounding Structural Steel (Slot locations)" provided by WO/Transworld. Accordingly, no change in contract and/or extension in schedule will be provided to accommodate this Contractor request. All impacts associated with proposed framing modifications, including installation of all architectural wall finishes (SASM, cement board, stone panels, aluminum panels, 3-coat stucco, etc.) as shown on contracts documents, cost and schedule shall be borne solely by the Contractor.

Item/Issue 3) Intention of wood blocking is to provide spacing and allow fastening of aluminum panels. If there is not sufficient space to provide wood blocking, it is acceptable to fasten aluminum panels directly to tube steel members and omit wood blocking on north side of wall as shown in attached sketch, "RFI T-0131: (Item 3) Omission of Blocking Between 8" x 8" Tube Steel and Framing (North Side Only). Accordingly, prior to deletion of wood blocking Contractor shall ensure all architectural wall finishes (SASM, cement board, stone panels, aluminum panels, 3-coat stucco, etc.) can and will be installed as shown on contract documents.

Webcor/Obayashi Joint Venture

PROJECT MANAGEMENT - REQUEST AND ANSWERS LOG

30100 - Transbay Transit Center Project

Number	Subject	Status	Date Created	Date Required	Date Answered	Cost Impact	Proceed
T-0132	BSE - Lead Based Paint On Bent Pedestals	Closed	05/06/2011	05/16/2011	05/09/2011	Potentially	☐

From: Webcor/Obayashi Joint Venture — Masashi Kojima
To: Turner Construction Compan — Daphne Faulkner
Answered By: Balfour Beatty Infrastructu — Ural Yal
Co-Author: Balfour Beatty Infrastructure, Inc. — Ural Yal

REQUEST:
Please see information attached regarding the paint on the old bent Pedestals existing along Fremont Street. The information provided indicates the level of lead is above the permissible level. This area is now considered part of the lead abatement program; this work will be commencing on Saturday 5/7/2011. Cost of this Lead abatement will be charged to the owner.

SUGGESTION:

ANSWER: **Accept Suggestion:** ☐
Voided. See the attached email on 05/09/2011.

Number	Subject	Status	Date Created	Date Required	Date Answered	Cost Impact	Proceed
T-0133	BSE - CDSM Test Section & Start of Work	Closed	05/09/2011	05/19/2011	05/10/2011	Potentially	☐

From: Webcor Construction LP — Nhi Tran
To: Turner Construction Compan — Daphne Faulkner
Answered By: Adamson Associates, Inc — George Metzger
Co-Author: Balfour Beatty Infrastructure, Inc. — Ural Yal

REQUEST:
Reference Specification Section 31 56 13, 1.6. F. 1-2

Please confirm that the acceptance of Zone 4 Test Section strength and permeability results is the prerequisite to begin Zone 4 & 3 shoring work, and acceptance of the Zone 1/2 Test Section results is the prerequisite to begin work Zones 1 & 2.

SUGGESTION:

ANSWER: **Accept Suggestion:** ☐
ARUP Response:

The acceptance of Zone 4 Test Section strength and permeability results is the prerequisite to begin Zone 4 & 3 shoring work, and acceptance of the Zone 1/2 Test Section results is the prerequisite to begin work Zones 1 & 2.

Number	Subject	Status	Date Created	Date Required	Date Answered	Cost Impact	Proceed
T-0134	BSE - 301 Mission Guide Wall	Closed	05/09/2011	05/19/2011	05/12/2011	Potentially	☐

From: Webcor Construction LP — Nhi Tran
To: Turner Construction Compan — Daphne Faulkner
Answered By: Transbay PMPC — Douglas Jacobson
Co-Author: Balfour Beatty Infrastructure, Inc. — Ural Yal

REQUEST:
Reference Sheet GT-2103, Specification Section 31 56 13, and attached sketch

Typically in CDSM shoring, a guide frame constructed from steel beams is used, which straddles the CDSM wall. The guide frame is used to align the augers, align and place beams, and expand/collapse the drill rods. The existing 301 Mission building wall is approximately 5-6" away from the outside of the CDSM shoring wall. As such it will not permit placement of a standard steel beam guide frame. Is it acceptable to construct a temporary concrete/rebar guide wall on the outside of the CDSM wall and adjacent to the existing 301 Mission footing wall? See

SUGGESTION:

ANSWER: **Accept Suggestion:** ☐
This guide wall proposal is for Contractor convenience.

Please submit more information for this proposal, e.g., spacing, depth, and diameter of anchors/studs, discuss means and methods, and describe condition that contractor will leave the CMU wall when finished.

Once the above information is returned, TJPA will meet with 301 Mission to negotiate authorization for this proposal.

Number	Subject	Status	Date Created	Date Required	Date Answered	Cost Impact	Proceed

attached sketch details of the proposed guide wall.

T-0135 **BSE - Unforeseen Timber Piles in Pre-Trench Along 301 Mission St. in Zone 4** **Closed** **05/10/2011** **05/20/2011** **05/12/2011** **Potentially** ☐

From: Webcor Construction LP Nhi Tran **To:** Turner Construction Compan Daphne Faulkner **Answered By:** Adamson Associates, Inc George Metzger

Co-Author: Balfour Beatty Infrastructure, Inc. Ural Yal

REQUEST:

Reference RFI#T-0129 and Specification Section 02 41 01

The response to BBII RFI 094 [RFI #T-0129] regarding the unforeseen timber piles along 301 Mission Street, "Concrete to be placed in the remnant pile hole as rapidly as possible after pile removal of the adjacent pile."

Per DND Construction, concrete backfill is incompatible with soil mixing methods. Please provide clarification on what material will be placed within the CDSM wall limits that will not conflict with the mixing of the CDSM wall.

SUGGESTION:

ANSWER: **Accept Suggestion:** ☐

ARUP Response:

The material for filling the void left by the extracted timber pile needs to be filled by a material which can be drilled by the CDSM shoring equipment.

Kevin Clinch

12 May 2011

T-0136 **301 Mission Wall - Manhole Vents** **Closed** **05/10/2011** **05/20/2011** **05/20/2011** **Potentially** ☐

From: Webcor Construction LP David Hungerford **To:** Turner Construction Compan Daphne Faulkner **Answered By:** Turner Construction Comp Kevin Chiu

Co-Author:

REQUEST:

Reference: A/C-5000,

Per Justin Burke of Turner Construction, the 3' tall sleeves on the north side of the 301 Mission Screen Wall are per PG&E preference. At Turner's request, please review the design for the sleeves as shown on C-5000 and consider a grated cover over the manholes at grade, as opposed to the 3' tall sleeves per the documents.

SUGGESTION:

ANSWER: **Accept Suggestion:** ☐

5/23/11 UPDATED RESPONSE from Kevin Chiu:
Pending approval by TJPA, a CR may be issued.
==========
5/20/11 Response per Kevin Chiu:
Contractor is to eliminate the referenced "(N) 3'-0" HIGH CIP CONCRETE SLEEVE OVER MANHOLE WITH (N) KADEE S.S. CIRCULAR GRATE SATIN FINISH (TWO LOCATIONS)" per C-5000. Elimination of sleeves was agreed upon by TJPA (Brian Dykes), PG&E (Mike Balmy) and Mission Street Development (Steve Hood).

Webcor/Obayashi Joint Venture

PROJECT MANAGEMENT - REQUEST AND ANSWERS LOG

30100 - Transbay Transit Center Project

Number	Subject	Status	Date Created	Date Required	Date Answered	Cost Impact	Proceed

5/13/11 Response per URS' David Fyfe:
3' tall concrete sleeves are required per the Easement Agreement between the TJPA and Mission Street Development, LLC (MSD). Eliminating use of 3' tall concrete sleeve(s) and providing grated PG&E manhole lid(s) at existing grade elevation must be approved by TJPA, MSD, and PG&E.

T-0137 **BSE - Unforeseen Obstruction - Concrete Lip Off 301 Mission St Garage Footing** **Closed** **05/10/2011** **05/20/2011** **05/11/2011** **Potentially** ☐

From: Webcor Construction LP Nhi Tran **To:** Turner Construction Compan Daphne Faulkner **Answered By:** Transbay PMPC Roger Rothenburger

Co-Author: Balfour Beatty Infrastructure, Inc. Ural Yal

REQUEST:

Reference Specification Section 02 41 01 and attached photo

During Pre-Trench, BBII found an existing concrete lip/shelf footing along the low-rise 301 Mission St. garage wall. The footing consists of reinforced concrete, and is a part of the 301 Mission St. garage structure. It is not a separate structure, and it protrudes into the CDSM wall location in multiple places and does not allow enough room for the drill rig to construct the CDSM wall. The lip/shelf protrudes out at the western corner of the 301 Mission St. garage and goes to the east 81-feet. The footing is then flush with the 301 Mission St garage wall for 67-feet.

This is a potential delay in pre-trenching and the installation of the CDSM wall. It is a part of the 301 Mission St garage, and will need to be removed flush with the 301 Mission St. wall.

Please see photo attached.

Please advise BBII as to how to proceed.

SUGGESTION:

ANSWER: **Accept Suggestion:** ☐

Previously a much larger section of concete footing within the TJPA limits was removed with a breaker.

The BSE Contractor BBII should determine the property line and the extent that this protrusion from 301 Mission is within the TJPA limits.

If the 3" protrusion is within the TJPA construction limits beyond the property line of 301 Mission the "3-inch lip" should be removed with smaller breaking tools and concrete chipping tools back to the property line limits.

T-0138 **BSE - Unforeseen Timber Pile in Pre Trench Along 301 Mission St. in Zone 4 - Con** **Closed** **05/10/2011** **05/20/2011** **05/12/2011** **Potentially** ☐

From: Webcor Construction LP Nhi Tran **To:** Turner Construction Compan Daphne Faulkner **Answered By:** Adamson Associates, Inc George Metzger

Number	Subject	Status	Date Created	Date Required	Date Answered	Cost Impact	Proceed

Co-Author: Balfour Beatty Infrastructure, Inc. Ural Yal

REQUEST:

Reference Response to RFI #T-0129 [BBI RFI 094] and Specification Section 02 41 01

Using the current, approved means & methods set forth in RFI Response #T-0129, there is an extremely high probability that the vibratory hammer or casing will come into contact with the existing 301 Mission wall. Despite multiple tag lines and attempts to swing away from the wall, BBII cannot guarantee the equipment will not contact the wall.

BBII requests a revised methodology to extract the unforeseen timber piles or to protect the existing wall which will reduce the of damaging the wall at 301 Mission. BBII is willing to meet with the Engineer to discuss and develop this method.

SUGGESTION:

ANSWER: **Accept Suggestion:** ☐

ARUP Response:

As discussed in the May 11, 2011 BSE meeting, Arup, in our response to RFI T-0129, is seeking the Contractor's "best endeavors" at using the casing on the three (3) timber piles furthest west. The remaining seven (7) or so piles to the east of these piles may be pulled directly without casing as long as there is replacement filling of the timber pile void as soon as it is pulled.

The Contractor, TJPA and Arup will observe the Contractor's "best endeavors" to install casing and pull each of the 3 western-most timber piles at a date and time (Friday May 13, 2011 mentioned as the earliest) chosen by the Contractor. Mechanical methods to control and hold the vibratory pile puller away from the wall, as well as any method of pre-protection of the aluminum panel clad corner, are suggested.

5/11/2011 Roger Rothenburger

As discussed in the Wednesday May 11, 2011 BSE meeting, the Engineer (Arup) is seeking (response to RFI T-0129) "best endeavors" to use the casing on the three (3) timber piles furthest west. The remaining seven (7) or so piles to the east of these piles may be pulled directly withou using casing as long as there is replacement filling of the timber pile void as soon as it is pulled.

TJPA is aware of the risk of exterior damage to the 301 Mission Parking Struture at the corner and sides, but weighs the potential for more serious structural damage in the basement around the PG&E vault to be greater risk than the exterior damage.

The work is in accordance with the force account directive CRT-010 for removal of obstructions so the risk becomes part of the cost which TJPA is willing to bear for avoiding potential greater risk of basement structural damage.

(1) At a date and time (Frday May 13, 2011 mentioned

Number	Subject	Status	Date Created	Date Required	Date Answered	Cost Impact	Proceed

as the earliest) chose by the BSE Subcontractor, BBII, TJPA representatives including the Engineer (Arup), Architect (AAI) will observe the BBII "best efforts" to install casing and pull each of the 3 wesrtn most timber piles. Mechanical methods with the excavators or other equipment to control and hold the vibratory pile hammer away from the wall are suggested as well as any method the experienced work crews suggest. An attempt to protect the aluminum panel clad corner by any means is also advisable.

(2) The material for filling the void left by the extracted timber pile needs to be filled by a material which can be drilled by the CDSM shoring equipment. A sand-water solution with some light bonding material (bentonite, 1/8 +/- bag of cement or other suggested material) that is drillable should be submitted by BBII. The CDSM shoring contractor suggestion would be helpful. A strength of 50psi was mentioned in the meeting but the choice belongs to BBII fo their CDSM equipment.

Please determine a date and time for the trial casing installation and to determine the desired CDSM "drillable mix"

T-0138.1 **BSE - Unforeseen Timber Piles in Pre Trench Along 301 Mission St. in Zone 4 - Co** **Closed** **05/20/2011** **05/30/2011** **05/23/2011** **Potentially** ☐

From: Webcor Construction LP Nhi Tran **To:** Turner Construction Compan Daphne Faulkner **Answered By:** Adamson Associates, Inc George Metzger

Co-Author: Balfour Beatty Infrastructure, Inc. Ural Yal

REQUEST:

Reference response to RFI#T-0129, RFI#T-0138, Specification Section 02 41 01 and attached documents

The response to BBII RFI 094 [RFI#T-0129] regarding the unforeseen timber piles along 301 Mission Street, "Concrete to be placed in the remnant pile hole as rapidly as possible after pile removal of the adjacent pile." Concrete is not compatible with CDSM mixing.

After clarification on the issue in RFI Response #T-0138,

SUGGESTION:

ANSWER: **Accept Suggestion:** ☐

ARUP Response:

Mix FOA100CX is acceptable. Contractor shall verify that this mix is acceptable to the CDSM shoring wall installer.

Number	Subject	Status	Date Created	Date Required	Date Answered	Cost Impact	Proceed

BBII proposed and furnished Central Concrete Sand Slurry Mix FOA100CX under the direction of the Engineer. The Engineer of Record's field engineer reviewed, approved and observed the installation of this mix in the pile voids along 301 Mission Street. The mix was recommended by ARUP Field Engineer prior to placement in the field, please confirm that this mix design meets the field engineer¿s requirements.

Attachments: Mix as requested is being submitted for record.

T-0139 **BSE - Unforeseen Timber Pile in Pre Trench Along 301 Mission St. in Zone 4 - CR 1** **Closed** **05/10/2011** **05/20/2011** **05/11/2011** **Potentially** ☐

From: Webcor Construction LP Nhi Tran **To:** Turner Construction Compan Daphne Faulkner **Answered By:** Transbay PMPC Roger Rothenburger

Co-Author: Balfour Beatty Infrastructure, Inc. Ural Yal

REQUEST:

Reference Response to RFI #T-0129 [BBI RFI 094] and Specification Section 02 41 01

Please clarify if the removal of the unforeseen timber piles along 301 Mission Street will be reimbursed by CR T-010.

SUGGESTION:

ANSWER: **Accept Suggestion:** ☐

As discussed in the BSE meeting of Wednesday, May 11, 2011 the removal of the unforseen piles in the CDSM shoring wall pre-trenching along 301 Mission is paid under CRT-010.

T-0140 **BSE - Bridges Submittals** **Closed** **05/12/2011** **05/22/2011** **05/27/2011** **Potentially** ☐

From: Webcor Construction LP Nhi Tran **To:** Turner Construction Compan Daphne Faulkner **Answered By:** URS Corporation David Fyfe

Co-Author: Balfour Beatty Infrastructure, Inc. Ural Yal

REQUEST:

Reference Specification Section 01 53 13

BBII proposes breaking up the bridge submittals to allow submittal fundamental structural drawings and calculations for the bridge, independent of accessories and specialized components necessary for a complete bridge package.

Specifically, the first set of submittals would include Structural drawings and calculations for the bridge structure from the pavement and decking down - piers, cap beams, girders, abutments, and associated

SUGGESTION:

ANSWER: **Accept Suggestion:** ☐

The approval to split the temporary bridge submittal into two submissions is provided subject to the following conditions:

1. Items which are provided in the initial submission shall be designed for all loading to support all features which are deferred. This includes loading attributable to but not limited to the following: operable gates; vehicle barriers; required thickness of pavement for all purposes, added thickness of paving for pedestrian areas, curbs and provisions for slope inducement for

Number	Subject	Status	Date Created	Date Required	Date Answered	Cost Impact	Proceed

connections. Additionally, it will include standard edge railing/barriers.

Follow on coordination submittals will include traffic coordination components, gates, hardware, locking mechanisms, fences, Muni OCS components, utility support details, surface grading and drainage.

BBII believes that it will take some time to finalize a complete bridge package that satisfies all interested parties. Isolating the core bridge structure into it's own submittals will ensure that detailing and fabrication of the main components of the bridge will not be held up while working out the details.

Please confirm this is acceptable

handling of surface water; support for utilities; lighting poles/standards; OCS poles/wires; and any other items specifically required to meet city of SF requirements brought to the attention of the contractor team by review meetings with city staff.

2. Items deferred to the second submission shall be in full conformance with specifications requirements.

3. Any items for which a deviation from the specifications is sought shall be fully identified in the first submission.

T-0141 **BSE - Inclinometers IW-5 to IW-8 Install Locations** **Closed** **05/12/2011** **05/22/2011** **05/16/2011** **Potentially** ☐

From: Webcor Construction LP Nhi Tran **To:** Turner Construction Compan Daphne Faulkner **Answered By:** Adamson Associates, Inc George Metzger

Co-Author: Balfour Beatty Infrastructure, Inc. Ural Yal

REQUEST:

Reference Sheets GT-1301, GT-1302, GT-2201 & 13/GT-5101 and Specification Section 31 56 13

Please clarify if locations IW-5 to IW-8 exist. They are not shown on GT-1301 and GT-1302.

SUGGESTION:

ANSWER: **Accept Suggestion:** ☐

ARUP Response:

Inclinometers IW-5 to IW-8 do not exist.

T-0142 **BSE - Instruments I-104 to I-107** **Closed** **05/13/2011** **05/23/2011** **05/16/2011** **Potentially** ☐

From: Webcor Construction LP Nhi Tran **To:** Turner Construction Compan Daphne Faulkner **Answered By:** Adamson Associates, Inc George Metzger

Co-Author: Balfour Beatty Infrastructure, Inc. Ural Yal

REQUEST:

Reference Sheets GT-1301, GT-1302, GT-2201, & 13/GT-5101 and Specification Section 31 56 13

SUGGESTION:

ANSWER: **Accept Suggestion:** ☐

ARUP Response:

Instruments I-104 to I-107 require detail 13/GT-5101.

Number	Subject	Status	Date Created	Date Required	Date Answered	Cost Impact	Proceed

On Sheet GT-2201, please confirm that Instrument I-104 to I-107 is detail 13/GT-5101.

T-0143 **BSE - Confirmation of Utility Decommissioning and As-Builts for Fremont Street** **Closed** **05/16/2011** **05/26/2011** **05/20/2011** **Potentially** ☐

From: Webcor Construction LP Nhi Tran **To:** Turner Construction Compan Daphne Faulkner **Answered By:** Turner Construction Comp Kevin Chiu

Co-Author: Balfour Beatty Infrastructure, Inc. Ural Yal

REQUEST:

Reference Sheet D-2230 and attached sketch

During BBII potholing work on the Fremont street hammer head, BBII exposed the existing live PG&E concrete duct bank. The duct bank is located under BBII Buttress drill pad (see attached sketch), the drill pad is scheduled to be poured 5-26-2011/5-27-2011. BBII has concerns that the duct bank will not be able to support the load for the drilling equipment. The concrete duct bank will need to be removed prior to drill pad installation. Please advise.

SUGGESTION:

ANSWER: **Accept Suggestion:** ☐

Removal of existing duct bank is in RUP scope, see U-1123. Coordinate BSE work activities with RUP scope. Target date given by PG&E to have duct bank decommissioned is 6/24/11. If RUP's removal of duck bank is not complete prior to drill pad installation, BBI is to protect the existing utilities.

T-0144 **BSE - Unknown Concrete Structure along 199 Fremont St in Zone 4** **Closed** **05/18/2011** **05/28/2011** **05/24/2011** **Potentially** ☐

From: Webcor Construction LP Masashi Kojima **To:** Turner Construction Compan Daphne Faulkner **Answered By:** Turner Construction Comp Kevin Chiu

Co-Author: Balfour Beatty Infrastructure, Inc. Ural Yal

REQUEST:

Reference Specification Section 31 56 13

BBII discovered the unforeseen concrete structure in the attached photo. TIlls concrete mass is unknown and is in direct conflict with the BSE CDSM wall.
The concrete mass is approx 2ft wide and extends 8ft depth the entire between GL J 30-33.5 adjacent 199 Fremont Street building. During the excavation at 8ft there was water egress into the excavation from underneath the concrete structure see photos attached.
BBII requests immediate direction from the TJPA on this issue.

SUGGESTION:

ANSWER: **Accept Suggestion:** ☐

Demolition of underground obstructions shall be per Spec 02-41-01 and Demolition Debris shall be handled in accord with Spec 01-74-00.

5/20/2011 - George Metzger

ARUP Response:

If the CDSM shoring wall is to be installed in the location shown, then the material which is in the way, including any rubble which will interfere with the soil mixing for the CDSM wall, will need to be removed.

Webcor/Obayashi Joint Venture

PROJECT MANAGEMENT - REQUEST AND ANSWERS LOG

30100 - Transbay Transit Center Project

Number	Subject	Status	Date Created	Date Required	Date Answered	Cost Impact	Proceed

Arup requests TJPA to provide direction to the Contractor regarding removal of the obstacles encountered.

T-0145 **BSE - Existing Concrete Footing Gridline J between Gridline 26.5-30 along 181 Fre** **Closed** **05/18/2011** **05/28/2011** **05/20/2011** **Potentially** ☐

From: Webcor Construction LP Masashi Kojima **To:** Turner Construction Compan Daphne Faulkner **Answered By:** Adamson Associates, Inc George Metzger

Co-Author: Balfour Beatty Infrastructure, Inc. Ural Yal

REQUEST:

Reference Specification Section 02 41 00

BBII followed the method approved to remove a section of the unforeseen structure in RFI #74 & 74.1, and found a separate concrete footing bellow that. It is believed to be a footing that extends below the 177/181 Fremont St. building. The top of this footing is approximately 8 feet below the original grade, and it is approximately 3 feet wide, and 3 feet deep.
BBII is concerned with the removal of this footing and the extensive rubble that was exposed below it. When a bucket of dirt was removed along the footing, a large amount of water gushed out, from below the 177/181 Fremont St. building, and through the large amount of stone rubble that was exposed. At this point the bottom of the footing was found, and the soil was quickly replaced. This footing is within the CDSM wall extents, and will have to be removed. Due to the fragile nature, and the age of the 177/181 Fremont St. building; please clearly describe and advise.
Please See Attached Pictures.

SUGGESTION:

ANSWER: **Accept Suggestion:** ☐

ARUP Response:

The RFI refers to RFIs 74 and 74.1. We understand these are BBI numbers; the corresponding RFI numbers in Constructware are 103 and 103.1.

If the CDSM shoring wall is to be installed in the location shown, then the material which is in the way, including any rubble which will interfere with the soil mixing for the CDSM wall, will need to be removed. Based on field observations made earlier today, and recent email correspondence, we understand the concrete (unreinforced) basement wall immediately adjacent to 181 Fremont has been removed. Arup requests TJPA to provide direction to the Contractor regarding any additional demolition and/or excavation should it be necessary.

Adamson Associates, Inc. Comment:

CM (Turner) is to confirm that TJPA approves in writing the approach and work the Contractor proposes at this location as the Field Actives and Contractor actions may impact the adjacent property.

T-0146 **BSE - Additional Timber Piles Adjacent 177/181 Fremont Building South Zone 4** **Closed** **05/19/2011** **05/29/2011** **05/20/2011** **Potentially** ☐

From: Webcor Construction LP Nhi Tran **To:** Turner Construction Compan Daphne Faulkner **Answered By:** Adamson Associates, Inc George Metzger

Co-Author: Balfour Beatty Infrastructure, Inc. Ural Yal

Webcor/Obayashi Joint Venture

PROJECT MANAGEMENT - REQUEST AND ANSWERS LOG

30100 - Transbay Transit Center Project

Number	Subject	Status	Date Created	Date Required	Date Answered	Cost Impact	Proceed

REQUEST:

Reference RFI#T-0103 and attached photo

During BBII demolition of the unknown concrete structure along South side of Zone 4 adjacent 177/181 Fremont building (Refer to [RFI#T-0103] BBII RFI# 74), BBII discovered timber piles beneath the unknown concrete structure - see photos attached.

The location timber piles are in conflict with the alignment of the CDSM wall. Please advise on the method of removal of the obstruction.

Note: BBII has concerns regarding the stability of the adjacent 177/181 Fremont Building (old brick structure).

SUGGESTION:

ANSWER: **Accept Suggestion:** ☐

ARUP Response:

1. We suggest that the timber piles be exposed no more than 3 at a time, and that they are removed and the remnant void is infilled immediately with a material that can be drilled by the shoring wall equipment of DND. A suitable material was proposed for the similar situation adjacent to the parking garage/low rise portion of 301 Mission.

2. If more timber piles are revealed along this part of the pre-trenching, then the process in 2 above should continue along the northern flank of 181 Fremont and for a distance of 20 ft east of the northeast corner of the building.

3. 181 Fremont building is equipped with crack width gauges, and Arup staff will take readings of the gauges before and after removal of the timber piles along this length of pre-trenching provided the building owner grants us access.

4. Inclinometers to monitor the effects of the installation of the shoring wall and the subsequent train box excavation will be installed in due course.

5. The Contractor shall take appropriate measures to retain the material under 181 Fremont and keep it from sloughing into the excavation.

Adamson Associates, Inc. Comment:

CM (Turner) is to confirm that TJPA approves in writing the approach and work the Contractor proposes at this location as the Field Activates and Contractor actions may impact the adjacent property.

T-0146.1	**BSE - Additional Timber Piles Adjacent 177/181 Fremont Building South Zone 4**	**Closed**	**05/20/2011**	**05/30/2011**	**05/20/2011**	**Potentially**	☐

From: Webcor Construction LP Nhi Tran **To:** Turner Construction Compan Daphne Faulkner **Answered By:** Transbay PMPC Roger Rothenburger

Co-Author:

Number	Subject	Status	Date Created	Date Required	Date Answered	Cost Impact	Proceed

REQUEST:

Reference RFI#T-0146

Please provide the TJPA's specific written direction and procedure on how to remove the unforeseen piles along North face of 181 Fremont Street according to the response for RFI T-0146.

The contractor cannot proceed on this extra and critical work without the specific direction and procedure provided in writing by the TJPA.

SUGGESTION:

ANSWER: **Accept Suggestion:** ☐

The Sheet pile method using sheet piles either interlocked or not interlocked for 20 feet or so, removing the piles (3ft of exposed pile required to remove) described to TJPA and its representatives this morning (May 20, 2011) on site is compliant with the Contract Specifications Section 02 41 19 (Pile Removal and Section 31 56 13 (CDSM Shoring Wall) Part 3.2 (Execution - Pre-trenching)

T-0146.2 **BSE - Additional Timber Piles Adjacent 177/181 Fremont Building South Zone 4** **Closed** **05/23/2011** **06/02/2011** **05/24/2011** **Potentially** ☐

From: Webcor Construction LP Nhi Tran

Co-Author: Balfour Beatty Infrastructure, Inc. Ural Yal

To: Turner Construction Compan Daphne Faulkner

Answered By: Turner Construction Comp Kevin Chiu

REQUEST:

Reference RFI#T-0146.1

Based on the joint meeting between W/O, BBII and the TJPA on 5/23/2011, BBII would like to confirm the following:

181 Fremont Street Pile Extraction:
1. BBII will install additional survey control to establish the back of the shoring wall limit.
2. BBII will contact DND Construction to confirm the allowable distance between an existing pile and the back of the shoring wall.
3. BBII will expose, in the presence of the engineer, 3 piles at one time.
4. BBII and the Engineer will jointly determine the piles that can be left in place with reasonable assurance that they will not impact the shoring wall.
5. BBII will install flat sheet piles between the building and the wood piles to prevent caving of soils under the building.
6. BBII will extract the wood piles with vibratory hammer, with the same stroking procedure without steel casing. BBII will perform dewatering enough to be able to connect the hammer to the pile.
7. BBII will backfill the void with low strength material

SUGGESTION:

ANSWER: **Accept Suggestion:** ☐

Per Brian Dykes, this work is authorized to proceed. Allowable work hours will be established after 199 Fremont pile extraction begins.

5/24/2011 - George Metzger

ARUP Response:

The procedure described is consistent with that discussed and agreed to at yesterday's meeting with the following exceptions:

Item 4 shall read: BBI and TJPA will jointly determine the piles that can be left in place with reasonable assurance that they will not impact the shoring wall. Arup will be on site to assist the TJPA.

The Contractor may wish to consider placing the steel sheet prior to excavating to retain the material under 181 Fremont and keep it from sloughing into the excavation.

Items 10 and 11 will be reviewed by others.

Number	Subject	Status	Date Created	Date Required	Date Answered	Cost Impact	Proceed

Central Concrete Mix FOA100CX (RFI #T-0138.1).
8. BBII will backfill the piles.
9. BBII will remove the sheet piles and start over with Step 3.
10. All of this work will be tracked and compensated on force account under CR T-010.
11. Similar to the extraction in front of the 301 Mission garage wall, BBII will take every precaution to avoid damaging the adjacent wall; however, due to the proximity of the hammer to the wall, BBII will not guarantee not damaging the wall. If damage to the adjacent wall occurs in any phase of the pile extraction operation described above, BBII will be compensated for repairs under CR T-010 as well.

Please confirm the above as soon as possible. In addition, BBII requests immediate confirmation of allowable work hours for the work described above.

T-0146.3 **BSE - Additional Timber Piles Adjacent 177/181 Fremont Building South Zone 4** **Closed** **05/23/2011** **06/02/2011** **05/25/2011** **Potentially** ☐

From: Webcor Construction LP Nhi Tran **To:** Turner Construction Compan Daphne Faulkner **Answered By:** Transbay PMPC Roger Rothenburger

Co-Author: Balfour Beatty Infrastructure, Inc. Ural Yal

REQUEST:

Reference RFI#T-0146.2

The response RFI T-0146.2 did not answer for Item 10 and 11. Please respond for Item 10 and Item 11.

RFI#T-0146.2 Question:

Reference RFI#T-0146.1

Based on the joint meeting between W/O, BBII and the TJPA on 5/23/2011, BBII would like to confirm the following:

181 Fremont Street Pile Extraction:
1. BBII will install additional survey control to establish the back of the shoring wall limit.

SUGGESTION:

ANSWER: **Accept Suggestion:** ☐

The row of timber piles closest to 199 Fremont are only 6"-9" clear of the 36-inch theortical CDSM wall thickness. TJPA in order to avoid the potential risk of these timber piles some of whom are canted and not straight pulled if anyy part of the pile is within 12" of the theoretical CDSM wall line. Since this work has previously been classified as an "unknown obstruction" paid on force account; if there is damage to the 199 Masonry wall that the cost of repair is considered part of the force account work. BBII is to exert efforts to avoid damage and use the method of pulling the piles that gives least amount of risk for damage to the masonry wall. This response is only for 199 Fremont. Discussions must be held when starting pile removal along 181 Fremont.

Number	Subject	Status	Date Created	Date Required	Date Answered	Cost Impact	Proceed

2. BBII will contact DND Construction to confirm the allowable distance between an existing pile and the back of the shoring wall.
3. BBII will expose, in the presence of the engineer, 3 piles at one time.
4. BBII and the Engineer will jointly determine the piles that can be left in place with reasonable assurance that they will not impact the shoring wall.
5. BBII will install flat sheet piles between the building and the wood piles to prevent caving of soils under the building.
6. BBII will extract the wood piles with vibratory hammer, with the same stroking procedure without steel casing. BBII will perform dewatering enough to be able to connect the hammer to the pile.
7. BBII will backfill the void with low strength material Central Concrete Mix FOA100CX (RFI #T-0138.1).
8. BBII will backfill the piles.
9. BBII will remove the sheet piles and start over with Step 3.
10. All of this work will be tracked and compensated on force account under CR T-010.
11. Similar to the extraction in front of the 301 Mission garage wall, BBII will take every precaution to avoid damaging the adjacent wall; however, due to the proximity of the hammer to the wall, BBII will not guarantee not damaging the wall. If damage to the adjacent wall occurs in any phase of the pile extraction operation described above, BBII will be compensated for repairs under CR T-010 as well.

Please confirm the above as soon as possible. In addition, BBII requests immediate confirmation of allowable work hours for the work described above.

T-0146.4 **BSE - Additional Timber Piles Adjacent 177/181 Fremont Building South Zone 4** **Closed** **05/27/2011** **06/06/2011** **05/31/2011** **Potentially** ☐

From: Webcor Construction LP Nhi Tran **To:** Turner Construction Compan Daphne Faulkner **Answered By:** Turner Construction Comp Kevin Chiu

Co-Author: Balfour Beatty Infrastructure, Inc. Ural Yal

REQUEST:

Per Turner's request on 5/27/2011 this RFI is being asked, to modify the 177/181 Fremont pile extraction procedure

SUGGESTION:

ANSWER: **Accept Suggestion:** ☐

Item 8 - BBI shall make every attempt to ensure voids are completely filled but is not required to test/verify

Number	Subject	Status	Date Created	Date Required	Date Answered	Cost Impact	Proceed

as desired by ARUP:

Based on the revised proposal for unforeseen pile extraction work along 181 Fremont St. from ARUP, BBII (W/O) can agree with revisions as the follows:
- Item 6 should read, "BBII will extract the piles with vibratory hammer only as necessary. BBII will use as little vibration as possible to remove the piles from the ground. BBII will perform dewatering enough to be able to connect the hammer to the pile."
- Item 8 should read, "BBII will back fill the pile voids using a tremie pipe of minimum length 20ft attached to the concrete bucket. The tremie shall be inserted as far into the pile hole as possible prior to pouring the concrete, and the concrete shall be placed using normal tremie techniques. BBII will make efforts to pour the material into the void as possible, but BBII is not responsible to eliminate void completely."
Other items shall remain the same.

Please also clarify that the response from RFI#T-0146.3 stating "Since this work has previously been classified as an "'unknown obstruction" paid on force account; if there is damage to the 199 Masonry wall that the cost of repair is considered part of the force account work. BBII is to exert efforts to avoid damage and use the method of pulling the piles that gives least amount of risk for damage to the masonry wall." is this instead, meant to address the property and work related to 177/181 Fremont? If not, please address the question regarding 177/181 address.

that the voids are completely filled.

Last paragraph of the RFI - Correct. RFI response from T-0146.3 should read 177/181 Fremont in lieu of 199 Fremont.

5/28/2011 - George Metzger

ARUP Response:

Based on additional observations made 03/27/2011of the pile pulling process adjacent to 199 Fremont, Arup has the following comments and recommends revisions to the procedure as noted below:

Item 6 is acceptable.

Item 8 should be modified to read, "BBII will backfill the voids using gravity fall method immediately after pile is pulled. BBII will accomplish this by having the concrete hopper filled and setup to pour prior to the final pull of the each individual pile, with the hopper's chute aimed at the pile. As soon as the pile is lifted from the void, the concrete is released from the hopper."

The last sentence in Item 8 in the RFI "BBII will make efforts to pour the materials into the void as possible but BBII is not responsible to eliminate void completely," shall be reviewed by the TJPA.

The last paragraph of the RFI shall be reviewed by others.

The Contractor shall not commence pile pulling adjacent to 177/181 Fremont without first receiving direction to do so from TJPA.

T-0147	**301 Mission Wall - Stone Application Detail**	**Closed**	**05/19/2011**	**05/29/2011**	**05/27/2011**	**Potentially**	☐

Number	Subject	Status	Date Created	Date Required	Date Answered	Cost Impact	Proceed

From: Webcor Construction LP David Hungerford **To:** Turner Construction Compan Daphne Faulkner **Answered By:** URS Corporation David Fyfe

Co-Author:

REQUEST:

Reference: Attached Sketch

Please review the attached sketch showing the thinset manufacturer's recommendations for the tile installation at this wall. In reference to the approved submittal detail (attached) an additional layer of cement board will be installed to fur out the substrate so that the materials can be applied to their recommended thickness. In addition, the manufacturer recommends to use Laticrete 254 Platinum thinset material. The stone tiles finished surface will align with the aluminum panel above. Please expedite the review of this RFI.

SUGGESTION:

ANSWER: **Accept Suggestion:** ☐

2nd layer of cement board is not as specified in contract documents.

An adhesive shall be used between the layers of cement board in order to ensure the 2 layers act as a single composite layer. 2nd layer of cement board shall be attached to studs at 6" o.c. with stainless steel flat head screws to metal stud framing. All screws shall extend through both layers of cement board for full engagement to framing. There shall be no gaps or voids between the two layers of cement board.

Use of Laticrete 254 Platinum thinset material is acceptable.

T-0148	BSE - Additional Timber Piles Adjacent 199 Fremont Building Zone 4	Closed	05/23/2011	06/02/2011	05/24/2011	Potentially ☐

From: Webcor Construction LP Nhi Tran **To:** Turner Construction Compan Daphne Faulkner **Answered By:** Turner Construction Comp Kevin Chiu

Co-Author: Balfour Beatty Infrastructure, Inc. Ural Yal

REQUEST:

Reference RFI#T-0146.2

Based on the joint meeting between W/O, BBII and the TJPA on 5/23/2011, BBII would like to confirm the following:

199 Fremont Street Pile Extraction:
1. BBII will install additional survey control to establish the back of the shoring wall limit.
2. BBII will contact DND Construction to confirm the allowable distance between an existing pile and the back of the shoring wall.
3. BBII will excavate, in the presence of the engineer, 8 piles at one time.
4. BBII and the Engineer will jointly determine the piles that can be left in place with reasonable assurance that they will not impact the shoring wall.
5. BBII will extract the piles with vibratory hammer, with the same stroking procedure without steel casing. BBII will perform dewatering enough to be able to connect the hammer to the pile.

SUGGESTION:

ANSWER: **Accept Suggestion:** ☐

Per Brian Dykes, this work is authorized to proceed. 199 Fremont has been notified and work may commence.

5/24/2011 - George Metzger
ARUP Response:

The procedure described is consistent with that discussed and agreed to at yesterday's meeting with the following exceptions:

Item 4 shall read: "BBI and TJPA will jointly determine the piles that can be left in place with reasonable assurance that they will not impact the shoring wall." Arup will be on site to assist the TJPA.

Items 8 and 9 will be reviewed by others.

Number	Subject	Status	Date Created	Date Required	Date Answered	Cost Impact	Proceed

6. BBII will backfill the void with low strength material Central Concrete Mix FOA100CX (RFI #T-0138.1).
7. BBII will backfill the piles and start over with Step 3.
8. All of this work will be tracked and compensated on force account under CR T-010.
9. Similar to the extraction in front of the 301 Mission garage wall, BBII will take every precaution to avoid damaging the adjacent wall; however, due to the proximity of the hammer to the wall, BBII will not guarantee not damaging the wall. If damage to the adjacent wall occurs in any phase of the pile extraction operation described above, BBII will be compensated for repairs under CR T-010 as well.

Please confirm the above as soon as possible. In addition, BBII requests immediate confirmation of allowable work hours for the work described above.

T-0148.1 **BSE - Additional Timber Piles Adjacent 199 Fremont Building Zone 4** **Closed** **05/23/2011** **06/02/2011** **06/07/2011** **Potentially** ☐

From: Webcor Construction LP Nhi Tran **To:** Turner Construction Compan Daphne Faulkner **Answered By:** Turner Construction Comp Jack Adams

Co-Author: Balfour Beatty Infrastructure, Inc. Ural Yal

REQUEST:

Reference RFI#T-0148

The response RFI T-0148 did not answer for Item 8 and 9. Please respond for Item 8 and Item 9.

RFI#T-0148 Questioin:
Reference RFI#T-0146.2

Based on the joint meeting between W/O, BBII and the TJPA on 5/23/2011, BBII would like to confirm the following:

199 Fremont Street Pile Extraction:
1. BBII will install additional survey control to establish the back of the shoring wall limit.
2. BBII will contact DND Construction to confirm the allowable distance between an existing pile and the back of the shoring wall.

SUGGESTION:

ANSWER: **Accept Suggestion:** ☐

Confirmed-In regards to item #8 and 9 in the response to RFI T-0148; All of this work will be tracked on force account under CR T-010. If BBII takes every precaution to avoid damaging the adjacent wall, BBII will be compensated for repairs under CR T-010 as well.

There is no Noise moratorium for 199 Fremont. This includes demolition, pile pulling, excavation, backfill, equipment set-up etc. is allowed at all times adjacent to 199.

Good neighbor notification policy is in effect - WO/BBIi will notify Singer Assoc. whenever work will encroach on 199 Fremont property or when work activity will disrupt the tenants of 199 Fremont - both inside lot and on sidewalk/street.

Number	Subject	Status	Date Created	Date Required	Date Answered	Cost Impact	Proceed

3. BBII will excavate, in the presence of the engineer, 8 piles at one time.
4. BBII and the Engineer will jointly determine the piles that can be left in place with reasonable assurance that they will not impact the shoring wall.
5. BBII will extract the piles with vibratory hammer, with the same stroking procedure without steel casing. BBII will perform dewatering enough to be able to connect the hammer to the pile.
6. BBII will backfill the void with low strength material Central Concrete Mix FOA100CX (RFI #T-0138.1).
7. BBII will backfill the piles and start over with Step 3.
8. All of this work will be tracked and compensated on force account under CR T-010.
9. Similar to the extraction in front of the 301 Mission garage wall, BBII will take every precaution to avoid damaging the adjacent wall; however, due to the proximity of the hammer to the wall, BBII will not guarantee not damaging the wall. If damage to the adjacent wall occurs in any phase of the pile extraction operation described above, BBII will be compensated for repairs under CR T-010 as well.

Please confirm the above as soon as possible. In addition, BBII requests immediate confirmation of allowable work hours for the work described above.

Webcor/Obayashi Joint Venture

PROJECT MANAGEMENT - REQUEST AND ANSWERS LOG

30100 - Transbay Transit Center Project

Number	Subject	Status	Date Created	Date Required	Date Answered	Cost Impact	Proceed
T-0149	**BSE - Revised Contract Drawing GT-2201**	**Closed**	**05/24/2011**	**06/03/2011**	**05/26/2011**	**Potentially**	☐

From: Webcor Construction LP Nhi Tran **To:** Turner Construction Compan Daphne Faulkner **Answered By:** Adamson Associates, Inc George Metzger

Co-Author: Balfour Beatty Infrastructure, Inc. Ural Yal

REQUEST:

Reference Sheet GT-2201, RFI#T-0088.2, and attached sketch SKGT-0002

BBII agreed with the TJPA's proposal in the response of RFI T-0088.2. Therefore, please issue the revised contract drawing of GT-2201.
Also, please note that attached Sketch SKGT-0002 includes an error in the CDSM wall alignment at gridline J/34-35.

SUGGESTION:

ANSWER: **Accept Suggestion:** ☐

Based on the 5/26/2011 meeting between TJPA, PMPC, Turner and AAI, and as directed by TJPA a revised contract drawing of GT-2201 will not be issued at this time. However, the attached sketch has been revised to correctly show the CDSM shoring wall outline. See attached SKGT-0002-R1.

T-0150	**BSE - CDSM Top of Pile Elevations At Zone 4**	**Closed**	**05/25/2011**	**06/04/2011**	**05/31/2011**	**Potentially**	☐

From: Webcor Construction LP Nhi Tran **To:** Turner Construction Compan Daphne Faulkner **Answered By:** Adamson Associates, Inc George Metzger

Co-Author: Balfour Beatty Infrastructure, Inc. Ural Yal

REQUEST:

Reference Sheet GT-5101 and attached sketch

Please reference table 16/GT-5101. To facilitate construction on the streets and the Buttress area, at no additional cost to the owner BBII plans to install the CDSM piles on Fremont St., Beale St., and Zone 4 per the table below:

- (a) Location / Description; (b) Per 16/GT-5101 Top of Pile Elevation; (c) Proposed Top of Pile Elevation

1 - (a) Piles at Fremont St. and Beale St.; (b) EL 13.0 and EL 15.0; (c) Flush to street elevation
2 - (a) Piles in the Buttress Work Pad area along 301 Mission; (b) EL 14.0; (c) Approx. EL 14.0 w/c flush to Top of Pad
3 - (a) Along 301 Mission, piles between the Buttress Work Pad and Beale St.; (b) EL 13.0; (c) Approx. EL 15.0 w/c is 1' above grade
4 - (a) Piles along the 181 Fremont side of Zone 4; (b) EL 14.0; (c) Approx. EL 15.0 w/c is 1' above grade

Please confirm.

SUGGESTION:

ANSWER: **Accept Suggestion:** ☐

ARUP Response:

The proposed top of pile elevations are acceptable provided the elevation at the bottom of the pile is not less than that shown in 16/GT-5101.

Webcor/Obayashi Joint Venture

PROJECT MANAGEMENT - REQUEST AND ANSWERS LOG

30100 - Transbay Transit Center Project

Number	Subject	Status	Date Created	Date Required	Date Answered	Cost Impact	Proceed
T-0151	**BSE - Buttress Footprint Increase Due to Oversized Casing**	**Closed**	**05/26/2011**	**06/05/2011**	**05/31/2011**	**Potentially**	☐

From: Webcor Construction LP Nhi Tran **To:** Turner Construction Compan Daphne Faulkner **Answered By:** Adamson Associates, Inc George Metzger

Co-Author: Balfour Beatty Infrastructure, Inc. Ural Yal

REQUEST:

Reference attached sketch

Becho will be utilizing a 2200mm OD temporary casing for the Buttress Pile Installation. Becho requests that the spacing between tangent piles remain at 4" minimum and the secant piles overlap remain 1'-6". This will approximately increase the Buttress footprint by approximately 4'-4" to the east and 1'-9" to the south.

Please confirm this is acceptable.

SUGGESTION:

ANSWER: **Accept Suggestion:** ☐

ARUP Response:

This is acceptable provided no portion of the overall buttress shifts north-south. In particular, the Contractor shall verify that row R, once shifted east as proposed, can be installed in the same northsouth location, given the corner projection of the 301 Mission low-rise. Contractor to verify that the existing timber piles within the larger footprint have been removed and that the equipment pad is enlarged as necessary.

T-0152	**BSE - Additional Timber Piles Adjacent 199 Fremont Building**	**Closed**	**05/26/2011**	**06/05/2011**	**06/07/2011**	**Potentially**	☐

From: Webcor Construction LP Nhi Tran **To:** Turner Construction Compan Daphne Faulkner **Answered By:** Turner Construction Comp Jack Adams

Co-Author: Balfour Beatty Infrastructure, Inc. Ural Yal

REQUEST:

Reference Sheet GT-2103 and RFI#T-0148

In regards to item #4 in the response to RFI T-0148; field investigations of the curvature in first few piles removed along 199 Freemont, BBII feels that at a minimum it is necessary to remove all piles that's top is within 12" of the "neat line" 36" wide CDSM wall.

Please confirm that removal of these piles to the limits described above, in addition to any associated damage to adjacent structures caused by the extraction will be reimbursed under CR T-010.

Item 4:
4. BBII and TJPA will jointly determine the piles that can be left in place with reasonable assurance that they will not impact the shoring wall.

SUGGESTION:

ANSWER: **Accept Suggestion:** ☐

Confirmed-In regards to item #4 in the response to RFI T-0148; All of this work will be tracked on force account under CR T-010. If BBII takes every precaution to avoid damaging the adjacent wall, BBII will be compensated for repairs under CR T-010 as well.

T-0153	**BSE - Additional Timber Piles Adjacent 177/181 Fremont Building**	**Closed**	**05/26/2011**	**06/05/2011**	**06/07/2011**	**Potentially**	☐

From: Webcor Construction LP Nhi Tran **To:** Turner Construction Compan Daphne Faulkner **Answered By:** Turner Construction Comp Jack Adams

Co-Author: Balfour Beatty Infrastructure, Inc. Ural Yal

REQUEST:

SUGGESTION:

ANSWER: **Accept Suggestion:** ☐

Webcor/Obayashi Joint Venture

PROJECT MANAGEMENT - REQUEST AND ANSWERS LOG

30100 - Transbay Transit Center Project

Number	Subject	Status	Date Created	Date Required	Date Answered	Cost Impact	Proceed

Reference Sheet GT-2103 and RFI#T-0146.2

In regards to item #4 in the response to RFI T-0146.2; field investigations of the curvature in first few piles removed along 199 Fremont, BBII feels that at a minimum it is necessary to remove all piles that's top is within 12" of the "neat line" 36" wide CDSM wall.

Please confirm that removal of these piles to the limits described above, in addition to any associated damage to adjacent structures caused by the extraction will be reimbursed under CR T-010.

Also, please confirm allowable work hours, since 199 extractions have already begun.

Item 4:
4. BBII and TJPA will jointly determine the piles that can be left in place with reasonable assurance that they will not impact the shoring wall.

Confirmed-In regards to item #4 in the response to RFI T-0146.2; All of this work will be tracked on force account under CR T-010. If BBII takes every precaution to avoid damaging the adjacent wall, BBII will be compensated for repairs under CR T-010 as well.

Noise moratorium for 177/181 Fremont is Monday-Friday from 11 am to 2 PM. This includes demolition and pile pulling adjacent to 177/181 only - Excavation, backfill and equipment set-up is allowed at all times adjacent to 177/181.

T-0154 **BSE - Becho Tremie Placement Process** **Closed** **05/26/2011** **05/26/2011** **05/31/2011** **Potentially** ☐

From: Webcor Construction LP Nhi Tran **To:** Turner Construction Compan Daphne Faulkner **Answered By:** Adamson Associates, Inc George Metzger

Co-Author: Balfour Beatty Infrastructure, Inc. Ural Yal

REQUEST:

Reference Specification Section 31 63 29, 3.5.G.4.K

SS31.63.29.3.5.G.4.k states "The tremie discharge end shall be immersed at least 25' in concrete at all times after starting the flow of concrete."

Becho requests concrete tremie embedment to be reduced to 10ft minimum for all piles and 5ft minimum tremie embedment at the secondary pile transition zones between structural and CLSM mix pushing the minimum contaminated structural/CLSM concrete zone at sub grade to +5 foot above sub grade elevation.

Please confirm this is acceptable.

SUGGESTION:

ANSWER: **Accept Suggestion:** ☐

ARUP Response:

This is acceptable. Note that the procedure described pertains to both the primary and the secondary piles, not just the secondary piles as described in the RFI.

Webcor/Obayashi Joint Venture

PROJECT MANAGEMENT - REQUEST AND ANSWERS LOG

30100 - Transbay Transit Center Project

Number	Subject	Status	Date Created	Date Required	Date Answered	Cost Impact	Proceed
T-0155	BSE - Primary Concrete Mix Tolerance	Closed	05/31/2011	06/10/2011	06/03/2011	Potentially	☐

From: Webcor Construction LP Nhi Tran **To:** Turner Construction Compan Daphne Faulkner **Answered By:** Adamson Associates, Inc George Metzger

Co-Author: Balfour Beatty Infrastructure, Inc. Ural Yal

REQUEST:

Reference Specification Section 03 30 01, 1.5.F

BBII, Becho, Central Concrete, W/O, ARUP and Adamson Associates met on Tuesday 5/24/2011 to discuss the results of Buttress Primary Concrete Mix Trial Batches. During this meeting, Central Concrete expressed concern about variability in the Buttress Primary Concrete mix due to slight variations in material and batching. The Buttress Primary Concrete Mix is a very high performance mix and even small variations in the mix constituents can result in significant changes in strength. Please advise how much of a working tolerance is acceptable for the primary buttress concrete mix.

SUGGESTION:

ANSWER: **Accept Suggestion:** ☐

ARUP Response:

The strength of concrete which has been placed in the primary shafts will be considered satisfactory if both of the following requirements are met:

1. Every arithmetic average of any three consecutive strength tests (each test consisting of at least two 6 by 12 in. cylinders or at least three 4 by 8 in. cylinders made from the same sample of concrete) equals or exceeds 2,000 psi.

2. No individual strength test (average of two 6 by 12 in. cylinders or at least three 4 by 8 in. cylinders) falls below 1,800 psi.

Number	Subject	Status	Date Created	Date Required	Date Answered	Cost Impact	Proceed
T-0156	BSE - Primary Concrete Mix 90-Day Compressive Strength	Closed	05/31/2011	06/10/2011	06/03/2011	Potentially	☐

From: Webcor Construction LP Nhi Tran **To:** Turner Construction Compan Daphne Faulkner **Answered By:** Adamson Associates, Inc George Metzger

Co-Author: Balfour Beatty Infrastructure, Inc. Ural Yal

REQUEST:

Reference Specification Section 03 30 01, 1.5.F

Per Specification Section 03 30 01 - 1.5F Trial Batches: "The mixes shall be proportioned to develop a compressive strength of 2,000 psi at 28 days." Per the response to Question TG0300-0262, "The rate of strength gain can be reduced so that the design strength is reached after 28 days but less than 91 days".

Please confirm that the Buttress Primary Shaft Concrete may take up to 90 days to achieve 2,000 psi.

SUGGESTION:

ANSWER: **Accept Suggestion:** ☐

ARUP Response:

The rate of strength gain can be reduced so that the design strength is reached after 28 days but ess than 91 days, provided the Contractor submits test data demonstrating that the mix will reach 2,000 psi at or before 90 days. At a minimum, compressive strength tests of the mix shall be taken at 7, 14, 28, 56 and 90 days. Each test shall consist of a minimum three cast cylinders and a minimum three cores taken from trial batch cubes placed in accordance with submittal TG0300-385.

At shafts C/2, C/4 and C/6 (refer to GT-2201), the mixes shall be proportioned to develop a compressive strength of 2,000 psi at 28 days.

Contractor to submit proposed mixes and corresponding test results for approval prior to their use.

Webcor/Obayashi Joint Venture

PROJECT MANAGEMENT - REQUEST AND ANSWERS LOG

30100 - Transbay Transit Center Project

Number	Subject	Status	Date Created	Date Required	Date Answered	Cost Impact	Proceed
T-0156.1	**BSE - 120 Day Acceptability of Buttress Primary Shaft Concrete**	**Closed**	**04/16/2012**	**04/26/2012**	**04/19/2012**	**Potentially**	☐

From: Balfour Beatty Infrastructure, Inc. Ural Yal **To:** Turner Construction Compan Gary Krutsch **Answered By:** Adamson Associates, Inc George Metzger

Co-Author:

REQUEST:

Reference: 4/12/12 Central Letter

BBII requests that in the event that the Buttress Primary Mix test specimens do not meet the 2,000 psi specified strength of 2,000 psi at 90 days (reference Response to previous RFIs #T-0157.2, and #T-0156), additional cylinders are to be taken and tested at 120 days. During this cooler climate, initial temperature may be impeding overall strength at the required time. Although only a few specimens are suspect of low strengths, Central Concrete is confident that at 120 days, the specimens in question will reach ·the required strength. If this criteria can be accepted for all test specimens at 120 days, this can mitigate any future concerns of suspect low strength.

SUGGESTION:

ANSWER: **Accept Suggestion:** ☐

ARUP Response:

This is acceptable for shaft N-2. For future shafts, we will evaluate on a case by case basis. However, this will require the TJPA to take an additional cylinder at the sampling frequency required in the specfications so that, if the first cylinder tested at 90 days is less than 2,000 psi, there can be three samples tested at 120 days.

Christina Young : Per Turner, the additional cylinder sampling is to be performed by the Contractor's own testing agency.

T-0157	**BSE - Primary Concrete Mix 500 PSI At 7-Days**	**Closed**	**05/31/2011**	**06/10/2011**	**06/03/2011**	**Potentially**	☐

From: Webcor Construction LP Nhi Tran **To:** Turner Construction Compan Daphne Faulkner **Answered By:** Adamson Associates, Inc George Metzger

Co-Author: Balfour Beatty Infrastructure, Inc. Ural Yal

REQUEST:

Reference Specification Section 03 30 01, 2.2.E

BBII, Becho, Central Concrete, W/O, ARUP and Adamson Associates met on Tuesday 5/24/2011 to discuss the results of Buttress Primary Concrete Mix Trial Batches. One of the concerns for the Buttress Primary Concrete is to provide a mix that is able to consistently achieve both 500 psi at 7 days and 2,000 psi at 28 days. The Buttress Primary Concrete Mix is a very high performance mix and even small variations in the mix constituents can result in significant changes in strength. Please advise if it acceptable to allow a working tolerance for the 500 psi requirement at 7 days.

SUGGESTION:

ANSWER: **Accept Suggestion:** ☐

ARUP Response:

The 7 day compressive strength of primary shaft concrete (Type "A" concrete in spec section 03 30 01) shall be 500 psi +/- 200 psi.

T-0157.1	**BSE - PSI Schedule for Buttress Shaft Primary Mix**	**Closed**	**01/13/2012**	**01/23/2012**	**01/18/2012**	**Potentially**	☐

Webcor/Obayashi Joint Venture

PROJECT MANAGEMENT - REQUEST AND ANSWERS LOG

30100 - Transbay Transit Center Project

Number	Subject	Status	Date Created	Date Required	Date Answered	Cost Impact	Proceed

From: Webcor/Obayashi Joint Venture Kirk Nielsen **To:** Turner Construction Compan Gary Krutsch **Answered By:** Webcor Construction LP David Fields

Co-Author:

REQUEST:

To date there are multiple RFI responses that address the scheduled PSI requirements for the primary shaft mix which is resulting in confusion and unnecessary Vela issues. For clarification sake please confirm the following schedule is correct:
1. 300 psi at 7 days pursuant to RFI response T-0157.
2. 2000 psi based on an arithmetic average of tests on or before 90 days pursuant to RFI response T-0155 and T-0156.

SUGGESTION:

ANSWER: **Accept Suggestion:** ☐

RFI is void and answered in RFI T-0157.2

T-0157.2 **BSE - PSI Schedule for Buttress Shaft Primary Mix** **Closed** **01/18/2012** **01/28/2012** **01/18/2012** **Potentially** ☐

From: Webcor/Obayashi Joint Venture Kirk Nielsen **To:** Turner Construction Compan Gary Krutsch **Answered By:** Adamson Associates, Inc George Metzger

Co-Author:

REQUEST:

To date there are multiple RFI responses that address the scheduled PSI requirements for the primary shaft mix which is resulting in confusion and unnecessary Vela issues. For clarification sake please confirm the following schedule is correct:
1. 300 psi at 7 days pursuant to RFI response T-0157.
2. 2000 psi based on an arithmetic average of tests on or before 90 days pursuant to RFI response T-0155 and T-0156.

SUGGESTION:

ANSWER: **Accept Suggestion:** ☐

The cylinder test results will be tracked in Vela as follows:

7 day report: below 300psi: Failure. Add an issue in Vela

28 day report:

below 300 psi: Failure. Keep the issue in Vela open
below 2,000 psi: below specification but within RFI T-0156 guidelines; monitor; if the 7 day break for the same report was less than 300 psi, then the Vela issue stays open; if the 7 day break for the same report was greater than 300 psi, no Vela issue

90 day report:

below 2,000 psi: Failure. Add an issue in Vela

above 3,000 psi: Failure. Add an issue in Vela

Regarding the question of averaging, see response to RFI 155.

Webcor/Obayashi Joint Venture

PROJECT MANAGEMENT - REQUEST AND ANSWERS LOG

30100 - Transbay Transit Center Project

Number	Subject	Status	Date Created	Date Required	Date Answered	Cost Impact	Proceed
T-0157.3	**BSE - PSI Schedule for Buttress Shaft Primary Mix**	**Closed**	**01/19/2012**	**01/29/2012**	**01/23/2012**	**Potentially**	☐

From: Webcor/Obayashi Joint Venture Kirk Nielsen **To:** Turner Construction Compan Gary Krutsch **Answered By:** Arup Kevin Clinch

Co-Author:

REQUEST:

To date there are multiple RFI responses that address the scheduled PSI requirements for the primary shaft mix which
is resulting in confusion and unnecessary Vela issues. For clarification sake please confirm the following schedule is correct:

1. 300 psi at 7 days pursuant to RFI response T-0157.

2. 2000 psi based on an arithmetic average of tests on or before 90 days pursuant to RFI response T-0155 and T-0156.

SUGGESTION:

ANSWER: **Accept Suggestion:** ☐

The cylinder test results will be tracked in Vela as follows:
Below 300 psi at 7 days: fail
Above 300 psi at 7 days: pass
Below 2,000 psi at 90 days: fail
Above 2,000 psi at 90 days: pass
Above 3000 @ 28 days does not conform with the specifications, but this will not be tracked in Vela.
Regarding the question of averaging, see response to RFI 155

T-0158	**301 Mission Wall - Architect of Record**	**Closed**	**06/01/2011**	**06/11/2011**	**06/06/2011**	**Potentially**	☐

From: Webcor Construction LP David Hungerford **To:** URS Corporation David Fyfe **Answered By:** Transbay PMPC Alfred Lau

Co-Author:

REQUEST:

Please clarify who is the registered Architect of Record, for the 301 Mission Interim Screen Wall Project.

SUGGESTION:

ANSWER: **Accept Suggestion:** ☐

URS is the Architect/Engineer of Record per signature and seal affixed to the drawings.

T-0159	**BSE - Unforeseen Obstruction - Timber Piles Within Pre-Trench Limits Zone 3**	**Closed**	**06/02/2011**	**06/12/2011**	**06/06/2011**	**Potentially**	☐

From: Webcor Construction LP Nhi Tran **To:** Turner Construction Compan Daphne Faulkner **Answered By:** Webcor Construction LP Nhi Tran

Co-Author: Balfour Beatty Infrastructure, Inc. Ural Yal

REQUEST:

Reference Sheet D-2212, Specification Section 02 41 01, attached sketch and photo

During Pre-trench, BBII found additional unforeseen timber piles within the pre-trench limits along gridline A, between gridlines 24 & 25.
Per Contract Drawing D-2212 (attached), there should only be a single row of timber piles in conflict with the CDSM wall, although when the area was exposed there are three rows within the CDSM wall limits (see attached photo). These will have to be removed and will be considered extra work.

SUGGESTION:

ANSWER: **Accept Suggestion:** ☐

06/06/2011 - Daphne Faulkner

Response provided by S. Rule of Turner.

Please refer to note on Drawing D-2212 in the upper half between grids 23~26 which states,

"In areas where (N)CDSM wall conflicts with the existing pile caps and piles, remove (E) pile caps and/or piles prior to construction of (N) Transit Center Building CDSM perimeter shoring wall (see Note 3 and 6)."

Number	Subject	Status	Date Created	Date Required	Date Answered	Cost Impact	Proceed

Please advise.

This includes all piles within the CDSM wall footprint.

"Unforeseen Conditions" are covered in Section 00 07 00 (General Conditions) Article 3.05.A.2 and 3.05.A.3 (Unforeseen or Changed Conditions).

Article 3.05.C states,

C. Differing Site Conditions shall not include:

1. All that is indicated in or reasonably interpreted from the Contract Documents or Reference Documents;

2. All that could be seen on Site

3. Conditions that are materially similar or characteristically the same as those indicated or described in the Contract Documents or Reference Documents.

Since Section 31 56 13 discusses both pre-trenching and the removal of timber piles and Bid Item #6 is for the removal of timber piles before the CDSM shoring wall is installed TJPA believes that this work was indicated and will provid payment for it under Bid Item #2, #4, #6, and #7.

There will be no additional payment for the removal of timber piles for the CDSM wall.

T-0159.1 **BSE - Unforeseen Obstruction - Timber Piles Within Pre-Trench Limits Zone 3** **Closed** **06/08/2011** **06/18/2011** **06/27/2011** **Potentially** ☐

From: Webcor Construction LP Nhi Tran **To:** Turner Construction Compan Daphne Faulkner **Answered By:** Turner Construction Comp Kevin Chiu

Co-Author: Balfour Beatty Infrastructure, Inc. Ural Yal

REQUEST:

Reference RFI#T-0159, Sheet D-2212, Specification Section 02 41 19, and attached photos

The Response to RFI#T-0159, appears to have misunderstood the question. Therefore BBII is providing additional information.

SUGGESTION:

ANSWER: **Accept Suggestion:** ☐

The response to RFI T-0159 applies. The contractor shall remove all piles encountered during pre-trench activities.

Per note 7 on D-2212, it was made clear at the time of bid that the actual existing conditions may differ from

Number	Subject	Status	Date Created	Date Required	Date Answered	Cost Impact	Proceed

BBII contends that the lower and smaller diameter piles as indicated in the attached sketch were not shown in either the contract drawings or the reference documents, therefore BBII was un-able to account for the removal of these piles in their bid item prices. These piles meet the general conditions article 3.05A.2 definition of an unforeseen condition, because that quantity of piles encountered exceeds that shown in the bid docs.

Please confirm the removal of the "unforeseen" timber piles in excess of those shown in the drawings, will be tracked and paid under a Force account contract change order similarly as done for Zone 4 pre-trench obstructions.

the information shown on the drawings.

Note 7 on D-2212 states, "Location and depth/thickness of (E) basement slabs, walls and pile caps and location and depth/grouping of (E) piles shown on drawings based on best available information and may vary. [...] These quantities may not represent the actual extents of the entire building and/or ramp structure foundation elements (piles/footings)."

T-0160 **BSE - Timber Piles Not Extracted In Zone 4** **Closed** **06/03/2011** **06/13/2011** **06/16/2011** **Potentially** ☐

From: Webcor Construction LP Nhi Tran **To:** Turner Construction Compan Daphne Faulkner **Answered By:** Turner Construction Comp Jack Adams

Co-Author: Balfour Beatty Infrastructure, Inc. Ural Yal

REQUEST:

Reference CR T-010 and attached summary and sketch

BBII continues to remove unforeseen timber piles along 199 Fremont Street in Zone 4 and soon will commence extraction along 181 Fremont Street.

As of May 31, 2011, BBII has left 7 piles in place as they were estimated to be more than 12" away from the limits of the CDSM shoring wall. In addition, 5 piles were broken during extraction a portion of which were left in place due to their proximity to the adjacent building walls. While these piles also appear to be more than 12" outside the limits of the CDSM shoring wall, due to possible undulations and alignment changes underground, the possibility of these piles encroaching into the CDSM shoring wall area exist.

These piles are not shown on the contract plans and are extracted with extreme caution under the TJPA's direction and prescribed methods, taking the integrity of the adjacent buildings in consideration. Please confirm that it is the TJPA's intention to leave these piles in place.

SUGGESTION:

ANSWER: **Accept Suggestion:** ☐

Contractor is to remove the wood piles adjacent to 199 and 181 Fremont using alternate means and methods. Wood pile can remain along this line if it will not interfere with installation of CDSM wall.

Webcor/Obayashi Joint Venture

PROJECT MANAGEMENT - REQUEST AND ANSWERS LOG

30100 - Transbay Transit Center Project

Number	Subject	Status	Date Created	Date Required	Date Answered	Cost Impact	Proceed
T-0161	**BSE - CDSM Wall Soldier Pile Installation**	**Closed**	**06/03/2011**	**06/13/2011**	**06/06/2011**	**Potentially**	☐

From: Webcor Construction LP Nhi Tran
Co-Author: Balfour Beatty Infrastructure, Inc. Ural Yal
To: Turner Construction Compan Daphne Faulkner
Answered By: Webcor Construction LP Nhi Tran

REQUEST:

Reference Specification Section 31 56 13, 3.13 and attached detail sketch

Is it acceptable to cut a 1.5" diameter hole, 16" from the bottom tip, in the web of the soldier beam pile beams? The purpose of the hole is to aid in securing the tail of the beam to the "dolly" that DND will use to raise the beams into a vertical position.

SUGGESTION:

ANSWER: **Accept Suggestion:** ☐

06/03/2011 - George Metzger

ARUP Response:

This is acceptable.

T-0162	**BSE - Buttress Concrete Test Cylinders**	**Closed**	**06/03/2011**	**06/13/2011**	**06/08/2011**	**Potentially**	☐

From: Webcor Construction LP Nhi Tran
Co-Author: Balfour Beatty Infrastructure, Inc. Ural Yal
To: Turner Construction Compan Daphne Faulkner
Answered By: Adamson Associates, Inc George Metzger

REQUEST:

Reference Specification Section 03 30 01 and attached summary of test results

BBII, Becho, Central Concrete, W/O, ARUP and Adamson Associates met on Tuesday 5/24/2011 to discuss the results of Buttress Primary Concrete Mix Trial Batches (please refer to the attachment for a summary of the test results). The 28-day test results for the 4x8 test cylinders were on average 57% of the core 4" diameter core test results. The 28-day test results for the 6x12 test cylinders were on average 88% of the 4" diameter core test results. The test samples were extracted from the same concrete batches, at the same time and cured in the same manner. BBII believes the difference in compressive strength between the test results may be attributed to the sample size & the resultant heat of hydration which drives the concrete cure rate. BBII also believes that the concrete cores may be more indicative of the actual in-situ concrete strength than the concrete test cylinders.

The Specification Section 03 30 01 - 1.5 F Trial Batches references "concrete cylinders", however it does not specify 4x8 or 6x12 test cylinders.

During the course of the meeting, it was generally agreed upon that 6x12 test cylinders appeared to be a more representative and consistent measure of the Primary Buttress Concrete strength relative to the core samples.

SUGGESTION:

ANSWER: **Accept Suggestion:** ☐

ARUP Response:

Arup believes that there is insufficient information available at this time for the Contractor to draw the conclusions stated in the RFI.

Regarding the question posed in the RFI: Arup's understanding is that there should be little difference between 4x8 and 6x12 cylinders cast, cured and tested under identical conditions and, therefore, it is not essential to limit the TJPA's Testing Agency to one particular cylinder size.

Number	Subject	Status	Date Created	Date Required	Date Answered	Cost Impact	Proceed

BBII has confirmed through CTS that there should be no additional cost in sampling and testing a 4x8 cylinder relative to a 6x12 cylinder.

Therefore, BBII proposes that the 6x12 test cylinders should be used as the basis of acceptance testing both for the Trial Batches and also for future Field Quality Control and Testing for the Primary Buttress Concrete; 4x8 test cylinders should only be used for informational purposes only. Please confirm.

T-0163 **BSE - Hazardous Material Removed From Site Zone 2** **Closed** **06/03/2011** **06/13/2011** **06/06/2011** **Potentially** ☐

From: Webcor Construction LP Nhi Tran **To:** Turner Construction Compan Daphne Faulkner **Answered By:** Webcor Construction LP Nhi Tran

Co-Author: Balfour Beatty Infrastructure, Inc. Ural Yal

REQUEST:

Reference Specification Section 00 03 35, 1.2

During Investigation of Zone 2, BBII discovered potential lead based material existing on site. The specific area of concern is the pedestals on First Street.

Please confirm that all contaminated material (specifically the referenced pedestals) as specified in the specification section 00 03 35 Article 1.2 has been removed and abated by the Demolition Contractor.

BBII is scheduled to remove these pedestals next week and cannot proceed with this critical work until it is confirmed that the site is cleared of lead based materials as required by the Specifications.

The TJPA's attention is directed to the following Section of the Specifications:

SECTION 00 03 35 - EXISTING CONDITIONS:
HAZARDOUS MATERIALS

"1.2 HAZARDOUS MATERIALS REPORTS
A. The TJPA's environmental consultants have surveyed the facility for the presence of various hazardous

SUGGESTION:

ANSWER: **Accept Suggestion:** ☐

06/06/2011 - Kevin Chiu
Hazardous material has been removed from site per the extent of demolition contract drawings for zone 2 - this does not include the "pedestals" in Zone 2. The building and above ground structures were demolished to the extent shown on Demolition contract drawings. Hazardous materials abatement scope was completed within the scope of demolition only. Refer to Demolition Drawings D-1050, D-1051 and D-1073 for representation of limits of structures (specifically the referenced pedestals) demolished and hazardous material abatement.

BSE Contractor to handle remaining demolition and abatement in accord with BSE Spec 00-08-14 Health and Safety Criteria Para 1.2 and 1.3 Lead hazards, BSE Spec. 02-41-01 "Demolition" and BSE Spec. 01-13-50 "Hazardous Materials Procedures."

Number	Subject	Status	Date Created	Date Required	Date Answered	Cost Impact	Proceed

materials. Materials investigated may include asbestos, lead, PCB ballasts, mercury containing lamps, contaminated soils, underground storage tanks, and other hazardous materials. The demolition contractor for the Demolition project (Evans Brothers Inc.) is responsible for removing and abating products containing asbestos, lead, or PCB ballast, and mercury-containing lamps."

T-0164 **BSE - Timber Piles Adjacent 177/181 Fremont Building South Zone 4** **Closed** **06/06/2011** **06/16/2011** **06/06/2011** **Potentially** ☐

From: Webcor Construction LP Nhi Tran **To:** Turner Construction Compan Daphne Faulkner **Answered By:** Webcor Construction LP Nhi Tran

Co-Author: Balfour Beatty Infrastructure, Inc. Ural Yal

REQUEST:

Reference RFI@T-0146.1 [BBI 0104] and attached photo

Per [RFI #T-0146.1] RFI 104 Response, BBII inserted a metal sheet behind the timber piles required to be removed, in the location between 199 and 181 Fremont. The sheet is to hold back the soil in the alley. Due to the close proximity of the timber piles, the sheet location is too close to the timber piles required to be removed from the CDSM Wall Location. The sheet is too close for the pile extractor to attach to the tops of the pile. See Attached Photo.

Please Advise in detail.

SUGGESTION:

ANSWER: **Accept Suggestion:** ☐

06/06/2011 - Roger Rothenburger

The practice of removing the sheet pile was approved by TJPA in the "181 Fremont test" done on Friday June 3rd. The Contractor can remove the metal sheet and expose the piles as necessary with as steeply a sloped excavation that allows the vibrator pile puller to be attached. The work should be done in as reasonably a short duration as possible. All equipment, manpower, materials should be at hand when the metal sheet is pulled and the piles are exposed for extraction.

T-0165 **BSE - High pH Water Found In Zone 3 Pre-Trenching** **Closed** **06/07/2011** **06/17/2011** **06/10/2011** **Potentially** ☐

From: Webcor Construction LP Nhi Tran **To:** Turner Construction Compan Daphne Faulkner **Answered By:** Turner Construction Comp Daphne Faulkner

Co-Author: Balfour Beatty Infrastructure, Inc. Ural Yal

REQUEST:

Reference Specification Section 00 08 13, 1.9.C

BBI found high pH water while digging an exploratory hole in the Fremont St. side of Zone 3. This was confirmed by Peter Cusack from Treadwell & Rollo. Specification Section 00.08.13.1.9.C states that "Should the existing wastewater be contaminated, or should it be

SUGGESTION:

ANSWER: **Accept Suggestion:** ☐

Pending approval by the TJPA, a CR will be issued for the chemicals to treat the water per specification section 00 08 13 (1.9.B).

Number	Subject	Status	Date Created	Date Required	Date Answered	Cost Impact	Proceed

uncontaminated but subsequently become contaminated as a result of conditions other than the Contractor's operations, a Change Order will be issued..".

Please consider this as a Notice of Existing Contaminated Wastewater as defined by SS00.08.13.1.9.C. Please advise on how to proceed.

T-0166 **BSE - Unknown Concrete Structure at 199 Fremont Zone 4 (Gridline 33-30)** **Closed** **06/07/2011** **06/17/2011** **06/22/2011** **Potentially** ☐

From: Webcor Construction LP Nhi Tran **To:** Turner Construction Compan Daphne Faulkner **Answered By:** Transbay PMPC Roger Rothenburger

Co-Author: Balfour Beatty Infrastructure, Inc. Ural Yal

REQUEST:

Reference RFI#T-0144 (BBI RFI 0103), Specification Section 31 56 13, and attached Turner Field Condition Report 056 and photos

BBII demolished the Unforeseen Concrete Structure along 199 Fremont St., and associated curb per RFI #103 [RFI#T-0144] response. During the process, due to the previous contractor's construction means, the curb inadvertently damaged the metal flashing, and possibly the waterproofing beside it.

Along with the curb, the fence panel was built on top of the Unforeseen Concrete Structure, so when the structure was removed, the fence came down too.

See attached pictures and Turner Field Condition Report (5/24/11)

BBII requests immediate direction from the TJPA on this issue.

SUGGESTION:

ANSWER: **Accept Suggestion:** ☐

Instructions for this were orally transmitted in the field and complied with by the BSE Contractor. The fence between the buildings 199 Fremont and 181 Fremont has been reinstalled. Repair of the curb and flashing can wait until work in the area is complete or at a point that no further damage is possible. The Contract requires that the BSE Contractor repair damage to any building damaged during construction activity for the site and this Contract.

T-0166.1 **BSE - Unknown Concrete Structure at 199 Fremont Zone 4 (Gridline 33-30)** **Closed** **07/20/2011** **07/30/2011** **07/26/2011** **Potentially** ☐

From: Webcor Construction LP Nhi Tran **To:** Turner Construction Compan Gary Krutsch **Answered By:** Transbay PMPC Roger Rothenburger

Co-Author: Balfour Beatty Infrastructure, Inc. Ural Yal

REQUEST:

SUGGESTION:

ANSWER: **Accept Suggestion:** ☐

Number	Subject	Status	Date Created	Date Required	Date Answered	Cost Impact	Proceed

Reference RFI #T-0144, RFI #T-0166 and Specification 31 56 13

Per the response to RFI#T-0166 (BBI RFI 103.1), please provide an acceptable repair procedure for the 199 Fremont building. Also, please confirm that the repair work will be included in CR T-010.

No action is required by the contractor at this time.

The specific damage to 199 Fremont Street has not been listed in the RFI. TJPA is aware of minor damage to the metal flashing along the curb at the bottom of 199 Fremont St and the removal of the unreinforced "curb" that ran along the base of the cinder block wall. As stated previously repairs to 199 Fremont will be made at a much later date. The damage that occurred to the flashing and unreinforced concrete curb resulted from using breaker on the unreinforced foundation wall and pulling the sections out and repairs will not be done until the project is further along in progress where no more likely damage will occur.

T-0167 **Survey Grid Control Documents** **Closed** **06/08/2011** **06/10/2011** **06/20/2011** **Potentially** ☐

From: Webcor Construction LP Tim Maxwell **To:** Transbay Joint Powers Authoı Edmond Sum **Answered By:** Adamson Associates, Inc George Metzger

Co-Author:

REQUEST:

Reference RFI T-0112.1 and drawing GT-0100

As requested by Ed Sum in today's (6/8/11) OAC meeting we submit the following question:

Please confirm that gridlines as established from the GT-0100 and as confirmed on Chaudhary & Associates Survey Grid Control Documents (Ref: RFI T-0112.1) can be used for all future construction elements (i.e., CDSM wall, etc). Please confirm by 6/10/11.

SUGGESTION:

ANSWER: **Accept Suggestion:** ☐

ARUP Response:

For the purpose of laying out the work shown in the BSE package, the layout drawing provided by Chaudry (included in RFI T-0112.1) is acceptable.

T-0167.1 **Survey Grid Control Documents** **Closed** **07/01/2011** **07/11/2011** **07/05/2011** **Potentially** ☐

From: Webcor Construction LP Daniel Foudy **To:** Turner Construction Compan Daphne Faulkner **Answered By:** Adamson Associates, Inc George Metzger

Co-Author:

REQUEST:

Please provide City Survey of property lines with a

SUGGESTION:

ANSWER: **Accept Suggestion:** ☐

ARUP Response:

Number	Subject	Status	Date Created	Date Required	Date Answered	Cost Impact	Proceed

translation to grid for our use.

The City's property line survey has been provided to the Contractor and GT-0100 ties the building grid to the survey.

T-0168 **BSE - Soil Classification Data** **Closed** **06/08/2011** **06/18/2011** **06/22/2011** **Potentially** ☐

From: Webcor Construction LP Nhi Tran

Co-Author: Balfour Beatty Infrastructure, Inc. Ural Yal

To: Turner Construction Compan Daphne Faulkner

Answered By: Transbay PMPC Roger Rothenburger

REQUEST:

Reference Specification Section 01 13 50

The Class 1 and Class 2 Disposal site does not want to use the old "PSI for Caltrans" Reports in the Soil Profile, due to the lack of necessary tests, missing pages in the report, and age.

The Disposal site recommends the use of the Treadwell & Rollo reports from 2008 and 2009, and to dismiss the "PSI for Caltrans" reports.

Please Advise.

SUGGESTION:

ANSWER: **Accept Suggestion:** ☐

Contract Specification Section 01 13 50 Part 1.1.C (General Summary - Soils Management) requires that the Contractor use "Site Mitigation Plan, Transbay Transit Center" by Treadwell and Rollo March 24, 2010 for "...the management of existing soils in a manner consistent with the reuirements of the Contract." This report is attached as Appendix A in Specification Section 01 13 50.

Section 01 13 50 Par 1.1.C for soils management also references a 2nd Treadwell and Rollo Report, "Environmental Site Characterization, Transbay Terminal, San Francisco California April 2009" that is referenced in Specification Section 00 03 35 (Existing Conditions Hazardous Materials Reports). This report is not a part of the Contract as stated in Section 00 03 35 is not part of the Contract except for the technical data incorporated by reference into the Contract.

A partial review of this document shows that there is nothing to require that the Contractor use "PSI for Caltrans" reports. The April 2009 Treadwell and Rollo report is basically a detailed data report which predates the March 2010 report "Site Mitigaiton plan, Transbay Transit Center".

The March 2010 Treadwell and Rollo document modified by any additional data in the 600page April 2009 Treadwell and Roll report should be used to

Number	Subject	Status	Date Created	Date Required	Date Answered	Cost Impact	Proceed

manage the soils being excavated and coordination with the Class 1 and Class 2 Disposal Sites.

T-0169 **BSE - Disposal of Drilling Spoils** **Closed** **06/09/2011** **06/19/2011** **07/07/2011** **Potentially** ☐

From: Webcor Construction LP Nhi Tran **To:** Turner Construction Compan Daphne Faulkner **Answered By:** Transbay PMPC Roger Rothenburger

Co-Author: Balfour Beatty Infrastructure, Inc. Ural Yal

REQUEST:

Reference Specification Section 01 13 50

BBII is concerned of the close proximity of the differently classified layers within the Buttress Area of Zone 4. The concern is during Drilling & Shaft Excavation, cross contamination of the material could potentially lead to Class 1 Material inadvertently going to a Class 2 Disposal site, or even a clean waist site. The class 1, the class 2, and the clean material layers are described below:

Surface to GL-11 ft --- Land fill (clean material except for Equipment Pad Concrete)
GL-11 ft to GL-13 ft --- Class II (based on Spec 01 13 50/APA)
GL-13 ft to GL-16 ft --- Class I (based on Spec 01 13 50/APA)
GL-16 ft to bottom ---Clean Material

BBII is concerned that due to the process of excavating the soil out of the Buttress Shaft with large amount of water and the use of a clam shell digging attachment, that the soil layers have a high opportunity of mixing within the casing. Presumably the mixed the soil layers will make it difficult to distinguish between the class 1, the class 2, and the clean materials.

BBII requests the engineer to provide a revised stratum classification that is better for the actual shaft excavation methods being used, that will prevent cross contamination.

Please Advise.

SUGGESTION:

ANSWER: **Accept Suggestion:** ☐

Conract Specification 01 13 50 Part 1.1.C (General Summary - Sil Management) requies the Contractor to use the Treadwell and Rollo March 24, 2010 "Site Mitigation Plan, Transbay Tranit Center" and April 2009 "Environmental Site Characterization, Transbay Terminal" reports for managing existing soil disposal.

Only the March 24, 2010 Treadwell and Rollo report is a Contract Document in Appendix A of Section 01 13 50 and only data from April 2009 Treadwell and Rollo Report is included as Contract information even though both reports contain much of the same language. The April 2009 report is 600 pages and the March 2010 report is considerably shorter and condensed.

Section 01 13 50 requires the Contractor to submit a material handling plan for each type of excavation operation on the site and includes the buttress piles as well as CDSM overflow materials, pre-trench excavation material, bulk excavation material, etc.

Both the April 2009 and March 2010 Treadwell and Rollo report give the expected ground condition classifications as:

5~16 feet (below grade) fill material composed of loose to medium dense silty sand with varying amounts of brick, wood, tar, and glass fragments.
15~18 feet (below grade) fill material composed of medium dense to very dense sand with variable amutns of silt
18~55 feet (below grade) Bay Mud
Under Section 01 13 50 Part 1.5.G the Contractor is

Number	Subject	Status	Date Created	Date Required	Date Answered	Cost Impact	Proceed

resonsible for devleoping a plan that reduces the amount of hazardous waste generated. This plan also includes (Part 1.4.C Submittals - Excavation Handling) methods, means, equipment, sequences that segreegates the material to reduce cost of hazardous material disposal.

Since the buttress pile area was excavated to remove piles and backfilled with a combination of existing clean material (fine sand with silt) and crused concrete debris and poured concrete (top 2 feet buttress pile working pad) the Contractor needs to devise and submit the methods to handle the segregation of those materials for disposal in the appropriate Class land fills.

The Contractor will need to test materials for suitability and work out a plan with the Disposal Landfill Operators. TJPA will assist with the TJPA environmental consultant, Treadwell and Rollo but it is the Contractor's responsibility to mke the plan and handle the material. Classification of excavated materials by TJPA will not always govern how the disposal operators deal with the material. The actual conditon of the material must be determined prior to disposal.

The materials listed by elvation in the RFI are presumably the levles of CLSM, crushed concrete debris and the material below. The buttress area was excavated to a minimum of 12 feet below grade at the Fremont St. shoring wall and then another 3~5 feet was excavated to grab on to the timber piles for removal. The excavated material was replace with different materials when the engineered work pad was constructed with compacted material.

This means that the material is not necessarily class I as stated in the RFI or as designated in the Treadwell and Rollo March 2010 report. Whether the land fill operators will agree with that is the open question.

However, as stated in Section 01 13 50 it is up to the BSE Contractor to test and determine the disposal of material in accordance with the Contract.

Number	Subject	Status	Date Created	Date Required	Date Answered	Cost Impact	Proceed

TJPA will assist with some testing by their outside environmental consultant Treadwell & Rollo but such testing does not erelieve the Contractor of the responsibility for the means and methods of proper disposal despite TJPA being the "generator" of the material.

T-0170 **BSE - Existing 3" minus Concrete Rubble** **Closed** **06/20/2011** **06/30/2011** **06/29/2011** **Potentially** ☐

From: Webcor Construction LP Nhi Tran **To:** Turner Construction Compan Daphne Faulkner **Answered By:** Turner Construction Comp Jack Adams

Co-Author: Balfour Beatty Infrastructure, Inc. Ural Yal

REQUEST:

Reference Drawing Sheets GT-1303, D-5100, D-5101, D-5102, D-5103, response to Pre-Bid RFI #TG0300-014, and attached drawing

Contract drawings GT-1303, D-5100, D-5101, D-5102, and D-5103 along with the response to Pre-Bid RFI #TG0300-014 describe the finish grades and subsequent quantities of crushed 3" minus concrete to be left on site for the BSE package. In summary, Zone 4 was to be left with a depression as shown on GT-1303 and Zone 1-3 were to be left no higher than existing ground elevations.

Previous discussions between BBII, W/O, EBI and TJPA were made to accommodate BBII's early access into Zones 1-3 for pre-trenching. At the time of these discussions EBI indicated they were short approximately 7000 cy of balancing the site and that they would not be able to get that remaining 7000 cy until the existing ramps were demolished. As a result of the short term shortage and in exchange for access to zone 1-3 BBII agreed to:

- Allow EBI to leave Zone 3 low of the Existing elevations
- Allow EBI to set up Crusher in Zone 2 for ramp demolition
- Allow EBI to leave the 7000 cy shortage in a stockpile in Zone 2, for our later use.

BBII appreciated the partnering agreement however the current size of the stockpile is far greater than BBII ever expected. BBII surveyed the stockpile and the Zone 3

SUGGESTION:

ANSWER: **Accept Suggestion:** ☐

Intent of the demolition project is to retain processed construction demolition concrete onsite for use as buttress fill material and provide a working platform for construction of new terminal perimeter wall.

Contract drawings state" Subsequent to placement of CDSM wall perimeter shoring remove all onsite crushed/processes demolition concrete backfill." REF: D-2200-2203 inclusive, and D-1001 Note 2.

The amount of crushed concrete (and asphalt) is from the demolition contract is in accord with Demolition Contractor drawings and specs. REF: Demo Spec. 02-42-00.

Number	Subject	Status	Date Created	Date Required	Date Answered	Cost Impact	Proceed

depression on 6/7/11 after they completed their export to zone 4 and BBII estimates the size of the concrete stockpile to be in excess of 11,000 cy (this does not include the asphalt stockpile that was created after the survey).

Based on BBII's calculations (see attached topo) Zone 3 was left approximately 2000 cy short of existing grade and 5000 cy were taken from the stockpile to Zone 4. As a result BBII requests the current stockpile be removed in its entirety from the site, as it is in excess of the contractual amount to be removed by the BSE contract.

However, If acceptable to TJPA, BBII would be interested in taking 2000 cy of the crushed concrete if it could be delivered and stockpiled in an mutually agreeable staging area. BBII suggests Lot S. This material would then be used as need for excavation stabilization throughout the BSE contract.

T-0171 **BSE - Concrete Section Protruding Into CDSM Shoring Wall Area Zone 4** **Closed** **06/13/2011** **06/23/2011** **06/17/2011** **Potentially** ☐

From: Webcor Construction LP Nhi Tran **To:** Turner Construction Compan Daphne Faulkner **Answered By:** Transbay PMPC Roger Rothenburger

Co-Author: Balfour Beatty Infrastructure, Inc. Ural Yal

REQUEST:

Reference attached photo

While excavating a pile next to 181 Fremont Street, a section of concrete that was protruding into the CDSM shoring wall area fell from the foundation wall of 181 Fremont. Please advise on how to proceed.

SUGGESTION:

ANSWER: **Accept Suggestion:** ☐

The void should be filled with 2000 psi concrete after surfaces of the opening are cleaned. In addition grouted anchorage of #3 rebar hooks at 12'' c.c around the opening in the existing concrete basement wall and mesh is required before placing repair concrete through a ''bird's mouth'' form for a complete filling. A sketch is attached showing the desired configuration of the repair patch.

Cost to be tracked under CRT#10.

T-0172 **LEED Submittal Requirements** **Closed** **06/13/2011** **06/23/2011** **06/21/2011** **Potentially** ☐

From: Webcor Construction LP Joanne Filipas **To:** Turner Construction Compan Daphne Faulkner **Answered By:** Adamson Associates, Inc George Metzger

Co-Author:

Number	Subject	Status	Date Created	Date Required	Date Answered	Cost Impact	Proceed

REQUEST:

Ref Spec Section 01 81 13 Section 1.5:

According to spec section 018113.1.5, LEED submittals shall be submitted in addition to other submittal requirements specified elsewhere. If a submitted item is identical to an item submitted to comply with other requirements, a duplicate copy is to be submitted. In effort to minimize duplicate submittals, please confirm it is acceptable to issue one submittal package to cover both the technical spec. and LEED spec section requirements.

SUGGESTION:

ANSWER: **Accept Suggestion:** ☐

We agree with your proposal to combine the data.

T-0173 **BSE - Enhanced Trial Batch Testing** **Closed** **06/13/2011** **06/23/2011** **06/15/2011** **Potentially** ☐

From: Webcor Construction LP Nhi Tran

Co-Author: Balfour Beatty Infrastructure, Inc. Ural Yal

To: Turner Construction Compan Daphne Faulkner

Answered By: Adamson Associates, Inc George Metzger

REQUEST:

Reference Specification Section 03 30 01, 2.2.E and attached mix designs

BBII, Becho, Central Concrete, W/O, ARUP and Adamson Associates met on Tuesday 5/24/2011 to discuss the results of Buttress Primary Concrete Mix Trial Batches. Based upon the preliminary results of the 2nd Trial Batch, BBII proposes to submit the following three mixes for approval for use on the Buttress Primary Shaft Concrete:

1. Mix 1: 85AEC3B6
2. Mix 5: 86AEC3A6
3. Mix 7: 87AEC3A6

BBII believes that having additional mixes available for use as the Buttress Primary Concrete would be of great benefit to the Project. BBII proposes "enhanced testing" of these three mixes as well as three additional hybrids of each mix for a total of nine mixes (please see attached for mix designs). The intent of the enhanced testing is to further refine the information we currently have on all three of the above three mixes, as well develop additional mixes for future use as Primary Shaft Concrete.

One of the concerns of 1st and 2nd Trial Batches was potentially accelerated curing due to the Styrofoam

SUGGESTION:

ANSWER: **Accept Suggestion:** ☐

ARUP Response:

This is acceptable.

Number	Subject	Status	Date Created	Date Required	Date Answered	Cost Impact	Proceed

insulated boxes in which the trail batch "cubes" were cast. BBII proposes a 3rd trial batch using all of the same methodology of the approved trial batch method placing, the only exception being that the concrete will be cast into +/- 5'x5'x4' deep excavations in lieu of the Styrofoam insulated forms. Each mix would be placed in an individual excavation, lined with plastic to retain moisture. All other aspects of the proposed trial batch methodology would be as previously submitted & approved.

The results of the "enhanced testing" would be evaluated and possibly submitted for approval as additional Buttress Primary Shaft Concrete Mixes.

Please confirm that this is acceptable.

T-0174 **301 Mission Wall - New Curb Detail** **Closed** **06/14/2011** **06/24/2011** **06/20/2011** **Potentially** ☐

From: Webcor Construction LP David Hungerford **To:** Turner Construction Compan Daphne Faulkner **Answered By:** URS Corporation David Fyfe

Co-Author:

REQUEST:

Reference: Attached sheet C-5000

The required curb details are not clearly defined. Is new curb set atop finish pavers, onto topping slab, or set all the way down to structural slab. Additionally, provide all applicable rebar details to match condition.

SUGGESTION:

ANSWER: **Accept Suggestion:** ☐

New concrete curb shall be placed on top of topping slab and shall extend 9 inches above top of pavers. See attached detail for reinforcement. Concrete mix used for new concrete curbs shall be according to RFI T-0176.

T-0175 **301 Mission Wall - Concrete Mix for Curb Around Existing Manhole Covers** **Closed** **06/15/2011** **06/25/2011** **06/20/2011** **Potentially** ☐

From: Webcor Construction LP David Hungerford **To:** Turner Construction Compan Daphne Faulkner **Answered By:** URS Corporation David Fyfe

Co-Author:

REQUEST:

Reference drawing C-2000

The existing curb around the manholes at the east and west ends of the 301 Mission Wall is unknown. Design documents do not provide information as to the specs of

SUGGESTION:

ANSWER: **Accept Suggestion:** ☐

New concrete finish shall match existing concrete finish. Contractor shall provide concrete mix designs for curb(s) and walkway(s) based on specification as follows;

Number	Subject	Status	Date Created	Date Required	Date Answered	Cost Impact	Proceed

this concrete mixture. The existing concrete appears to have a color added to the mix design. Please provide a mix design and color specification (if necessary) to use at these locations.

Concrete Mix, Design and Testing: Design the mix to produce standard weight concrete consisting of Portland cement, aggregate, air-entraining admixture and water to produce the following properties:

Compressive Strength: except as noted below, four thousand five hundred (4500) psi, minimum at twenty-eight (28) days, with a water cement ratio not to exceed 0.45 by weight.
Slump Range: Two (2) inches to Four (4) inches.
Air Content: Five (5) to seven (7) percent.
Mixed shall be design to provide concrete with the following properties:

Location	Maximum Size of Aggregate	Min. 28 Day Strength (psi)	Min Sacks of Cement/cu. Yd.
Concrete Curb	¾"	3000	6
Concrete Walkways	¾"	2500	5-1/2

Integral Color: Sidewalk shall be constructed of a dark grey, Hi-Con at 5 lbs. per cubic yard carbon black based concrete finish, with 25 to 30 lbs per 100 square feet of silicon carbide sparkle grains.

Contractor shall submit mix design (including integral color) for review and acceptance by the TJPA Representative prior to placing concrete.

Contractor shall provide sample of new concrete to ensure that it matches with existing concrete prior to placing new concrete.

T-0176	**301 Mission Wall - Fill Pour Back and New Curbs**	**Closed**	**06/15/2011**	**06/25/2011**	**06/20/2011**	**Potentially**	☐

From: Webcor Construction LP David Hungerford **To:** Turner Construction Compan Daphne Faulkner **Answered By:** URS Corporation David Fyfe

Number	Subject	Status	Date Created	Date Required	Date Answered	Cost Impact	Proceed

Co-Author:

REQUEST:

Should the concrete mix design for the fill pour back and 9"x12" curbs along the north side of the 301 Mission wall be the same mix that is used for the new curb around the manhole? The mix design for curbs around the existing manhole was requested in RFI T-0175. Please advise.

SUGGESTION:

ANSWER: **Accept Suggestion:** ☐

Concrete mix design for new concrete curbs shall be as specified in RFI T-0175.

Finished concrete curbs shall match existing concrete curb finish.

Contractor to submit concrete mix design to TJPA Representative for review and acceptance prior to placing concrete.

T-0177	BSE - Alternate Method Of Pile Removal Along 181 Fremont	Closed	06/15/2011	06/25/2011	06/16/2011	Potentially ☐

From: Webcor Construction LP — Nhi Tran
To: Turner Construction Compan — Daphne Faulkner
Answered By: Turner Construction Comp — Jack Adams
Co-Author: Balfour Beatty Infrastructure, Inc. — Ural Yal

REQUEST:

Reference attached procedure, photos, and sketch

During the extraction of unforeseen piles along 181 Fremont, two piles located inside the proposed CDSM wall broke and are now too deep to extract under using the current extraction method. During the attempted extraction of pile 151, the pile continued to break. The top of this pile is approximately 9' below the base of the foundation wall. Considering the length of the adjacent removed piles, there is approximately 6' left to be removed. Pile 105 is approximately 6' below the base of the foundation wall leaving approximately 12'-14' to be removed. Further excavation to expose these piles is not reasonable. BBII proposes to drill the remainder of each pile out. See below the proposed procedure as per committee meeting and consultation with Viking Drillers Inc. on 6-15-11. It was agreed that this work will be charged to CR T-010. Also attached are photos and a drawing indicating the location of both broken piles (105 and 151).

Please provide direction.

SUGGESTION:

ANSWER: **Accept Suggestion:** ☐

Confirmed - Method of pile removal is acceptable. CR T-010 is used to document work.

T-0178	BSE - Connector Wall Layout	Closed	06/16/2011	06/26/2011	06/21/2011	Potentially ☐

Number	Subject	Status	Date Created	Date Required	Date Answered	Cost Impact	Proceed

From: Webcor Construction LP Nhi Tran **To:** Turner Construction Compan Daphne Faulkner **Answered By:** Adamson Associates, Inc George Metzger

Co-Author: Balfour Beatty Infrastructure, Inc. Ural Yal

REQUEST:

Reference RFI#T-0151 and Sheets GT-2103 and GT-2201

Per the Engineer's response to RFI#T-0151, it is acceptable to expand the overall Buttress 4'-4" to the east. Please advise if the CDSM connector columns can still be installed per contract drawings GT-2103 and GT-2201.

SUGGESTION:

ANSWER: **Accept Suggestion:** ☐

ARUP Response:

This is not acceptable. If the Contractor wishes to increase the spacing of the drilled shafts, then the connector columns will need to shift and / or be supplemented with additional columns to provide CDSM material for the full width of the buttress.

T-0179 **301 Mission Wall - Detail at Steel Baseplates on South Side** **Closed** **06/21/2011** **07/01/2011** **07/11/2011** **Potentially** ☐

From: Webcor Construction LP David Hungerford **To:** Turner Construction Compan Daphne Faulkner **Answered By:** URS Corporation David Fyfe

Co-Author:

REQUEST:

"Reference drawing D/A-6000 and attached sketch

Detail D/A-6000 does not provide a plywood panel termination detail at the steel baseplate locations along the south side of the 301 Mission wall. At the locations of the steel baseplates, use of sealant and backer rod would leave the steel baseplate exposed (see attached sketch). Please advise."

SUGGESTION:

ANSWER: **Accept Suggestion:** ☐

It is noted that the contractor has already installed flashing to protect steel base plate prior to this RFI response. Although installation of flashing is not specified in contract documents this means of protecting the steel base plate is acceptable.

T-0180 **BSE - CDSM Wall Tolerance** **Closed** **06/22/2011** **07/02/2011** **06/22/2011** **Potentially** ☐

From: Webcor Construction LP Nhi Tran **To:** Turner Construction Compan Daphne Faulkner **Answered By:** Transbay PMPC Roger Rothenburger

Co-Author: Balfour Beatty Infrastructure, Inc. Ural Yal

REQUEST:

Reference Specification Section 31 56 13

As requested by the TJPA, DND submits this request to modify the horizontal tolerance for the CDSM shoring wall. The new goal is to set the wall 2" outside of the original planned centerline of shoring wall. This solution has been proposed by the TJPA in order to not encroach into the structure at the bottom of the train box.

DND respectfully requests the maximum soldier pile & CDSM wall tolerances be revised to 0 inches into the

SUGGESTION:

ANSWER: **Accept Suggestion:** ☐

TJPA did not request this RFI. TJPA stated that if the Contractor was concerned about meeting the tolerances for top horizontal position of the CDSM shoring wall that the Contractor should submit an RFI and TJPA would support such a request in order to avoid any encroachment of the CDSM shoring wall with the Transit Box concrete structure which would be difficult to remediate.

TJPA has no objection in the horizontal setting of the CDSM shoring wall if the horizontal tolerance is 0"

Number	Subject	Status	Date Created	Date Required	Date Answered	Cost Impact	Proceed

trainbox & up to 5 inches outside the trainbox.

There will be no additional excavation and/or bracing costs associated with this increase in tolerance from BBI. However; there may be future additional cost impacts to the Structural Concrete & Waterproofing that are to be handled in future trade packages.

Please confirm, if this is acceptable.

towards the TTC box structure and 4" away from the box structure. The verticality tolerances of 1/150 (CDSM wall) and 1/200 (steel beam) remain in place.

The 4" top horizontal tolerance away from the wall will allow at 1/150 in 55 feet a near 0" clearance at the invert level with the CDSM wall and will allow at 1/200 the steel beam to be clear of the structural outline by 0.70".

It is understood that there is no cost or time associated with this change for the BSE Contractor work and that TJPA accepts the additional overbreak concrete generated by this small adjustment in the top horizontal placement in exchange for a better chance of avoiding structural encroachment issues at the final invert level.

It is also understood that the use of the increased top horizontal tolerance is contingent on actual field physical property line clearances for the CDSM shoring wall.

T-0180.1 **BSE - CDSM Wall Tolerance** **Closed** **06/24/2011** **07/04/2011** **07/07/2011** **Potentially** ☐

From: Webcor Construction LP Nhi Tran **To:** Turner Construction Compan Daphne Faulkner **Answered By:** Transbay PMPC Roger Rothenburger

Co-Author: Balfour Beatty Infrastructure, Inc. Ural Yal

REQUEST:

Reference Response to RFI#T-0180

Please delete the first sentence "TJPA did not request this RFI" of the response for RFI T-0180, because it is the wrong statement.
Emilio Cruz, PMPC, requested to submit this RFI at the Schedule Review Meeting on 6/14/2011 at W-O JV Office Conference Room, 183 Fremont St.

SUGGESTION:

ANSWER: **Accept Suggestion:** ☐

It depends on how "request" is defined. TJPA did "request" the RFI for expanded tolerances but only if the CDSM shoring wall subcontractor felt that they needed more tolerances and wished to have TJPA confirm that it would accept a larger set back (4") than allowed in the Specifications (2"). This is the same undertanding held my Emillio Cruz.

TJPA has allowed a 4" set back while maintaining the verticality specifications for the steel soldier piles (1/200) and the CDSM (1/150). The CDSM shoring wall subcontractor has initially selected a 2" setback for placing the steel soldier beams. At 1/200 for a depth of 55ft there could be as much as 1.3" of

Number	Subject	Status	Date Created	Date Required	Date Answered	Cost Impact	Proceed

encroachment (1/200x55x12 - 2" = 1.33").

At the very least it would seem that a 3" setback would minimize further the posibility for encroachment since the 1/200 is still a difficult specification to achieve as TJPA understands it from the CDSM subcontractor.

Since encroachment can be very problematic with the concrete structural wall TJPA supports the larger setback to avoid difficult encroachment problems while maintaining the specifications on verticality. The issue of who requested what and when is immaterial. TJPA has accepted the potential for additional concrete from allowing a larger setback and the BSE Contractor has accepted any impact to the bracing system from a larger impact.

T-0181 **BSE - CDSM Pile Tolerance Measurement Location** **Closed** **06/22/2011** **07/02/2011** **07/01/2011** **Potentially** ☐

From: Webcor Construction LP Nhi Tran **To:** Turner Construction Compan Daphne Faulkner **Answered By:** Adamson Associates, Inc George Metzger

Co-Author: Balfour Beatty Infrastructure, Inc. Ural Yal

REQUEST:

Reference Specification Section 31 56 13

BBII's subcontractor DND would like to confirm the exact location of the soldier pile, where the pile tolerance is to be measured. Please find below DND's question:

"It is our understanding that the tolerance of the soldier pile beams is to be measured at the plan top of pile elevation. Is this correct?"

Please confirm that DND's interpretation of the pile tolerance measurement is correct.

SUGGESTION:

ANSWER: **Accept Suggestion:** ☐

ARUP Response:

We confirm that the tolerance refers specifically to the location of the CDSM wall and soldier pile centerlines.

Section 31 56 13 3.3 A. states: "The location of the CDSM wall centerline relative to that shown on the Drawings is 0" toward the excavation and 2" away from the excavation." This refers to the location at the ground surface ("original grade") at the start of drilling.

Section 31 56 13 3.13 B. 8. states: "Acceptable construction tolerance for the location of the soldier pile centerline relative to that shown on the Drawings is 0" toward the excavation and 3" maximum away from the excavation." This refers to the location at ground surface ("original grade") at the start of pile installation.

Please also refer to 31 56 13 3.4 A and 31 56 13 3.13

Number	Subject	Status	Date Created	Date Required	Date Answered	Cost Impact	Proceed

B 2 which stipulates respectively the vertical alignment of the CDSM wall and soldier piles.

T-0181.1 **BSE - CDSM Tolerances** **Closed** **07/21/2011** **07/31/2011** **07/26/2011** **Potentially** ☐

From: Webcor Construction LP Nhi Tran **To:** Turner Construction Compan Gary Krutsch **Answered By:** Adamson Associates, Inc George Metzger

Co-Author: Balfour Beatty Infrastructure, Inc. Ural Yal

REQUEST:

Reference RFIs #T-180, #T-0180.1, #T-0181 and Specification Section 31 56 13

Previous RFIs T-180, T-180.1, and T-181 have all addressed CDSM shoring wall tolerances. Below is BBII's interpretation of the responses:

1. Horizontal Tolerance:
a) CDSM Columns: 0" in towards the train box, 2" maximum away from the train box - measured relative to the "plan" CDSM shoring wall centerline located at the ground surface (original grade) at the start of drilling (W/O comment - Reference Specification Section 31 56 13, 3.3.A)

b) Steel Soldier Pile: 0" in towards the train box, 4" maximum away from the trainbox - measured relative to the "plan" CDSM shoring wall centerline located at the ground surface (original grade) at the start of drilling (W/O comment - Reference Specification Section 31 56 13, 3.13.B.8)

2. Vertical Tolerance:
a) CDSM Columns: Inclination deviation no more than 1:150 (horizontal to vertical)
(W/O comment - Same as stated in Specification Section 31 56 13, 3.4.A)

b) Steel Soldier Pile: Inclination no more than 1:200 (horizontal to vertical)
(W/O comment - Same as stated in Specification Section 31 56 13, 3.13.B.9)

SUGGESTION:

ANSWER: **Accept Suggestion:** ☐

ARUP Response:

Using the numbering in the RFI:

1 a. 0" in towards the train box, 4" maximum away from the train box is acceptable everywhere along the alignment except at wall segments A/26-30 and A/30-33.5. 0" in towards the train box, 2" maximum away from the train box is acceptable at wall segments A/26-30 and A/30-33.5.

1 b. 0" in towards the train box, 4" maximum away from the trainbox is acceptable everywhere along the alignment.

2 a. Confirmed

2 b. Confirmed

Webcor/Obayashi Joint Venture

PROJECT MANAGEMENT - REQUEST AND ANSWERS LOG

30100 - Transbay Transit Center Project

Number	Subject	Status	Date Created	Date Required	Date Answered	Cost Impact	Proceed

Please confirm this is acceptable

T-0182 **BSE - Inclinometer Locations Within The CDSM Wall** **Closed** **06/23/2011** **07/03/2011** **06/24/2011** **Potentially** ☐

From: Webcor Construction LP Nhi Tran **To:** Turner Construction Compan Daphne Faulkner **Answered By:** Adamson Associates, Inc George Metzger

Co-Author: Balfour Beatty Infrastructure, Inc. Ural Yal

REQUEST:

Reference Sheets GT-1301, GT-1302, Specification Section 31 56 13, and Transmittal No. 140-01802 (attached)

Please refer to the Instrumentation Plan within the contract drawings GT-1301 & GT-1302, which depicts the rough locations of the 15 inclinometers (IW-1 through IW-15) that are to be installed through the CDSM shoring wall. Please notify BBII of the exact locations of those inclinometers by utilizing the soldier pile numbers 1 through 681, sent in Transmittal No. 140-01802 (attached).

SUGGESTION:

ANSWER: **Accept Suggestion:** ☐

ARUP Response:

Provide pipes at the piles (beams) in accordance with detail 13/GT-5101 in the following fourteen beam numbers: 46, 97, 138, 226, 306, 325, 340, 443, 458, 478, 497, 556, 641, 730. Refer to the plan submitted with the RFI for the beam numbers.

As noted in 13/GT-5101, wood block shall be used at the bottom of the pipe. The top of the pipe shall be covered with duct tape to prevent filling with soil cement.

T-0182.1 **BSE - Connector Wall Inclinometer Locations** **Closed** **06/30/2011** **07/10/2011** **07/05/2011** **Potentially** ☐

From: Webcor Construction LP Nhi Tran **To:** Turner Construction Compan Daphne Faulkner **Answered By:** Adamson Associates, Inc George Metzger

Co-Author: Balfour Beatty Infrastructure, Inc. Ural Yal

REQUEST:

Reference RFI#T-0182, Transmittal No. 140-01802, and Specification Section 31 56 13

BBII is in receipt of the Engineer's response to RFI T-0182, which lists the fourteen pile numbers where the inclinometers will be installed. Please note that pile # 443 was already installed on 06/18/2011, as part of the CDSM test panel.

Can the inclinometer casing be installed at pile # 446, instead of pile # 443?

SUGGESTION:

ANSWER: **Accept Suggestion:** ☐

ARUP Response:

The inclinometer casing shall be installed in pile number 440 rather than number 443.

☐

Number	Subject	Status	Date Created	Date Required	Date Answered	Cost Impact	Proceed
T-0183	**BSE - Connector Wall Shift**	**Closed**	**06/23/2011**	**07/03/2011**	**06/27/2011**	**Potentially**	

From: Webcor Construction LP Nhi Tran
Co-Author: Balfour Beatty Infrastructure, Inc. Ural Yal
To: Turner Construction Compan Daphne Faulkner
Answered By: Adamson Associates, Inc George Metzger

REQUEST:

Reference RFI#T-0178, Sheets GT-2201, GT-5101, and attached sketch

Per the Engineer's response to RFI T-0178, it is acceptable to shift the CDSM Connector Columns to the east and to add additional columns to provide CDSM material for the full width of the Buttress. Please confirm that it is acceptable to shift the lower three rows of the CDSM Connector Columns approximately 3'-6" to the east and add two more columns to the top row. Additionally, please confirm that the CDSM Shoring Wall between Gridlines 26 and 30 can still be installed per GT-2201 and Table 16/GT-5101.

SUGGESTION:

ANSWER: **Accept Suggestion:** ☐

ARUP Response:

Provided there is no additional cost to the TJPA, it is acceptable to shift the connector columns and add columns as proposed and shown on the sketch.

The CDSM Shoring Wall between Gridlines 26 and 30 shall be installed per GT-2201 and Table 16/GT-5101.

T-0183.1	**BSE - Connector Wall Shift**	**Closed**	**06/30/2011**	**07/10/2011**	**07/11/2011**	**Potentially**	☐

From: Webcor Construction LP Nhi Tran
Co-Author: Balfour Beatty Infrastructure, Inc. Ural Yal
To: Turner Construction Compan Daphne Faulkner
Answered By: Adamson Associates, Inc George Metzger

REQUEST:

Reference RFI#T-0151, RFI#T-0178, RFI#T-0183, Specification Sections 31 63 29 and 31 56 13, and attached drawing

Please refer to the Engineer's response to RFI # T-0151, which accepted the expansion of the Buttress 4'-4" to the east. Please also refer to the Engineer's response to RFI No. T-#0178, where the designer required the connector columns be shifted and/or supplemented with additional columns to provide CDSM material for the full width of the buttress. BBII suggests to revise the connector column layout per the attached drawing and install two additional connector columns at Grid "A" and "30" intersection.

Please confirm, if the proposed revision of the CDSM connector columns according to the attached drawing fulfills the design requirement.

Also, please issue revised construction drawings that would reflect the changes made to the Buttress and the CDSM connector walls.

SUGGESTION:

ANSWER: **Accept Suggestion:** ☐

ARUP Response:

The locations of the CDSM connector columns shown on the sketch accompanying the RFI are acceptable. The locations of the buttress shafts shown on the sketch accompanying the RFI have been revised. Please see the marked-up sketch attached to this response.

A revised GT-2201 will not be issued.

Webcor/Obayashi Joint Venture

PROJECT MANAGEMENT - REQUEST AND ANSWERS LOG

30100 - Transbay Transit Center Project

Number	Subject	Status	Date Created	Date Required	Date Answered	Cost Impact	Proceed
T-0184	**BSE - CIDH Pile Rebar Cage Hoop Size**	**Closed**	**06/27/2011**	**07/07/2011**	**06/28/2011**	**Potentially**	☐

From: Webcor Construction LP Nhi Tran **To:** Turner Construction Compan Daphne Faulkner **Answered By:** Adamson Associates, Inc George Metzger

Co-Author: Balfour Beatty Infrastructure, Inc. Ural Yal

REQUEST:

Reference Sheet GT-5202, Specification Section 03 20 01, attached sketch, and approved Shop Drawings from Package TA2010-032001A05

Drawing 12/GT-5202 shows 5" clearance between the hoop OD and the inside diameter of a 7' +/- 2" shaft. Per discussions with Becho, at least 3" of clearance is needed between the rebar spacers and the ID of the casing to facilitate proper installation of the rebar cages inside the casing.

BBII would like to propose 7 1/4" minimum clearance in lieu of the 5" clearance (shown on 12/GT-5202) between the hoops and the inside diameter of the hole. Changing the clearance from 5" to 7 1/4" would give Becho the 3" of clearance that they need between the spacers and casing ID.

Note that the approved rebar shop drawings show 5" clearance to the hoops as per 12/GT-5202. BBII will submit for your records only revised shop drawings showing the proposed 7 1/4" minimum clearance.

SUGGESTION:

ANSWER: **Accept Suggestion:** ☐

ARUP Response:

Changing the clearance from face of reinforing steel to the soil face from 5" to 7 1/4" is acceptable.

T-0185	**Division 01 specifications issued for the TG08.1 package**	**Closed**	**06/29/2011**	**07/09/2011**		**Potentially**	☐

From: Webcor Construction LP Tim Maxwell **To:** Turner Construction Compan Daphne Faulkner **Answered By:**

Co-Author:

REQUEST:

Confirm if any of all of the Specification Sections 00 01 10, 00 01 15, 00 01 16, 00 03 50, 01 10 20 / APH, 01 10 30, 01 10 30 / APA, and 01 80 50 issued for the TG08.1 bid documents are to be incorporated into the overall project specifications. If so, the specifications should be issued to W/O by Field Order or Change Order.

SUGGESTION:

ANSWER: **Accept Suggestion:** ☐

T-0186	**BSE - Hazardous Materials Removed From 564 & 568 Howard Street**	**Closed**	**06/30/2011**	**07/10/2011**	**07/07/2011**	**Potentially**	☐

From: Webcor Construction LP Nhi Tran **To:** Turner Construction Compan Daphne Faulkner **Answered By:** Turner Construction Comp Jack Adams

Co-Author:

Number	Subject	Status	Date Created	Date Required	Date Answered	Cost Impact	Proceed

REQUEST:

Reference Final Pre-Demolition Hazardous Materials Assessment: Asbestos & Lead Survey (564 & 568 Howard St) - June 2011, prepared for ERM-West by Millennium Consulting Associates

Please confirm that all the hazardous materials identified in the Final Pre-Demolition Hazardous Materials Assessment: Asbestos & Lead Survey (564 & 568 Howard St) - June 2011, will be removed by the demolition contractor.

SUGGESTION:

ANSWER: **Accept Suggestion:** ☐

Haz Mat abatement will include the materials identified in this report, however removal will be to the extent of demolition drawings issued for Demolition.

T-0187 **BSE - Connector Wall Inclinometer Locations - SEE RFI 182.1** **Closed** **06/30/2011** **07/10/2011** **08/23/2011** **Potentially** ☐

From: Webcor Construction LP Nhi Tran **To:** Turner Construction Compan Daphne Faulkner **Answered By:** Webcor Construction LP Joanne Filipas

Co-Author: Balfour Beatty Infrastructure, Inc. Ural Yal

REQUEST:

Reference RFI#T-0182, Transmittal No. 140-01802, and Specification Section 31 56 13

BBII is in receipt of the Engineer's response to RFI T-0182, which lists the fourteen pile numbers where the inclinometers will be installed. Please note that pile # 443 was already installed on 06/18/2011, as part of the CDSM test panel.

Can the inclinometer casing be installed at pile # 446, instead of pile # 443?

SUGGESTION:

ANSWER: **Accept Suggestion:** ☐

SEE RFI T-0182.1.

T-0188 **BSE - Timber Piles Minna Street** **Closed** **07/01/2011** **07/11/2011** **07/05/2011** **Potentially** ☐

From: Webcor Construction LP Masashi Kojima **To:** Turner Construction Compan Daphne Faulkner **Answered By:** Turner Construction Comp Jack Adams

Co-Author: Balfour Beatty Infrastructure, Inc. Ural Yal

REQUEST:

Reference D-2211 and D-5101.
During the pre-trenching operation on Minna Street between Gridlines 9-17, BBII discovered unknown timber piles. The timber piles are not shown on the BSE drawings. See attached BSE drawing D-2211, D-5101. The attached pictures indicate timber piles to be approx 2ft

SUGGESTION:

ANSWER: **Accept Suggestion:** ☐

Please refer to note on Drawing D-2212 which states,

"In areas where (N)CDSM wall conflicts with the existing pile caps and piles, remove (E) pile caps and/or piles prior to construction of (N) Transit Center Building CDSM perimeter shoring wall (see Note 3 and

Number	Subject	Status	Date Created	Date Required	Date Answered	Cost Impact	Proceed

from the centerline of the CDSM wall. These piles meet the general conditions set out in article 3.05A.2. The piles encountered were not outlined in the bid documents. Please confirm the removal of the "unforeseen" timber piles, tracking and paid under a Force account contract change order similarly as done for Zone 4 pre-trench obstructions.

6)."

Please refer to note on Drawing GT-5103 which states,

"Width and Depth as required to remove obstacles"

This includes all piles within the CDSM wall footprint.

"Unforeseen Conditions" are covered in Section 00 07 00 (General Conditions) Article 3.05.A.2 and 3.05.A.3 (Unforeseen or Changed Conditions).

Article 3.05.C states,

C. Differing Site Conditions shall not include:

1. All that is indicated in or reasonably interpreted from the Contract Documents or Reference Documents;

2. All that could be seen on Site

3. Conditions that are materially similar or characteristically the same as those indicated or described in the Contract Documents or Reference Documents.

Since Section 31 56 13 discusses both pre-trenching and the removal of timber piles and Bid Item #6 is for the removal of timber piles before the CDSM shoring wall is installed TJPA believes that this work was indicated and will provide payment for it under Bid Item #2, #4, #6, and #7.

There will be no additional payment for the removal of timber piles for the CDSM wall.

T-0188.1	**BSE - Timber Piles Minna Street**	**Closed**	**07/07/2011**	**07/17/2011**	**07/12/2011**	**Potentially**	☐

From: Webcor Construction LP Masashi Kojima **To:** Turner Construction Compan Daphne Faulkner **Answered By:** Adamson Associates, Inc George Metzger

Co-Author: Balfour Beatty Infrastructure, Inc. Ural Yal

Number	Subject	Status	Date Created	Date Required	Date Answered	Cost Impact	Proceed

REQUEST:

Reference RFI T-0188, Drawing D-2211 and D-5101.

Further to the TJP A response RFI # 188, this response did not address the mentioned timber pile removal method.
Please see the attached cross section showing timber pile location in relationship to the existing utilities and structures. Due to the pile location, in relation to the shoring box BBII proposes direct extraction as done on A line in Zone 3.
Please confirm this removal method is acceptable for the entire length of Minna Street.

SUGGESTION:

ANSWER: **Accept Suggestion:** ☐

ARUP Response:

Arup recommends that the procedure for removing these piles follow the procedure described in Arup's response to RFI T-0146.4.

T-0188.2 **BSE - Timber Piles Minna Street** **Closed** **07/13/2011** **07/23/2011** **07/14/2011** **Potentially** ☐

From: Webcor Construction LP Nhi Tran **To:** Turner Construction Compan Daphne Faulkner **Answered By:** Transbay PMPC Roger Rothenburger

Co-Author: Balfour Beatty Infrastructure, Inc. Ural Yal

REQUEST:

Reference response to RFI#T-0188.1 and RFI#T-0146.4

As discussed at the TG03 BSE Design Team meeting on 7/13/2011, sand shall be used for back fillings instead of the low strength material described in RFI#T-0146.4.
Also, TJPA representative shall observe the extraction and instruct the extraction method in the field, if necessary.

Please confirm.

SUGGESTION:

ANSWER: **Accept Suggestion:** ☐

TJPA Representatives and Arup will observe the method in practice Thursday July 14, 2011 at 10am to observe the method using sand described above for final verification that this method will be acceptable and suggest any changes to the method at that time.

T-0188.3 **BSE - Timber Piles Minna Street** **Closed** **07/18/2011** **07/28/2011** **07/26/2011** **Potentially** ☐

From: Webcor Construction LP Nhi Tran **To:** Turner Construction Compan Daphne Faulkner **Answered By:** Transbay PMPC Roger Rothenburger

Co-Author: Balfour Beatty Infrastructure, Inc. Ural Yal

REQUEST:

Reference RFI#T-0188.2 and attached photos

BBII has concerns for the integrity of the adjacent street and utilities, as a result of the pile extraction being performed on Minna Street in accordance with the response to RFI#T-0188.2. BBII has observed

SUGGESTION:

ANSWER: **Accept Suggestion:** ☐

Contractor's concern for the integrity of the adjacent street and utilities is as a result of the shoring method used - not the result of the pile extraction being performed on Minna Street in accordance with the response to RFI#T-0188.2.

Number	Subject	Status	Date Created	Date Required	Date Answered	Cost Impact	Proceed

undermining and adjacent settlement during the extraction process (see attached photos).

Please advise an acceptable method of pile extraction that will allow this work to continue

The observed undermining and adjacent settlement during the extraction process is to be restored to prevent damage to Utilities installed in Minna Street. The methods allowed in RFI T-0188.2 are to be followed by the Contractor.

Section 31-56-13 Part 3.2.C (CDSM Wall - Pre-trenching) also references Section 32-12-17 (Street Excavation & Restoration) for pre-trenching "...within and or adjacent to the public right of way." In addition Section 31-56-13 Part 3.2.D requires the Contractor to "Comply with all regulatory requirements regarding trench shoring." Both Section the Street Excavation and Restoration Specification 32-12-17 and the regulatory requirements for trench shoring require a shoring system designed by a Professional Engineer and submitted to TJPA as well as the SFDPW. OSHA requires for all trenches deeper than 5 feet and not sloped according to OSHA standards be designed by a Professional Engineer.

Given the above it is the Contractor's responsibility to select the means and methods and to design pre-trench shoring meeting the above requirements.

TJPA observations of the Minna Street pre-trenching operations showed that the "trench shield" method of support where excavation below the trench shield required for both sinking the shield and exposing "obstructions" allowed the loose fill sand at the bottom of the excavation to slough into the excavation. This loss of ground led to settlement of the street and potential settlement of the adjacent water line and sewer.

TJPA notes that the Contractor has commenced using near-flat sheet piles in combination with the trench shield bracing to achieve the depths required. However, no submittal of a design done by a professional engineer has been submitted to TJPA in accordance with the requirements from the Specifications stated above.

An acceptable method of pile extraction includes a suitable trench shoring method and plan that meets

Number	Subject	Status	Date Created	Date Required	Date Answered	Cost Impact	Proceed

the Specification requirements. TJPA has no objection to the use of braced sheet piles as long as the above Specification requirements are met. The actual method of pile extraction with vibration and sand filling has been addressed in a previous RFI and TJPA has witnessed a satisfactory site demonstration of this method of pulling timber piles.

7/20/2011 - George Metzger:

ARUP Response:

Regarding the removal of the piles, Arup recommended a procedure in response to RFI 188.1. Contractor to confirm that this procedure is being implemented as described in the RFI response.

Regarding the installation of temporary shoring to access the piles, this is the Contractor's means and methods.

T-0189 **BSE - CDSM Spoils - Initial Off Haul** **Closed** **07/01/2011** **07/11/2011** **07/05/2011** **Potentially** ☐

From: Webcor Construction LP Masashi Kojima **To:** Turner Construction Compan Daphne Faulkner **Answered By:** Transbay PMPC Roger Rothenburger

Co-Author: Balfour Beatty Infrastructure, Inc. Ural Yal

REQUEST:

Per our meeting on 6-23-11 with the TJPA, PMPC, T&R, TCCO and W/O, this RFI is to confirm the initial off haul of the CDSM spoils to be classified as Class 2 non-hazardous waste and will be paid under bid item #38 due to lack of soil testing data required by the landfill and risk of cross contamination.
BBII is currently in talks with various local landfills and their Consultant with the advice of Treadwell Rollo for the acceptance of the spoil to be classified under "clean soil" (not Class 2).
Please confirm.

SUGGESTION:

ANSWER: **Accept Suggestion:** ☐

"Initial CDSM overflow "spoils" is considered only the overflow spoils from the CDSM test panels in Zone 4. For the single purpose of removing the CDSM test panel overlfow now on the surface in Zone 4 and without prejudice for the classification of future CDSM overflow materials the "iniital" CDSM overflow materials (30 loads+/-) from Zone 4 may be hauled to a Class 2 land fill site. Payment will be in accordance with the Contract for disposal of Class 2 hazardous waste material for this one time until a future classification for CDSM overflow materials can be agreed with the land fill operator.

Webcor/Obayashi Joint Venture

PROJECT MANAGEMENT - REQUEST AND ANSWERS LOG

30100 - Transbay Transit Center Project

Number	Subject	Status	Date Created	Date Required	Date Answered	Cost Impact	Proceed
T-0190	**BSE - Connector Wall Daily As Built Requirement**	**Closed**	**07/01/2011**	**07/11/2011**	**07/13/2011**	**Potentially**	☐

From: Webcor Construction LP Masashi Kojima **To:** Turner Construction Compan Daphne Faulkner **Answered By:** Turner Construction Comp Jack Adams

Co-Author: Balfour Beatty Infrastructure, Inc. Ural Yal

REQUEST:

Reference Specification Section 31 56 13 1.4F.

To satisfy the Section 31 56 13 1.4F requirement, BBII will continue to submit the "DND Daily Construction Report" on a daily basis along with the attached as-built drawing within 24 hours of column installation.

Please confirm that this will satisfy the Section 1.4F requirement: "submit as-built drawings within 24 hours of column installation."

SUGGESTION:

ANSWER: **Accept Suggestion:** ☐

The attached daily report lacks required information (i.e. surveyed as-builts, column diameter, etc.) and therefore does not satisfy the documentation requirements of spec 31 56 13 (1.4, 3.5, 3.11, 3.13, etc.).

T-0191	**BSE - Connector Wall Final As Built Requirement**	**Closed**	**07/01/2011**	**07/11/2011**	**07/12/2011**	**Potentially**	☐

From: Webcor Construction LP Masashi Kojima **To:** Turner Construction Compan Daphne Faulkner **Answered By:** Adamson Associates, Inc George Metzger

Co-Author: Balfour Beatty Infrastructure, Inc. Ural Yal

REQUEST:

Reference Specification Section 31 56 13 3.3B.

To satisfy the Section 31 56 13 3.3B requirement, BBII proposes to submit as built drawings prepared by a California licensed surveyor at the approximate completion of each Zone.

Please confirm that this will satisfy the Section 3.3B requirement: "Following CDSM wall construction, the Contractor shall submit as-built drawings prepared by a California licensed surveyor indicating the location of the CDSM walls relative to the excavation alignment."

SUGGESTION:

ANSWER: **Accept Suggestion:** ☐

ARUP Response:

Contractor to submit as-built drawings within 24 hours of column installation. The drawings shall be prepared by a licensed surveyor and shall indicate the CDSM wall relative to excavation alignment.

T-0191.1	**BSE - CDSM Connector Wall Final As Built Requirement**	**Closed**	**07/27/2011**	**08/06/2011**	**08/03/2011**	**Potentially**	☐

From: Webcor Construction LP Nhi Tran **To:** Turner Construction Compan Gary Krutsch **Answered By:** Adamson Associates, Inc George Metzger

Co-Author: Balfour Beatty Infrastructure, Inc. Ural Yal

REQUEST:

Reference RFI#T-0191 and Specification Section 31 56 13

BBII disagrees with TJPA's interpretation of the

SUGGESTION:

ANSWER: **Accept Suggestion:** ☐

ARUP Response:

Submitting as-built drawings prepared by BBII/DND's

Number	Subject	Status	Date Created	Date Required	Date Answered	Cost Impact	Proceed

requirements of the Specifications in its Response to RFI T-0191.

Article 1.4F, Section 31 56 13 of the Specifications state:
Record Documents
1. Submit as-built drawings within 24 hours of column installation.
2. Note and submit immediately to the TJPA's Representative unusual conditions encountered, including amounts of cement grout overpours during construction.

Article 3.11D2, Section 31 56 13 of the Specifications state:
The Daily Quality Control Report shall include as a minimum the results of the following QC parameter monitoring for each column:
a. Rig number
b. Type of mixing tool
c. Date and time (start and finish) of column construction
d. Column diameter
e. Column top and bottom elevations
f. Grout mix design designation
g. Slurry specific gravity measurements (obtained from the Testing Agency)
h. Description of obstructions, interruptions, or other difficulties during installation and how they were resolved
i. Surveyed as-built of previous day's work in relation to grid

Article 3.3B, Section 31 56 13 of the Specifications state: (emphasis added)
Following CDSM wall construction, the Contractor shall submit as-built drawings prepared by a California licensed surveyor indicating the location of the CDSM walls relative to the excavation alignment.

Article 3.3B of the above provides the only requirement for a survey performed by California licensed surveyor. BBII's proposal in RFI T-0191 exceeded the requirements of Article 3.3B by proposing to submit as-built drawings prepared by a California licensed surveyor at the completion of the CDSM wall at each Zone, rather than at the completion of the entire CDSM scope as the Specifications require.

project staff within 24 hours of installation is acceptable.

As-built drawings prepared by a licensed surveyor shall be submitted as each of the following sections of wall are completed:

1. A-line inside Zone 4

2. J-line inside Zone 4

3. Beale and N-lot

4. Fremont Street

5. First Street

6. A-line inside Zone 3

7. J-line inside Zone 3

8. A-line inside Zones 2 and 1

9. J-line inside Zone 2 to Grid 10

10. J-line inside Zone 1 from Grid 10 to Grid 1 and gridline 1

The drawings for a given section shall be submitted within 14 calendar days of completing that section.

Number	Subject	Status	Date Created	Date Required	Date Answered	Cost Impact	Proceed

Please confirm that submitting as-built drawings prepared by BBII/DND's project staff within 24 hours of installation and as-builts of each zone at the completion of the zone by a licensed surveyor is acceptable. BBII will perform additional survey by a licensed surveyor if necessary at areas of concern, to ensure conformance with the project requirements.

T-0192 **BSE - Unforeseen Tank on Gridline 35** **Closed** **07/06/2011** **07/16/2011** **07/08/2011** **Potentially** ☐

From: Webcor Construction LP Masashi Kojima **To:** Turner Construction Compan Daphne Faulkner **Answered By:** Transbay PMPC Roger Rothenburger

Co-Author: Balfour Beatty Infrastructure, Inc. Ural Yal

REQUEST:

BBII discovered an unforeseen tank structure during the pre-trenching operation along Gridline 35 between Gridline A-J that is not shown on the contract plans. The tank contains liquid substance; the odor from the excavation around the tank, it is assumed this is a fuel liquid. This tank needs to be removed to allow the continuation of the pre-trenching operation. Please advise as soon as possible.

SUGGESTION:

ANSWER: **Accept Suggestion:** ☐

TJPA environmental consultant has contacted Golden Gate Tank Removal Co and removal is being scheduled. The TJPA has not yet received the paperwork from the Golden Gate Tank Removal Co. to schedule the date. TJPA will discuss further with W/O - BBI regarding handling.

T-0192.1 **BSE - Unforeseen Tank on Gridline 35** **Closed** **07/11/2011** **07/21/2011** **08/01/2011** **Potentially** ☐

From: Webcor Construction LP Nhi Tran **To:** Turner Construction Compan Daphne Faulkner **Answered By:** Turner Construction Comp Kevin Chiu

Co-Author: Balfour Beatty Infrastructure, Inc. Ural Yal

REQUEST:

Reference RFI#T-0192 and attached photo

The unforeseen tank discovered during the pre-trench operation on Beale Street contains liquid. The liquid has spilled and is present in the surrounding soil, visible from the surface. The response to RFI#T-0192 does not address the soil surrounding the tank. BBII suspects this soil is contaminated with hydrocarbons in excess of the current approved Class 1 profile.

Please advise on the classification, limits and disposal

SUGGESTION:

ANSWER: **Accept Suggestion:** ☐

See attached test reports

Report Completed By - Title - Date - Work Order - Number of Pages

McCampbell Analytical, Inc. - Analytical Report - July 20, 2011 - 1107352 - 8
McCampbell Analytical, Inc. - Analytical Report - July 25, 2011 - 1107352 A - 8

Number	Subject	Status	Date Created	Date Required	Date Answered	Cost Impact	Proceed

methods for the contaminated soil surrounding the tank.

07/15/2011 Roger Rothenburger

TJPA has had their environmental consultant,Treadwell & Rollo (Peter Cusack) arrange for the underground storage tank (UST) and its contents to be removed, test samples of the material, determine the extent of the contamination, and the proper disposal of the soil around the tank. The following response has been reviewed by Mr. Cusack.

1. Soils in the area of the UST were orginally classified as Class I from 0~6ft below grade and Class II from 6~22 feet below grade (Soils Management Plan figure 4 & 7.
2. Remove and stockpile contaminated soils in the immediate area of UST including 2 feet along the sides of the UST and 2 feet below the UST.
3. If soils beyond this area still have a strong gasoline or petroleum odor then remove those soils as well.
4. The samples taken by TJPA environmental consultant Peter Cusack on Thursday July 14, 2011 will be chemically tested for different contaminents.
5. The results of these tests will not be available for approximately 2 weeks (July 28, 2011).
6. Maintain the contaminated stockpiles covered until classifiecation is complete and further directions are given by TJPA at that time.
7. Backfill the open trench/hole from which the contaminated material described above has been removed with clean suitable material as defined in the Specifications.

T-0192.2 **BSE - Unforeseen Tank on Gridline 35** **Closed** **08/02/2011** **08/12/2011** **08/15/2011** **Potentially** ☐

From: Webcor Construction LP Nhi Tran **To:** Turner Construction Compan Gary Krutsch **Answered By:** Turner Construction Comp Kevin Chiu

Co-Author: Balfour Beatty Infrastructure, Inc. Ural Yal

REQUEST:

Reference RFI#T-0192.1

The Analytical Report for the sample taken from the soil around the Underground Storage Tank (UST) has been

SUGGESTION:

ANSWER: **Accept Suggestion:** ☐

Treadwell and Rollo Response -

Based on the attached analytical results, the soil excavated from the tank removal activities is

Number	Subject	Status	Date Created	Date Required	Date Answered	Cost Impact	Proceed

sent to BBII. The soil classification that has been determined was not listed in the response, nor the Analytical Report. Please advise on the classification of the soil.

considered Class II material and should be disposed of as Class II material using the established soil handling procedures.

T-0193 **BSE - CDSM Buttress Connector Wall** **Closed** **07/07/2011** **07/17/2011** **07/08/2011** **Potentially** ☐

From: Webcor Construction LP Nhi Tran **To:** Turner Construction Compan Daphne Faulkner **Answered By:** Adamson Associates, Inc George Metzger

Co-Author: Balfour Beatty Infrastructure, Inc. Ural Yal

REQUEST:

Reference Specification Section 31 56 13

DND is refining the CDSM Shoring Wall mix design based upon the initial results of the Zone 4 Test Section in order to meet the specified compressive strength and permeability. DND is currently planning on trying 2 new mixes / methods in the CDSM Buttress Connector Wall:

1) Single Phase (down and up with grout only) - 275 kg/m3 cement treatment, 220% water/cement, specific gravity ~1.4
a. Based on Japanese experience
2) Two Phase (down with water, up with grout) - 265 kg/m3 cement treatment, 70% water/cement, specific gravity ~1.7
a. Based on US experience

DND is currently proceeding with the installation of the CDSM Buttress Connector Wall. Per BBII's July 5, 2011 meeting with the Engineer, BBII believes that this approach is acceptable for the CDSM Connector Wall and the CDSM Buttress Connector Wall will not have to be re-mixed in the event that it does not achieve the specified compressive strength of 90 psi at 28 days and 120 psi at 90 days. Please confirm.

SUGGESTION:

ANSWER: **Accept Suggestion:** ☐

ARUP Response:

Arup will review the strength tests from the connector columns and make a determination of acceptable in-situ strength based on these.

T-0194 **BSE - Unforeseen Buried Obstructions at CDSM Connector Wall in Zone 4** **Closed** **07/12/2011** **07/22/2011** **07/19/2011** **Potentially** ☐

From: Webcor Construction LP Nhi Tran **To:** Turner Construction Compan Daphne Faulkner **Answered By:** Transbay PMPC Roger Rothenburger

Number	Subject	Status	Date Created	Date Required	Date Answered	Cost Impact	Proceed

Co-Author: Balfour Beatty Infrastructure, Inc. Ural Yal

REQUEST:

Reference Specification Section 31 56 13, attached sketches, and photo

During the installation of the CDSM Connector Wall at Zone 4, DND's drill rig hit unidentified buried obstructions at approx. 14' - 15' below the original grade (El. 0 ~ -1). Please see DND's attached sketch for further details. The exact location and composition of the obstructions are yet to be determined but BBII's preliminary findings indicate that they are timber piles that were neither shown on the original contract plans nor found during buttress area pile extraction. Find attached the as-built drawing that depicts the locations and the top elevations of the timber piles that BBII extracted at that location. Please note that the top elevations of the extracted piles range between 2.40 to 3.11 feet.

BBII has just been informed by DND Construction that the other rows of the connector wall cannot be installed while these obstructions are being removed per the committee meeting on 07/11/2011, due to the proximity of the obstruction removal trench to the next two rows. The CDSM connector wall installation has currently ceased until further notice. BBII is currently seeking drill rigs capable of removing these obstructions also as discussed at the committee meeting.

Please direct BBII on how to proceed.

SUGGESTION:

ANSWER: **Accept Suggestion:** ☐

TJPA and its Representative agreed that the reasonable approach for removal of the obstructions as encountered was to mobilize an auger drill rig similar to the Viking drill rig used for the dewatering wells and removal of broken off piles along 181 Fremont sreet to drill out the area. A 36" diameter casing was used in this application. This meeting was held on Monday July 11, 2011 at approximately 12:30pm.

The drill rig arrived on site mid Thursday morning July 14, 2011 (3 work days after the site meeting) and drilled until 7pm exploring the CDSM connector piles in the remaining rows. The material removed was some wood (volume less that a 5 gallon bucket - photos attached) and a number (approximately 15 pieces)of chunks of unreinforced concrete 3" to 10" in size.

At this time without more evidence TJPA believes that this material was inadvertantly left behind in the backfilling of the timber pile removal zone. BBI should prepare a formal claim as to why TJPA should pay for this work or delay. TJPA will give it fair consideration but needs to have this filed as a claim outside the RFI process. BBI did perform the work in accordance with specifications and site agreements made as to means and methods for the way forward. The drill rig requiring 3 work days to mobilize was at the choice of BBI to use their subcontractor Malcolm-DND.

T-0195	BSE - Unknown Utility on Beale Street West Side	Closed	07/13/2011	07/23/2011	07/14/2011	Potentially ☐

From: Webcor Construction LP Nhi Tran **To:** Turner Construction Compan Daphne Faulkner **Answered By:** Transbay PMPC Roger Rothenburger

Co-Author: Balfour Beatty Infrastructure, Inc. Ural Yal

REQUEST:

Reference attached photos and drawing

BBI discovered an 8" utility line during the installation of the wheel wash on the west side of Beale Street. The utility indicated in the attached pictures is not shown on the BSE contract drawings. The alignment (North to South

SUGGESTION:

ANSWER: **Accept Suggestion:** ☐

Remove the obstruction in accordance with the best means and methods. Maintain records of labor, equipment, materials for removal. Inform TJPA Representative of the methods chosen before starting work.

Number	Subject	Status	Date Created	Date Required	Date Answered	Cost Impact	Proceed

direction) of this utility appears in conflict with the CDSM wall. On 7/12/2011, BBI was able to confirm that this utility is not active. This utility will need to be removed during the pre-trenching operation, to avoid conflict with the CDSM.

Please advise on the method for removal of this utility line.

T-0196 **BSE - CDSM Shoring Wall Installation Sequence Zone 4 North of A-Line** **Closed** **07/20/2011** **07/30/2011** **07/26/2011** **Potentially** ☐

From: Webcor Construction LP Nhi Tran **To:** Turner Construction Compan Daphne Faulkner **Answered By:** Adamson Associates, Inc George Metzger

Co-Author: Balfour Beatty Infrastructure, Inc. Ural Yal

REQUEST:

Reference Sheet GT-2201 and Specification Section 31 56 13

See Note 1 on Sheet GT-2201. DND is concerned that if the row of buttress connector columns (A/26.5 - A/30) immediately adjacent to the shoring wall is installed prior to the shoring wall, the shoring wall will not meet verticality and tolerance specifications due to a difference in strength of the soil on one side and the CDSM on the other side. BBII believes that it will be possible to install the buttress connector columns after the shoring wall without hitting the shoring wall beams.

Is it acceptable to install the shoring wall prior to the immediately adjacent buttress connector columns?

SUGGESTION:

ANSWER: **Accept Suggestion:** ☐

ARUP Response:

This is acceptable. Contractor to exercise care to prevent the auger from hitting the soldier pile while achieving the column overlap shown on 9/GT-5101.

T-0197 **BSE - Maximum Allowable Vibration** **Closed** **07/20/2011** **07/30/2011** **08/12/2011** **Potentially** ☐

From: Webcor Construction LP Nhi Tran **To:** Turner Construction Compan Daphne Faulkner **Answered By:** Adamson Associates, Inc George Metzger

Co-Author: Balfour Beatty Infrastructure, Inc. Ural Yal

REQUEST:

Reference Specification Sections 31 09 13 and 01 35 65

According to the Final FEIS/EIR, specified in the Specification 01 35 65 as the reference document, the Vibration Impact Criteria, which is the base criteria for the analysis, is shown in the table 5.21-8 (refer to BBI RFI for

SUGGESTION:

ANSWER: **Accept Suggestion:** ☐

The table reportedly from the FEIS/EIR included in the RFI appears to be in error. This shall be addressed by others.

The Action Trigger Level and Maximum Allowable peak particle velocities listed in Table 1 in

Number	Subject	Status	Date Created	Date Required	Date Answered	Cost Impact	Proceed

table).

The vibration impact criteria used in the Final FEIS/EIR contradicts the Maximum Allowable Movement for the vibration (PPV) specified in Specification 31 09 13. In this specification section, the maximum allowable movement for vibration and the action trigger level is described in Table 1 (refer to BBI RFI for table).

Please clarify where within the project site the vibration impact criteria for fragile structures are applicable (according to Specification 01 35 65), and where the maximum allowable movement for vibration of 1 inch per second is applicable (according to Specification 31 09 13).

specification section 31 09 13 are for separate, transient vibration events rather than continuous construction vibration. It is not known if the values shown in the FEIS/EIR table are intended for transient or continuous events.

The Action Trigger Level and Maximum Allowable peak particle velocities listed in Table 1 in specification section 31 09 13 apply to all structures around the site where vibration monitoring will occur. In drawing up these values we have taken into account the types of plant likely to be employed in construction and the very low probability that the natural frequency of the input vibrations will approach those of the surrounding buildings and utilities.

The RFI question regarding the identification of "fragile structures" shall be addressed by others.

URS - Response by Alana Callagy 8/11/2011

The table in the FEIS/EIR included in the RFI is in error. The table cites the FTA as the source of the potential impact thresholds for vibration. However, the table used in the FEIS/EIR appears to have reversed the FTA's threshold levels. The RFI should cite Table 12-3 (page 12-13) of the FTA's Noise and Vibration Manual (www.fta.dot.gov/documents/FTA_Noise_and_Vibration_Manual.pdf).

FTA Table 12-3 is for potential structural or architectural building damage, which is generally a function of Peak Particle Velocity (PPV), not a time-averaged level. These criteria should be applied to both transient and continuous construction events. Furthermore, the PPV value should be presented/evaluated as the vector sum of the PPV values in the three orthogonal coordinate directions (vertical, transverse, and longitudinal or x,y,z).

The FEIS/EIR called out "fragile structures" however when we reviewed the table (after first identifying that the table should be inverted to be consistent with the FTA's manual) it may be assumed that "fragile" would

related to "non-engineered timber and masonry buildings." Based on FTA table 12-3, a little more detailed discussion is as follows:

Class I: buildings in steel or reinforced concrete, such as factories, retaining walls, bridges, steel towers, open channels, underground chambers and tunnels with and without concrete alignment, 0.5 PPV in/sec.

Class II: buildings with foundation walls and floors in concrete, walls in concrete or masonry, stone masonry retaining walls, underground chambers and tunnels with masonry alignments, conduits in loose material, 0.3 PPV in/sec.

Class III: buildings as mentioned above but with wooden ceilings and walls in masonry, 0.2 PPV in/sec.

Class IV: construction very sensitive to vibration; objects of historic interest , 0.12 PPV in/sec.

We are not sure where the maximum allowable value of 1 in/sec (presumably PPV) came from prior to it being put in the spec. This value seems too high relative to the FTA criteria presented in FTA Table 12-3 (which range from 0.12 to 0.5 in/sec PPV for various building categories). Ideally, the vibration values should be measured as close as possible to the edge of the building footprint, preferably in the internal envelop of the building, such as a basement or first floor slab floor within about a foot of the exterior wall nearest to the vibration generating activity. Locations away from the walls and on upper floors should be avoided since these areas could show elevated values due to building amplification. If interior areas are not available, an exterior location close to the edge of the building structure nearest to the construction activity can be used. In either case, care should be taken that the transducer is adequately coupled with the surface being measured and that PPV vector sum values are being reported.

Number	Subject	Status	Date Created	Date Required	Date Answered	Cost Impact	Proceed
T-0197.1	**BSE - Maximum Allowable Vibration**	**Closed**	**07/20/2011**	**07/30/2011**	**09/12/2011**	**Potentially**	☐

Number	Subject	Status	Date Created	Date Required	Date Answered	Cost Impact	Proceed

From: Turner Construction Company Gary Krutsch
Co-Author: Balfour Beatty Infrastructure, Inc. Ural Yal
To: Webcor/Obayashi Joint Ventu Nhi Tran
Answered By: Turner Construction Comp Kevin Chiu

REQUEST:

Refer to RFI #T-0197

SUGGESTION:

ANSWER: **Accept Suggestion:** ☐

Table 5.21-8: Construction Vibration Impact Criteria in the Project EIS / EIR has a number of typos. Refer to Table 12-3: Construction Vibration Damage Criteria in Transit Noise and Vibration Impact Assessment (FTA document # FTA-VA-90-1003-06) for the corrected version. For the avoidance of doubt, these values shall be considered Action Trigger Levels as defined in Section 31 09 13 of the Specification. All the buildings within 25 ft of the site boundary shall be considered to be Category I with the exception of the following buildings that are to be considered Category III:

177/181 Fremont Street

530 Howard

540 Howard

580 Howard

594 Howard

133 Second St

141 / 143 / 145 Second

163 Second

171 Second st.

90 Natoma

92 Natoma

83 Minna

46 Minna

In accordance with the recommendations at Section 12.2.1 of FTA(2006) , we expect BBI to assess quantitatively the potential groundborne vibration impact from site operations on adjacent buildings using the formula:

Number	Subject	Status	Date Created	Date Required	Date Answered	Cost Impact	Proceed

(PPVequip)=(PPVref) x (25/D)**1.5.

Where PPV ref is the reference peak particle velocity for a given item of equipment in Table 12-2 of FTA(2006) and D is the shortest distance between the operating location of the equipment and the building to be assessed.

Where the item of plant is not listed in either FTA(2006) or Caltrans (2004), BBI should carry out calibration measurements at ground surface in order to provide equivalent (PPV ref) values.

BBI should carry out vibration monitoring inside buildings when (PPV equip) is calculated to lie within 90% of the values given in Table 12-3: Construction Vibration Damage Criteria in Transit Noise and Vibration Impact Assessment in FTA-VA-90-1003-06. The Action Trigger and Maximum Allowable movement level for vibration given in Table 1 of Section 31 09 13 is for Category I buildings only.

T-0197.2 **BSE - Maximum Allowable Vibration - VOID** **Closed** **09/12/2011** **09/22/2011** **Potentially** ☐

From: Webcor Construction LP Nhi Tran **To:** Turner Construction Compan Gary Krutsch **Answered By:**

Co-Author: Balfour Beatty Infrastructure, Inc. Ural Yal

REQUEST:

Reference RFI #T-0197, Specification Section 01 35 65 & 31 09 13, and attached map

BBII recognizes and agrees Table 5.12-8 is in error, and BBII will refer to FTA Table 12-3 as the correct table. However, BBII believes the TJPA's response provides information that is in conflict with the specifications as well as between the two separate responses provided. BBII requests the following clarifications and confirmations:

1. BBII has applied FTA Table 12-3 per [RFI #T-0197]

SUGGESTION:

ANSWER: **Accept Suggestion:** ☐

Number	Subject	Status	Date Created	Date Required	Date Answered	Cost Impact	Proceed

(BBI RFI 147) to the attached map. The attached map indicates PPV values for continuous construction events, based on the surrounding buildings. Please review and verify this interpretation. Please note that this table, as also indicated in ARUP's response, applies to "continuous construction events".
2. As also stated in ARUP's response, BBII's interpretation of Section 31 09 13 is that the limits provided in this section apply to "transient construction events". Therefore, contrary to URS' response, the values provided in this section are applicable to transient construction events.

In addition, BBII will apply Table 1 in Specification Section 31 09 13 for transient construction events to all structures around the site. Table 1 indicates the Action Trigger Level for vibration (PPV) is 1/2 inch per second and Maximum Allowable Movement for vibration (PPV) is 1 inch per second.

Please confirm the vibration Peak Particle Velocity (PPV) values indicated above are acceptable for continuous and transient construction events.

T-0198 **BSE - Demolition Drawings in South-West Corner of Zone 1** **Closed** **07/28/2011** **08/08/2011** **08/25/2011** **Potentially** ☐

From: Webcor/Obayashi Joint Venture Nhi Tran **To:** Turner Construction Compan Gary Krutsch **Answered By:** Turner Construction Comp Kevin Chiu

Co-Author: Balfour Beatty Infrastructure, Inc. Ural Yal

REQUEST:

Reference Specification Section 02 41 01

BBII is requesting a copy of the added scope demolition drawings issued to EBI, for the South-West corner of Zone 1.

SUGGESTION:

ANSWER: **Accept Suggestion:** ☐

See attached Transmittal 140-02181, sent to W/O on 8/25/2011.

T-0199 **BSE - Pile Extraction Method For Grid Line 35.2** **Closed** **08/01/2011** **08/11/2011** **08/15/2011** **Potentially** ☐

From: Webcor Construction LP Nhi Tran **To:** Turner Construction Compan Gary Krutsch **Answered By:** Adamson Associates, Inc George Metzger

Co-Author: Balfour Beatty Infrastructure, Inc. Ural Yal

REQUEST:

SUGGESTION:

ANSWER: **Accept Suggestion:** ☐

Number	Subject	Status	Date Created	Date Required	Date Answered	Cost Impact	Proceed

Reference RFI#T-0188.2

After exposing piles at grid line 35.2 east of Beale Street, BBII intends on extracting these piles as per the method described in RFI#T-0188.2 (BBI 0139.2). This involves backfilling any voids with sand. Please confirm this method is acceptable.

ARUP Response:

Arup did not respond to RFI T-0188.2. As noted in our response to RFI T-0188.1, we recommend that the procedure for removing the piles east of Beale Street follow the procedure described in our response to RFI T-0146.4 with the exception that backfilling with sand is acceptable.

T-0200 **BSE - Unforeseen Buried Obstructions - Zone 4 A Line (Gridline 27-34)** **Closed** **08/02/2011** **08/12/2011** **08/12/2011** **Potentially** ☐

From: Webcor Construction LP Nhi Tran **To:** Turner Construction Compan Gary Krutsch **Answered By:** Turner Construction Comp Jack Adams

Co-Author: Balfour Beatty Infrastructure, Inc. Ural Yal

REQUEST:

Reference Specification Section 31 56 13, attached photos, and sketch

On Saturday, July 30th 2011, DND's CDSM drill rig encountered unidentified buried obstructions during the installation of the CDSM Shoring wall panel identified by the pile numbers 285-286 at Zone 4 "A" line between Grid "27 & 28". The newly found obstructions are deeper than the previously excavated timber piles.

DND construction initially attempted to drill through the buried obstructions without success. The drill rig was subsequently moved to further east to drill the next available panel. Between 10:30 am and 3:30 pm, DND made eight drilling attempts along the "A" line between pile numbers # 285 and # 300. All eight drill attempts failed due to the similar obstructions encountered within the 13' - 17' depth range below grade. Consequently, the CDSM shoring wall installation along grid line "A" at Zone 4 had to be suspended. DND is able to provide a drill rig to drill out these obstructions and currently this rig is scheduled to arrive Tuesday morning, August 2, 2011.

These obstructions constitute a differing site condition in accordance with Article 3.05 of Section 00 07 00 of the Specifications.

Please provide confirmation and/or direction regarding the

SUGGESTION:

ANSWER: **Accept Suggestion:** ☐

Per Contract Spec. 31-56-13 Shoring wall by CDSM Method Para 3.2 Pretrenching and removal of Obstructions, Contractor is to " remove any obstructions that might be encountered along the alignment of the walls. The depth and width of trench shall be that required to remove the obstructions from the path of the shoring wall."

This area was to be Pretrenched per Spec and should have been cleared. The Spec calls for fill the voids from pile removal with 300psi CLSM, However; the area in question had CLSM installed of between 1000psi and 1600psi which may be causing this condition.

"Unforeseen Conditions" are covered in Section 00 07 00 (General Conditions) Article 3.05.A.2 and 3.05.A.3 (Unforeseen or Changed Conditions).

Article 3.05.C states,

C. Differing Site Conditions shall not include:

1. All that is indicated in or reasonably interpreted from the Contract Documents or Reference Documents;

2. All that could be seen on Site

Number	Subject	Status	Date Created	Date Required	Date Answered	Cost Impact	Proceed

following:

- BBII is to proceed with drilling out these obstructions on 8/2/2011, so CDSM installation in this area can continue.
- These obstructions constitute a differing site condition.

3. Conditions that are materially similar or characteristically the same as those indicated or described in the Contract Documents or Reference Documents.

T-0201 **BSE - Buttress Shift To South** **Closed** **08/02/2011** **08/12/2011** **08/08/2011** **Potentially** ☐

From: Webcor Construction LP Nhi Tran **To:** Turner Construction Compan Gary Krutsch **Answered By:** Adamson Associates, Inc George Metzger

Co-Author: Balfour Beatty Infrastructure, Inc. Ural Yal

REQUEST:

Reference Sheet GT-2201, RFI#T-0151, and attached sketch

Per response to RFI T-0151, the Buttress can expand to the east as long as it doesn't shift to the south. Per discussions with Arup in last week's TG03 BSE Design Team Coordination Meeting (7/27/2011), it is acceptable for the Buttress to shift to the south per the attached sketch. Please confirm.

SUGGESTION:

ANSWER: **Accept Suggestion:** ☐

ARUP Response:

The shift shown on the sketch is acceptable.

T-0202 **BSE - Pile Extraction Method For Grid Line 33.5** **Closed** **08/04/2011** **08/14/2011** **08/12/2011** **Potentially** ☐

From: Webcor Construction LP Nhi Tran **To:** Turner Construction Compan Gary Krutsch **Answered By:** Turner Construction Comp Jack Adams

Co-Author: Balfour Beatty Infrastructure, Inc. Ural Yal

REQUEST:

Reference RFI#T-0146.2

After exposing 5 piles at gridline 33.5 west of Beale Street, BBII intends on extracting these piles as per the accepted method described in RFI # T-0146 2,

"6. BBII will extract the wood piles with vibratory hammer, with the same stroking procedure without steel casing. BBII will perform dewatering enough to be able to connect the hammer to the pile.
7. BBII will backfill the void with low strength material Central Concrete Mix FOA100CX (RFI #T-0138.1).

SUGGESTION:

ANSWER: **Accept Suggestion:** ☐

Contractor may wish to consider placing the steel sheet prior to excavating to retain the material under Beale Street to keep it from sloughing into the excavation.

Extract the wood piles with vibratory hammer, with the same stroking procedure without steel casing. BBII will perform dewatering enough to be able to connect the hammer to the pile.

Option: Backfill the void with CLSM low strength material Central Concrete Mix FOA100CX (RFI #T-

Number	Subject	Status	Date Created	Date Required	Date Answered	Cost Impact	Proceed

8. BBII will backfill the piles.

Answer:
Per Brian Dykes, this work is authorized to proceed. Allowable work hours will be established after 199 Fremont pile extraction begins."

This involves backfilling any voids with 1 sack sand. The attached drawing indicates the location and quantity of piles to be extracted. Please confirm that this method is acceptable.
Also, please advise if any work hour restrictions apply.

0138.1).
Option: Back fill the pile voids using a tremie pipe of minimum length 20ft attached to the concrete bucket. The tremie shall be inserted as far into the pile hole as possible prior to pouring the concrete, and the concrete shall be placed using normal tremie techniques. BBII will make efforts to pour the material into the void as possible, but BBII is not responsible to eliminate void completely."(RFI 146.4)

Recommends that the procedure for removing these piles follow the procedure described in Arup's response to RFI T-0146.4. Optional is to use method from RFI 188.2. Sand can used for back fillings instead of the low strength material described in RFI#T-0146.4.

T-0203 **BSE - Clearance From Verticals For CSL Tubes** **Closed** **08/04/2011** **08/14/2011** **08/09/2011** **Potentially** ☐

From: Webcor Construction LP Nhi Tran **To:** Turner Construction Compan Gary Krutsch **Answered By:** Adamson Associates, Inc George Metzger

Co-Author: Balfour Beatty Infrastructure, Inc. Ural Yal

REQUEST:

Reference Sheet GT-5202, Specification Section 31 63 29, and attached photo

In the Phase 1 DFOW Buttress Rebar QC Meeting at Harris-Salinas Rebar's yard in Livermore on 8/01/2011, ARUP suggested moving the adjacent vertical bars away from the CSL tubes to allow for approximately 4" of concrete cover along the entire length of the shaft. Please confirm.

SUGGESTION:

ANSWER: **Accept Suggestion:** ☐

ARUP Response:
The longitudinal bars on each side of each CLS tube shall be shifted so that the clear distance between a given bar and the CSL tube is 3" minimum, 4" maximum. The total number of bars which will be shifted is 8.

T-0204 **BSE - Tie Backs Along 535 Mission Street - Vacant Lot** **Closed** **08/04/2011** **08/14/2011** **08/10/2011** **Potentially** ☐

From: Webcor Construction LP Nhi Tran **To:** Turner Construction Compan Gary Krutsch **Answered By:** Turner Construction Comp Jack Adams

Co-Author: Balfour Beatty Infrastructure, Inc. Ural Yal

REQUEST:

SUGGESTION:

ANSWER: **Accept Suggestion:** ☐

Number	Subject	Status	Date Created	Date Required	Date Answered	Cost Impact	Proceed

Reference GT-2102 & Detail 8 - GT-5103

BBII cannot locate the tie backs in the area of the vacant lot on Minna St. described in the Detail 8 on Contract Drawing GT-5103. The BBII crew went to a depth of 17 feet along the Pre-Trench and was unable to locate the tie backs. This was an additional foot more than the specified 15'-0" +/- 1'-0" depth. BBII believes the tie backs do not extend into the Pre-Trench limits and plans to move forward. Please advise if there is information to the contrary.

BBII is to continue plans and specs (Ref: Dwg. Detail 8 GT-5103). Subsequent to this RFI BBII did locate and sever a tie back in Minna Street trench from the 535 Mission St. Project .

BBII was directed to be cautious when installing sheetpile shoring to ensure the Tie Backs are cut back sufficiently to prevent interference with CDSM Drill/Wall installation.

2011-08-09 George Metzger
ARUP Response:
No additional information is available. Turner or PMPC to provide answer to this RFI.

T-0205 **BSE - Testing Weld On Hoops** **Closed** **08/05/2011** **08/15/2011** **08/09/2011** **Potentially** ☐

From: Webcor Construction LP Nhi Tran **To:** Turner Construction Compan Gary Krutsch **Answered By:** Adamson Associates, Inc George Metzger

Co-Author: Balfour Beatty Infrastructure, Inc. Ural Yal

REQUEST:

Reference Sheet GT-5202 and Specification Section 31 63 29

Per SS03.20.01.3.3.B.4, "Inspect welding as required by Code for compliance with AWS D1.4."

Per AWS D1.4.2, "Other welding processes may be used when approved by the Engineer, provided that any special qualification test requirements not covered here are met to ensure that welds are satisfactory for the intended application will be obtained."

As of this writing, the AWS does not cover Resistance Welding which is the type of welding that Harris-Salinas Rebar is using for the hoops. Caltrans has a written specification for Resistance Welding. Per Caltrans Standard Specifications Section 52, four (4) samples out of a lot of one hundred fifty (150) are taken to the lab for testing. If three (3) or more samples comply with the requirements, the whole lot is accepted. If only two (2)

SUGGESTION:

ANSWER: **Accept Suggestion:** ☐

This is acceptable.

Number	Subject	Status	Date Created	Date Required	Date Answered	Cost Impact	Proceed

samples comply, one (1) additional test of four (4) samples out of the same lot is allowed. If any of the four (4) fail, the whole lot is rejected.

It was agreed upon in the DFOW meeting this week (8/1/2011) that it is acceptable to test the lots per Caltrans Standard Specifications. Please confirm.

T-0206 **BSE - Smart Hoops For CSL Tubes** **Closed** **08/05/2011** **08/15/2011** **08/09/2011** **Potentially** ☐

From: Webcor Construction LP Nhi Tran **To:** Turner Construction Compan Gary Krutsch **Answered By:** Adamson Associates, Inc George Metzger

Co-Author: Balfour Beatty Infrastructure, Inc. Ural Yal

REQUEST:

Reference Sheet GT-5202, Specification Section 31 63 29, attached photo and sketch

Drawing GT-5202 shows four (4ea) 4" CSL tubes equally spaced around the perimeter of the shaft tied to reinforced steel.

Approved rebar shop drawing shows a square spider designed to serve two purposes:
1. To allow the tremie pipe to pass through.
2. To keep the CSL tubes equally spaced around the perimeter per Drawing GT-5202.

In subsequent discussions the engineer suggested orientating the CSL tubes at a 23 degree angle from the longitudinal center of pile. In the Phase 1 DFOW Buttress Rebar QC Meeting on 8/1/2011 Harris-Salinas Rebar suggested using "smart hoops" to keep the CSL tubes in place and symmetrical around the perimeter at 23 degrees since the square spider could no longer be utilized for CSL tube alignment. This suggestion was well received by meeting attendees. Please confirm that the 23 degree CSL spacing is required. If so, please advise if the added "smart hoop" CSL alignment bars are acceptable?

SUGGESTION:

ANSWER: **Accept Suggestion:** ☐

The 23 degree CSL spacing is required. The added "smart hoop" CSL alignment bars are acceptable.

T-0207 **BSE - Unknown Fiber Optic on Fremont Street** **Closed** **08/09/2011** **08/19/2011** **08/12/2011** **Potentially** ☐

Number	Subject	Status	Date Created	Date Required	Date Answered	Cost Impact	Proceed

From: Webcor Construction LP Nhi Tran
Co-Author: Balfour Beatty Infrastructure, Inc. Ural Yal
To: Turner Construction Compan Gary Krutsch
Answered By: Turner Construction Comp Gary Krutsch

REQUEST:

Reference Specification Section 02 41 01

PG&E was scheduled to have all the utilities and structures confirmed dead on the East side of Fremont Street 8/07/2011 as part of the phase 1 PG&E relocation work. On 8/08/2011, W/O and PG&E conducted a USAR walk-through on Fremont Street to sign off and confirm that all PG&E utilities and structures have been confirmed de-energized and abandoned. PG&E discovered a live fiber optic cable between vaults 1675-1670. This fiber optic cable is in conflict with and causing delays to the CDSM wall and Buttress work commencement.

Please provide a date this fiber will be confirmed de-energized.

SUGGESTION:

ANSWER: **Accept Suggestion:** ☐

Fiber was confirmed de-energized on 8/12/11.

T-0208 **BSE - Long Term Seismic Loading** **Closed** **08/09/2011** **08/19/2011** **08/12/2011** **Potentially** ☐

From: Webcor Construction LP Nhi Tran
Co-Author: Balfour Beatty Infrastructure, Inc. Ural Yal
To: Turner Construction Compan Gary Krutsch
Answered By: Adamson Associates, Inc George Metzger

REQUEST:

Reference Sheet GT-1110 and Specification Section 31 55 00

Note 7 on sheet GT-1110 states that "Seismic Increment Loads shall be considered to be long term loading." Per conversation at the 8/03/11 TG03 Design Team Coordination meeting, BBII understands that this note applies only to the lower level struts at the 301 Mission buttress case. Please confirm.

SUGGESTION:

ANSWER: **Accept Suggestion:** ☐

We refer to Comments and Corrections provided by DBI to TJPA in a document dated July 27, 2011 at item G 23.

With reference to Drawing GT-1110 we clarify that Note 7 applies strictly to the incremental strut loads in Table 7 (301 Mission buttress case shaking analysis) and consequently apply to calculations for the lowest level of struts and walings between Gridlines 26 and 30. The incremental strut loads given in Tables 5, 6 and 8 can be considered as transient, rather than long term, loads on the bracing system.

T-0209 **BSE - Abutment Bearing On CDSM Wall** **Closed** **08/11/2011** **08/21/2011** **08/19/2011** **Potentially** ☐

From: Webcor Construction LP Nhi Tran
Co-Author: Balfour Beatty Infrastructure, Inc. Ural Yal
To: Turner Construction Compan Gary Krutsch
Answered By: URS Corporation David Fyfe

REQUEST:

SUGGESTION:

ANSWER: **Accept Suggestion:** ☐

Number	Subject	Status	Date Created	Date Required	Date Answered	Cost Impact	Proceed

Reference Specification 01 53 13

During previous discussions with URS, ARUP, and DPW it has been expressed that the temporary bridge abutments should not bear on the CDSM shoring wall. The temporary bridges spec section 01 53 13, however, specifically states that "abutments for bridges shall be supported by the CDSM shoring wall." Please advise if this statement still applies.

Yes, statement still applies.

T-0209.1 **BSE - Abutment Bearing On CDSM Wall** **Closed** **09/02/2011** **09/12/2011** **09/09/2011** **Potentially** ☐

From: Webcor Construction LP Nhi Tran **To:** Turner Construction Compan Gary Krutsch **Answered By:** Adamson Associates, Inc George Metzger

Co-Author: Balfour Beatty Infrastructure, Inc. Ural Yal

REQUEST:

Reference RFI#T-0209, Specification Section 01 53 13, and attached sheets

Included with this RFI are loading conditions for CDSM supported abutments. Please confirm that the shoring wall as currently designed can accommodate the loading.

SUGGESTION:

ANSWER: **Accept Suggestion:** ☐

ARUP Response:

Contractor to provide calculations demonstrating the adequacy of the shoring wall to support the loads from the bridges.

T-0209.2 **BSE - Abutment Bearing On CDSM Wall - Follow-Up** **Closed** **09/13/2011** **09/23/2011** **09/16/2011** **Potentially** ☐

From: Webcor Construction LP Nhi Tran **To:** Turner Construction Compan Gary Krutsch **Answered By:** Adamson Associates, Inc George Metzger

Co-Author: Balfour Beatty Infrastructure, Inc. Ural Yal

REQUEST:

Reference RFI #T-0209.2, Specification Section 01 53 13, and attached sheets

As requested by ARUP, please see the attached loads placed on each individual CDSM soldier beam beneath the proposed temporary bridge abutment. The loads include both the bracing self weight and the combined dead and live loads of the temporary bridges.

BBII requests confirmation from the CDSM shoring wall EOR that these imposed loads do not exceed the assumed vertical loads used during original design

SUGGESTION:

ANSWER: **Accept Suggestion:** ☐

ARUP Response: The results of the analysis reported in the table "SUMMARY OF LOADS ON CDSM SOLDIER PILES AT BRIDGE ABUTMENTS" indicates that, for a number of locations, the load per soldier pile is too great and that the pile spacing will need to decrease from 4'-0" o.c. to 2'-0" o.c. to reduce the load per pile. Subsequent analysis by the Contractor shall demonstrate the structural adequacy of the pile shape and the adequacy of the pile embedment.

Number	Subject	Status	Date Created	Date Required	Date Answered	Cost Impact	Proceed

analysis.

T-0209.3 **BSE - Abutment Bearing On CDSM Wall - Follow-Up** **Closed** **09/13/2011** **09/23/2011** **09/28/2011** **Potentially** ☐

From: Webcor Construction LP Nhi Tran **To:** Turner Construction Compan Gary Krutsch **Answered By:** Adamson Associates, Inc George Metzger

Co-Author: Balfour Beatty Infrastructure, Inc. Ural Yal

REQUEST:

Reference RFI #T-0209.2, Specification Section 01 53 13, and attached sheets

As requested by ARUP, please see the attached loads placed on each individual CDSM soldier beam beneath the proposed temporary bridge abutment. The loads include both the bracing self weight and the combined dead and live loads of the temporary bridges.

BBII requests confirmation from the CDSM shoring wall EOR that these imposed loads do not exceed the assumed vertical loads used during original design analysis.

SUGGESTION:

ANSWER: **Accept Suggestion:** ☐

ARUP Response:

1. The CDSM wall cannot accept the widely varying point loads as implied by the submitted tables of imposed loads from the cross-lot bridges. We recommend that a spreader beam arrangement is provided for each bridge abutment and is connected to the all the affected W21x201 soldier piles in the CDSM wall. A vertical spring constant of 1150 kips/inch can be used to calculate the pile reactions under such a spreader beam arrangement for the range of loads given.

2. The allowable loads from the bridge deck for the soldier piles on the basis of 1 above is 90 kips/pile at an excavation of 10 feet below grade and can be taken to fall linearly to 60 kips/pile at 60 ft elevation depth.

3. It follows from 2 above that the ability of the CDSM wall to carry the maximum load, the construction crane condition, will reduce as excavation proceeds. This may require disassembly of the construction crane into smaller components in order to remove it from site at the later stages of excavation.

4. The load pathway, from the bridge deck at the abutment into the ground, is in direct shear transfer across 2 interfaces: steel/soil mix and soil mix/in-situ ground. The shear transfer across the steel/soil mix interface cannot be estimated with accuracy, in the absence of an embedded soldier pile test in compression or tension. If the early excavations, down to 10 feet below grade at the bridge abutment, show that soil mix falls away easily from the face of the W21

Number	Subject	Status	Date Created	Date Required	Date Answered	Cost Impact	Proceed

steel soldier pile, the bond/interface shear is likely to be very low indeed and the allowable capacity of the soldier piles will need to be re-evaluated.

T-0209.4 **BSE - Abutment Bearing On CDSM Wall - Follow-Up** **Closed** **01/09/2012** **01/19/2012** **01/16/2012** **Potentially** ☐

From: Webcor Construction LP Kirk Nielsen **To:** Turner Construction Compan Gary Krutsch **Answered By:** Arup Kevin Clinch

Co-Author:

REQUEST:

Reference T-0209.3, Specification Section 01 53 13

Contrary to RFI response T-0209.3, subsequent to the test pile loading CR T-025 during which there was little to no movement please confirm the revised direction to install the bridge abutment atop the CDSM wall at all streets pursuant to specification section 01 53 13.1.2.A.

SUGGESTION:

ANSWER: **Accept Suggestion:** ☐

Arup cannot provide a response to this RFI without seeing the revised design of the bridge bearing on the soldier piles and the revised calculations.

T-0210 **BSE - Pile #498 Top Of Pile Elevation Issue** **Closed** **08/16/2011** **08/26/2011** **08/19/2011** **Potentially** ☐

From: Webcor Construction LP Nhi Tran **To:** Turner Construction Compan Gary Krutsch **Answered By:** Adamson Associates, Inc George Metzger

Co-Author: Balfour Beatty Infrastructure, Inc. Ural Yal

REQUEST:

Reference W/O NOTICE0010 (attached), Sheet GT-5101, and Specification Section 31 56 13

Please address the following information request from BBII's subcontractor DND:

"The specifications do not specify an allowable tolerance with regard to the vertical position of the beam tip relative to the plan drawings (GT-5101, Note 16). Please clarify the allowable tolerance for the beam tip elevation.

For example, beam 498 (BBII ID #287) was set slightly high. The beam was measured prior to setting to be 97'-5 1/2" long. It was set to a top elevation of approximately +16'-11" which calculates a tip elevation of approximately -80.63'. Specified tip elevation is -81-0" in this wall section (J/27-33.5)."

SUGGESTION:

ANSWER: **Accept Suggestion:** ☐

ARUP Response:

The acceptable variation in bottom of pile elevation (shown on 16/GT-5101) is +/- 1'-6". In order to verify this using the top of pile elevation as the measure, the Contractor shall provide Turner with the length of the piles.

Webcor/Obayashi Joint Venture

PROJECT MANAGEMENT - REQUEST AND ANSWERS LOG

30100 - Transbay Transit Center Project

Number	Subject	Status	Date Created	Date Required	Date Answered	Cost Impact	Proceed
T-0211	**Easement Information**	**Closed**	**08/11/2011**	**08/21/2011**	**08/23/2011**	**Potentially**	☐

From: Webcor Construction LP Nhi Tran **To:** Turner Construction Compan Gary Krutsch **Answered By:** Turner Construction Comp Jack Adams

Co-Author:

REQUEST:

Reference Email "Fencing Plan at CDSM Wall Radius R2-1 and X1-1" from Turner on 8/10/2011 and attached documents

W/O received the enclosed email "Fencing Plan at CDSM Wall Radius R2-1 and X1-1" and it's attachments from Turner on 8/10/2011, listed below:
- 3192 OR 151 easement.pdf
- Parcel F BNDY-ALTA_AB3721_15A_Rev 1.pdf
- CASFRA_2007 00369409.pdf
- Eminent Domain Fencing Plan .pdf

The information contained in the above documents differs from and/or does not exist in the current contract documents. Please provide a direction on what W/O and our Trade Subcontractors are to do with this easement information. In addition please indicate what requirements the TJPA expects Webcor Obayashi to now comply with.

SUGGESTION:

ANSWER: **Accept Suggestion:** ☐

The information contained in the above documents is provided for information. WO and our Trade Subcontractors are to ensure the 540 Howard has 24 hour access to their easement. The current location of the CDSM wall and protection fencing will accomodate this access.

T-0212	**BSE - Unforeseen Timber Piles At Grid Line 33.5 J**	**Closed**	**08/15/2011**	**08/25/2011**	**08/16/2011**	**Potentially**	☐

From: Webcor Construction LP Nhi Tran **To:** Turner Construction Compan Gary Krutsch **Answered By:** Turner Construction Comp Kevin Chiu

Co-Author: Balfour Beatty Infrastructure, Inc. Ural Yal

REQUEST:

Reference RFI#T-0148.1, Sheet D-2213, attached photos and sketch

BBII exposed 24 piles at gridline 33.5 J close to Beale Street in Zone 4, as shown in the attached photographs. However, drawing D-2213 indicates five piles inside the CDSM wall limits. BBII intends to extract these piles using the method approved in RFI # T-0148 1. Please confirm that it is acceptable to continue tracking this unforeseen work as CR-T-010, as was practiced in this area previously.

SUGGESTION:

ANSWER: **Accept Suggestion:** ☐

RFIs shall be used for interpretation or clarification of the Contract Documents (01 10 40) and a change request (CR) is not a Contract Document as defined by the General Conditions. Questions related to construction means, methods, techniques, sequences, procedures and non Contract Documents will not be replied to by the TJPA and will be rejected (01 10 40).

Refer to the procedures of previously issued CR T-010 for further direction.

T-0213	**BSE - Pile Extraction Method For Concrete Piles Between GL 5-10 at Natoma St**	**Closed**	**08/15/2011**	**08/25/2011**	**08/19/2011**	**Potentially**	☐

From: Webcor Construction LP Nhi Tran **To:** Turner Construction Compan Gary Krutsch **Answered By:** Adamson Associates, Inc George Metzger

Number	Subject	Status	Date Created	Date Required	Date Answered	Cost Impact	Proceed

Co-Author: Balfour Beatty Infrastructure, Inc. Ural Yal

REQUEST:

Reference RFI #T-0188.1, Specification Section 02 41 19, and attached sketch

BBII intends on extracting the existing concrete piles located between gridlines 5 and 10 on the south side, using the method approved in RFI#T-0188.1. This involves extracting piles using the vibratory hammer without a steel casing and backfilling the void with structural pre-trench sand. Attached is a drawing indicating the locations of the piles obstructing the CDSM wall. Please confirm that this is acceptable.

SUGGESTION:

ANSWER: **Accept Suggestion:** ☐

This is acceptable for concrete piles which are 16" x 16" square or less and which are located 16 ft or greater from the nearest face of an adjacent building.

T-0214 **BSE - Instrumentation Protection Slab Zone 4** **Closed** **08/16/2011** **08/26/2011** **08/23/2011** **Potentially** ☐

From: Webcor Construction LP Nhi Tran **To:** Turner Construction Compan Gary Krutsch **Answered By:** Adamson Associates, Inc George Metzger

Co-Author: Balfour Beatty Infrastructure, Inc. Ural Yal

REQUEST:

Reference Sheet GT-5102 and attached shop drawing and BBI sketches

BBII is proposing to pour a 2' thick instrument slab per the attached BBII drawings in lieu of the 1' thick concrete slab shown on Drawing GT-5102 to match the overall thickness of the Buttress Temporary Work Platform Concrete Cap. Approved 6000 psi Central Mix #960PC3Z3 (Submittal Item #TZ1010-033001A10) will be used for the instrument protection slab. Please confirm that this is acceptable.

SUGGESTION:

ANSWER: **Accept Suggestion:** ☐

ARUP Response:

Pouring a 2' thick instrument protection slab in lieu of the 1' thick concrete slab shown on Drawing GT-5102 is acceptable.

Central Mix #960PC3Z3 is acceptable for use in the instrument protection slab.

The reinforcing steel configuration shown on Section A is acceptable. The bars may be shifted to clear the soldier piles and the instrument locations.

Block-outs shall be placed in the slab for the instruments as noted on GT-5102. Contractor to coordinate locations of block-outs with Arup field staff.

The protection slab shall be extended as noted on the attached sketch.

T-0215 **BSE - Diagonally Cut Unforeseen Piles at Grid Line 33.5 J** **Closed** **08/17/2011** **08/27/2011** **08/17/2011** **Potentially** ☐

From: Webcor Construction LP Nhi Tran **To:** Turner Construction Compan Gary Krutsch **Answered By:** Turner Construction Comp Jack Adams

Number	Subject	Status	Date Created	Date Required	Date Answered	Cost Impact	Proceed

Co-Author: Balfour Beatty Infrastructure, Inc. Ural Yal

REQUEST:

Reference Sheet GT-2103, Specification Section 02 41 19, and attached photos

BBII has extracted four (4) unforeseen piles at GL 33.5 J. Three (3) piles had an average length of 45' long. However, one (1) of these piles appeared to have 20' diagonally cut out of it at the bottom (see attached Photo 3). Another pile was only 23' long and appeared to have broken off underground (see attached Photo 1). BBII has concerns that lengths of pile may still remain in ground and will be an obstruction to the CDSM shoring wall installation. Please advise on how to proceed.

SUGGESTION:

ANSWER: **Accept Suggestion:** ☐

Refer to specification 31 56 13, 3.2, A, which states, "The Contractor shall construct a trench along the entire alignment of the shoring wall and the cut-off walls and remove any obstructions that might be encountered along the alignment of the walls. The depth and width of the trench shall be that required to remove the obstructions from the path of the shoring wall."

T-0215.1 **BSE - Diagonally Cut Unforeseen Piles at GL 33.5 J** **Closed** **08/23/2011** **09/02/2011** **08/30/2011** **Potentially** ☐

From: Webcor Construction LP Nhi Tran **To:** Turner Construction Compan Gary Krutsch **Answered By:** Adamson Associates, Inc George Metzger

Co-Author: Balfour Beatty Infrastructure, Inc. Ural Yal

REQUEST:

Reference RFI #T-0215 and RFI #T-0177, Sheet GT-2103 and Specification Section 02 41 19

As the top of the broken pile is 33' below ground, further trenching to remove this pile is not practical. BBII proposes following the procedure approved by RFI T-0177 (BBII 0126) to extract this pile. In the future, BBII proposes this to be the standard procedure when a broken or lost pile presents an obstruction to the CDSM Shoring Wall installation and needs to be extracted.

Please confirm.

SUGGESTION:

ANSWER: **Accept Suggestion:** ☐

ARUP Response:

Arup takes no exception to the use of the method described in RFI T-0177 for this pile.

T-0216 **BSE - Revised Buttress Shop Drawings For Record Only** **Closed** **08/18/2011** **08/28/2011** **08/19/2011** **Potentially** ☐

From: Webcor Construction LP Nhi Tran **To:** Turner Construction Compan Gary Krutsch **Answered By:** Adamson Associates, Inc George Metzger

Co-Author: Balfour Beatty Infrastructure, Inc. Ural Yal

REQUEST:

Reference attached revised CIDH Rebar Shop Drawings, RFI#T-0184, T-0203, T-0205 and T-0206

SUGGESTION:

ANSWER: **Accept Suggestion:** ☐

Arup takes no exception to the shop drawings included with the RFI.

Number	Subject	Status	Date Created	Date Required	Date Answered	Cost Impact	Proceed

Per discussions at the TG03 BSE Design Team meeting on 8/17/2011, it was agreed by Adamson and ARUP to confirm the finalized buttress rebar cage shop drawings via RFI because the shop drawings have already been approved in a previous submittal TG0300-320 / TA1020-032001A05.

Attached are the revised shop drawings that incorporate all the changes that were agreed upon in the referenced RFIs. Please confirm that these shop drawings accurately reflects all changes made.

Note that review is only for general conformance with the design concept of the project and general compliance with the information given in the contract documents. Contractor is responsible for quantities and dimensions which shall be confirmed and correlated at the job site; checking for deviations between the field, submittal and the contract documents alerting Arup of same; fabrication processes and techniques; the means and methods of construction; coordination of its work with that of all other trades; and performing all work in a safe and satisfactory manner. This review does not modify contractor¿s duty to comply with the contract documents and any action shown is subject to requirements of plans and specifications. This review does not increase Arup's standard of care or scope of services and contractor shall immediately notify Arup of any intent to make a claim based on this submittal.

T-0217 **BSE - Buttress Shift To The East** **Closed** **08/24/2011** **09/03/2011** **08/30/2011** **Potentially** ☐

From: Webcor Construction LP Nhi Tran **To:** Turner Construction Compan Gary Krutsch **Answered By:** Adamson Associates, Inc George Metzger

Co-Author: Balfour Beatty Infrastructure, Inc. Ural Yal

REQUEST:

Reference RFI #T-0183.1, Sheet GT-2201, Specification Section 31 63 29, and attached sketch

The sketch that was included in the Engineer's response to RFI T-0183.1 shows Buttress rows S, T, U, V, and W, shifting 4" to the west. Per discussions with the Engineer in the 8/17/2011 TG03 BSE Design Team Meeting, all parties agreed that the 4" shift is not needed. Please confirm that the 4" shift is not necessary and that it is acceptable to install the Buttress shafts per the attached drawing.

SUGGESTION:

ANSWER: **Accept Suggestion:** ☐

ARUP Response: The proposed northings and eastings shown are acceptable.

T-0217.1 **BSE - Maximum Allowable Spacing Between Buttress Shafts** **Closed** **03/23/2012** **04/02/2012** **03/23/2012** **Potentially** ☐

From: Balfour Beatty Infrastructure, Inc. Ural Yal **To:** Turner Construction Compan Gary Krutsch **Answered By:** Adamson Associates, Inc George Metzger

Number	Subject	Status	Date Created	Date Required	Date Answered	Cost Impact	Proceed

Co-Author:

REQUEST:

Becho requests for ARUP to provide the maximum allowed spacing between the tangent shafts East of P-Line and West of C-Line. Allowing such changes could possibly help mitigate Buttress Shaft schedule.

SUGGESTION:

ANSWER: **Accept Suggestion:** ☐

The tangential spacing of the buttress shafts may be increased from 4 inches to 8 inches east of PLine and west of C-Line.

Contractor to verify that this does not impact the trestle pile locations / design.

Contractor to verify tht there is adequate equipment clearance at 301 Mission.

Contractor to provide revised northing and easting coordiantes in a sketch similar to that incuded in RFI 217 for tie-down location coordination.

T-0217.2 **BSE - Increased Spacing Between Buttress Shafts east of P-line** **Closed** **04/12/2012** **04/22/2012** **04/19/2012** **Potentially** ☐

From: Balfour Beatty Infrastructure, Inc. Ural Yal **To:** Turner Construction Compan Gary Krutsch **Answered By:** Adamson Associates, Inc George Metzger

Co-Author:

REQUEST:

Reference: BBII Spacing Sketch

Per the Engineer's response to RFI T-0217.1, "The tangential spacing of the Buttress shafts may be increased from 4" to 8" east of P-line and west of C-line." Please confirm that the revised Buttress footprint and coordinates shown on the attached sketch is acceptable.

SUGGESTION:

ANSWER: **Accept Suggestion:** ☐

ARUP Response:

Confirmed except that the coordinates for shafts A1 and A3 do not appear to reflect RFI 217.1.

T-0218 **BSE - Timber Lagging Underneath Instrument Protection Slab** **Closed** **08/29/2011** **09/08/2011** **08/31/2011** **Potentially** ☐

From: Webcor Construction LP Nhi Tran **To:** Turner Construction Compan Gary Krutsch **Answered By:** Adamson Associates, Inc George Metzger

Co-Author: Balfour Beatty Infrastructure, Inc. Ural Yal

REQUEST:

Reference RFI #T-0214, Sheet GT-5102, and Specification Section 31 56 13

Contract drawing GT-5102 indicates timber lagging being installed underneath the 2' section of the concrete

SUGGESTION:

ANSWER: **Accept Suggestion:** ☐

ARUP Response: It is acceptable to omit the lagging below the protection slab as proposed. Contractor to take appropriate measures to keep any loose material below the slab from falling into the excavation.

Number	Subject	Status	Date Created	Date Required	Date Answered	Cost Impact	Proceed

instrumentation protection slab between grids 27 and 30. The original construction sequence foresaw the instrumentation protection slab being installed prior to the adjacent buttress work platform. BBII is planning on pouring the instrumentation slab and the adjacent buttress work platform monolithically on Wednesday 8/31/2011, which makes the timber lagging support redundant.

Please confirm that the timber lagging shown on contract drawing GT-5102 is not required to be installed. Your prompt response is highly appreciated.

T-0219 **BSE - Abutments At Temporary Bridges** **Closed** **08/29/2011** **09/08/2011** **09/15/2011** **Potentially** ☐

From: Webcor Construction LP Nhi Tran **To:** Turner Construction Compan Gary Krutsch **Answered By:** Turner Construction Comp Kevin Chiu

Co-Author: Balfour Beatty Infrastructure, Inc. Ural Yal

REQUEST:

Reference Specification Section 01 53 13 and Submittal TG0300-201 Item TZ1030-015313A09 response comments (attached)

DPW review comment #40 on the temporary bridge submittal (TZ1030-015313A09, package TG0300-201) calls for BBII to "provide concrete approach slabs similar to Caltrans." URS comment #32 on the submittal states that "Approach slabs are recommended. After seismic event, it is important that emergency vehicles still have access to these temporary bridges."
Concrete approach slabs are not included as a requirement in the temporary bridge specifications. Please advise if approach slabs must be added to the scope of the temporary bridges.

SUGGESTION:

ANSWER: **Accept Suggestion:** ☐

Per spec 01 53 13 and David Fyfe's response included herein, approach slabs are necessary items required to provide a coordinated design and a completely functional temporary bridge.

2011-09-14 - David Fyfe

SF DPW requires approach slabs.

T-0219.1 **BSE - Approach Slabs At Temporary Bridges** **Closed** **11/04/2011** **11/14/2011** **11/16/2011** **Potentially** ☐

From: Webcor/Obayashi Joint Venture Nhi Tran **To:** Turner Construction Compan Gary Krutsch **Answered By:** URS Corporation David Fyfe

Co-Author:

REQUEST:

Reference RFI#T-0219 and Specification Section 01 53 13

SUGGESTION:

ANSWER: **Accept Suggestion:** ☐

Comments made by PMPC in across the table

Number	Subject	Status	Date Created	Date Required	Date Answered	Cost Impact	Proceed

On 11/3/11 W/O was informed by PMPC during a temporary bridge coordination meeting that contrary to RFI response T-0219 approach slabs were not required at the (3) temporary bridges.

Please confirm.

discussions shall not be considered as modifying the response to RFI# T-0219. As an added clarification to RFI# T-0219, please note that the permitting agency, SF DPW, has expressed the potential need for use of approach slabs to achieve a package which can be approved by the agency. It is recommended that requirements concerning approach slabs be addressed between the contractor and the permitting agency during the building permit submission of the Temporary Bridges Package.

T-0220 **BSE - Pile Extraction Method For The Remaining Timber Piles At GL 33.5 J** **Closed** **08/29/2011** **09/08/2011** **09/02/2011** **Potentially** ☐

From: Webcor Construction LP Nhi Tran **To:** Turner Construction Compan Gary Krutsch **Answered By:** Turner Construction Comp Jack Adams

Co-Author: Balfour Beatty Infrastructure, Inc. Ural Yal

REQUEST:

Reference RFI#T-0188.1, Specification Section 02 41 19, and attached sketch

BBII intends on extracting the remainder of the existing timber piles located at gridline 33.5J/Beale St., using the method approved in T-0188.1, as the piles are located a considerable distance from the 199 Fremont building. This involves extracting piles using the vibratory hammer without a steel casing and backfilling the void with structural pre trench sand. Attached is a drawing indicating the locations of the piles obstructing the CDSM wall. Please confirm that this is acceptable.

SUGGESTION:

ANSWER: **Accept Suggestion:** ☐

We recommend that the procedure for removing the piles east of Beale Street follow the procedure described in our response to RFI T-0146.4 with the exception that backfilling with sand is acceptable. See also answer to RFI T-199.

T-0221 **BSE - Salvage Steel At Temporary Bridges** **Closed** **08/29/2011** **09/08/2011** **09/30/2011** **Potentially** ☐

From: Webcor Construction LP Nhi Tran **To:** Turner Construction Compan Gary Krutsch **Answered By:** URS Corporation Carolina Aguilar

Co-Author: Balfour Beatty Infrastructure, Inc. Ural Yal

REQUEST:

Reference Specification Section 01 53 13 and Submittal TG0300-201 Item TZ1030-015313A09 response comments (attached)

SUGGESTION:

ANSWER: **Accept Suggestion:** ☐

In order to evaluate compliance, additional information is required. Please submit list of all structural steel members that will be used on each of the three temporary bridges. For each structural steel member

Number	Subject	Status	Date Created	Date Required	Date Answered	Cost Impact	Proceed

DPW review of the temporary bridges submittal (TZ1030-015313A09, package TG0300-201) includes comment #8 that states "salvage materials are not acceptable to be used as structural members for the bridges. The temporary bridge specifications do allow for the use of salvage material as follows:

"2. Steel, Salvage Material: Submit coupon tests for mechanical properties and chemical tests for determination of weldability. For steel materials which are recycled from prior Projects (salvaged materials) and are to be incorporated into temporary works, testing shall be performed on a random sampling basis as follows:
a. Where material properties relied upon for design corresponding to minimum yield strength fy=30,000 psi, sampling shall be performed on 5% of each major series of structure element type.
b. Where material properties corresponding to minimum yield strength fy=36,000 psi, sampling shall be performed on 10% of each major series of structure element type.
c. Where material properties corresponding to minimum yield strength fy=42,000 psi or 50,000 psi is used, sampling shall be performed on 20% of each major series of structure element type.
d. Testing performed per subparagraphs above at sampling rates of 5%, 10%, and 20%, respectively, shall be reported to the Owner's Representative in writing. Testing results must satisfy all samples meeting 100% of materials strength requirements for acceptance of salvage materials. If less than 100% of materials tested meet this requirement, then the sampling rate shall be increased. In this event, the sampling rate for retesting shall be subject to review and approval by the Owner's Representative."

Please advise if salvage material is still acceptable per the project specifications.

listed:

1). Indicate whether the structural steel member consists of new or salvaged material

2). Provide the exact location along the bridge that the steel member is located

3). Provide information on the salvaged material, such as its current condition, when and where it may be inspected by a TJPA Representative, and what its prior use was

4). For each complete temporary bridge, provide the total weight of salvage steel, summarized by element type and usage.

Finally, please provide the weight of total salvaged steel material that will be used at each temporary bridge.

T-0222 **BSE - Temporary Bridge Pier Locations** **Closed** **08/29/2011** **09/08/2011** **09/01/2011** **Potentially** ☐

From: Webcor Construction LP Nhi Tran **To:** Turner Construction Compan Gary Krutsch **Answered By:** Adamson Associates, Inc George Metzger

Co-Author: Balfour Beatty Infrastructure, Inc. Ural Yal

REQUEST: **SUGGESTION:** **ANSWER:** **Accept Suggestion:** ☐

Number	Subject	Status	Date Created	Date Required	Date Answered	Cost Impact	Proceed

Reference Specification Section 01 53 13 and Submittal TG0300-201 Item TZ1030-015313A09 response comments (attached)

Temporary bridge review comments (Submittal TZ1030-015313A09, package TG0300-201) call for the end piers on all three bridges to be relocated to avoid interrupting chamfer rebar (see attached markups). With the information provided to BBII in the plans and specifications, there was no indication that this reinforcement must be avoided, nor was there a required clear zone from the shoring wall to the first pier. Please advise if these piers absolutely need to move, or if their current locations can be accommodated. Increasing the span between the abutments and the first pier will have commercial impacts.

Thornton Tomasetti Response: The piers shall not be in conflict with the mat foundation chamfer (chamfer shown in plan and section S1-3201). Minimum clear distance from face of pier to bottom edge of chamfer shall be 2'-0."

8/31/2011 George Metzger
ARUP Response: Arup takes no exception to the referenced pier locations that are shown in the submittal.

T-0223 **BSE - Temporary Bridge Pedestrian Barrier Height** **Closed** **08/30/2011** **09/09/2011** **09/27/2011** **Potentially** ☐

From: Webcor Construction LP Nhi Tran **To:** Turner Construction Compan Gary Krutsch **Answered By:** URS Corporation David Fyfe

Co-Author: Balfour Beatty Infrastructure, Inc. Ural Yal

REQUEST:

Reference Specification Section 01 53 13 and Submittal TG0300-201 response comments (attached)

DPW review of the temporary bridges includes comment #42 that calls for the pedestrian barrier to be designed as a combination railing with a minimum height of 4'-6" while the specifications only call for a 3'-6" barrier. Please advise if the minimum height must be increased to 4'-6".

SUGGESTION:

ANSWER: **Accept Suggestion:** ☐

Response to RFI No.T-0223 is provided herein and on attached sketch titled, "Sketch - RFI Nos.T-0223 and T-0228." This attached sketch is a mark-up of BBII's traffic plan figure, "Non-Working Hours, Temporary Bridge Traffic Plan" (submittal package TG0300-204, submittal item TZ1030-015313, page 3 of 6) because this is the latest presentation of the Contractor proposed product.

This attached sketch shows an installation in conformance with current coordination comments completed between the Project and CCSF DPW and SFMTA. Where the handrail/guardrail system occurs separating pedestrian and vehicle traffic, required height equals 3'-6" measured from the top of pedestrian walking surface.

Note, these comments provided on this attached sketch pertain only to RFI Nos.T-0223 and T-0228, a full review and response of Traffic Plan Submittal

Number	Subject	Status	Date Created	Date Required	Date Answered	Cost Impact	Proceed

Package TG0300-204 will be finalized and transmitted at a later date.

T-0224 **BSE - Temporary Bridge Deflection and Suspended Utilities** **Closed** **08/30/2011** **09/09/2011** **09/09/2011** **Potentially** ☐

From: Webcor Construction LP Nhi Tran **To:** Turner Construction Compan Gary Krutsch **Answered By:** AECOM Technical Servic Eric Zagol

Co-Author: Balfour Beatty Infrastructure, Inc. Ural Yal

REQUEST:

Reference Specification Section 01 53 13 and attached cut sheets

Where utilities transition from direct bury to hanging under the temporary bridges, BBII believes there must be some allowance for deflection to prevent damage to the conduits during a seismic event. Attached are cut sheets for an expansion fitting and deflection fitting that BBII has seen used in combination at bridge transitions. Watertight flexible steel conduit may be an option as well.
Please confirm that all Phase 2 utilities to be suspended below the temporary bridges will include some means of handling bridge deflection.

SUGGESTION:

ANSWER: **Accept Suggestion:** ☐

Please provide information on the predicted movement and hanger support system such that the condition can be assessed.
Movement direction; lateral or longitudinal?
How much movement is being predicted and at what location?
Are the steel conduits rigidly connected to the hanger supports? Please provide the hanger support design for review.

T-0224.1 **BSE - Temporary Bridge Deflection and Suspended Utilities** **Closed** **09/23/2011** **10/03/2011** **09/27/2011** **Potentially** ☐

From: Webcor Construction LP Nhi Tran **To:** Turner Construction Compan Gary Krutsch **Answered By:** AECOM Technical Servic Eric Zagol

Co-Author: Balfour Beatty Infrastructure, Inc. Ural Yal

REQUEST:

Reference RFI #T-0224, Specification Section 01 53 30, and attached e-mails

The response to RFI T-0224 requested additional information about bridge movements. This information was provided by email to AECOM on 9/9/11. Follow on questions were answered on 9/15/11. Please see the attached email string.

Please provide the make, model, location and quantity per conduit run for all the utilities supported by the bridge

SUGGESTION:

ANSWER: **Accept Suggestion:** ☐

In reference to the request in RFI T-0224, it has been confirmed that all Phase 2 utilities (Verizon and PG&E) to be suspended below the temporary bridges will include means of handling bridge deflection.

Verizon has indicated the use of O-Z/GEDNEY expansion fittings for rigid steel conduit type EX, or equal. One fitting is proposed on each conduit located along the supported section staggered such that no two are aligned. This design element will be incorporated into construction documents being prepared by Verizon.

Number	Subject	Status	Date Created	Date Required	Date Answered	Cost Impact	Proceed

PG&E has indicated the use of O-Z/GEDNEY Expansion fittings for rigid steel conduit type EX, or equal. One fitting is proposed on each conduit located along the supported section staggered such that no two are aligned. This design element will be incorporated into construction documents being prepared by PG&E.

T-0224.2 **BSE - Temporary Bridge Deflection and Suspended Utilities** **Closed** **10/05/2011** **10/15/2011** **10/12/2011** **Potentially** ☐

From: Webcor Construction LP Masashi Kojima **To:** Turner Construction Compan Gary Krutsch **Answered By:** AECOM Technical Servic Eric Zagol

Co-Author: Balfour Beatty Infrastructure, Inc. Ural Yal

REQUEST:

Reference RFI T-224, 224.1, CR T-017 and Specification Section 01 53 30

The response to RFI T-0224.1 The 4" EX model is not readily available (8 week lead time), however the very similar AX is. Please see the attached data sheets for each model and advise if this revised material is acceptable.

SUGGESTION:

ANSWER: **Accept Suggestion:** ☐

Response from PG&E (attached) is as follows:

The type AX expansion fitting for 4" steel conduits is an acceptable substitute for the type EX expansion fitting. Type BJ external bonding jumper will still be required.

T-0224.3 **BSE - Temporary Bridge Deflection and Suspended Utilities** **Closed** **10/24/2011** **11/03/2011** **11/08/2011** **Potentially** ☐

From: Webcor Construction LP Nhi Tran **To:** Turner Construction Compan Gary Krutsch **Answered By:** AECOM Technical Servic Eric Zagol

Co-Author: Balfour Beatty Infrastructure, Inc. Ural Yal

REQUEST:

Reference CR T-017R1 and Response to RFI#T-0224.2

BBII have been advise that only 1 deflection fitting is required on per rigid conduit run, between gridline A and J.

The PG&E construction drawings attached, indicate (highlighted in yellow) 2 locations A and J line; request expansion fitting to be used.

It is not clear from the drawings attached if PG&E require 1 deflection fitting per conduit run as previous stated in RFI # T-0224.2. Please confirm only 1 deflection fitting per

SUGGESTION:

ANSWER: **Accept Suggestion:** ☐

1 deflection fitting per conduit run as described in RFI # T-0224.2 is required.

Submit proposed configuration of deflection fittings coordinated with temp bridge supports and other bridge elements for review.

Number	Subject	Status	Date Created	Date Required	Date Answered	Cost Impact	Proceed

conduit run between GL A-J is required by PG&E.

Please provide a drawing showing, the deflection fitting configuration for individual conduit runs.

T-0225 **BSE - CDSM Alignment Conflict With Existing Utilities GL 1-J** **Closed** **08/31/2011** **09/10/2011** **08/31/2011** **Potentially** ☐

From: Webcor Construction LP Nhi Tran **To:** Turner Construction Compan Gary Krutsch **Answered By:** AECOM Technical Servic Eric Zagol

Co-Author: Balfour Beatty Infrastructure, Inc. Ural Yal

REQUEST:

Reference Sheet D-2231, Specification Section 31 56 13, and attached photo

BBII laid out centerline of the CDSM on Gridline 1 and Gridline J. The centerline of the shoring indicates that the existing utilities PG&E/Water is in direct conflict with the location of the CDSM shoring wall. These utilities appear to be capped east of the centerline.

Drawing D-2231 BSE contract states "Unless specified otherwise all utilities have been cut and capped outside the limits of the work by Transbay Transit Centre program relocation of utilities"... Please see photos attached.

Please confirm the status on the relocation of these utilities.

SUGGESTION:

ANSWER: **Accept Suggestion:** ☐

Shoring wall changed per the response to BSE RFI-0017. Basis of the AECOM Plans is the pre RFI-0017 shoring wall. We are planning to issue revisions to TJPA early next week to address the shoring wall change.

T-0225.1 **BSE - CDSM Alignment Conflict With Existing Utilities GL 1-J** **Closed** **08/31/2011** **09/10/2011** **09/09/2011** **Potentially** ☐

From: Webcor Construction LP Nhi Tran **To:** Turner Construction Compan Gary Krutsch **Answered By:** AECOM Technical Servic Eric Zagol

Co-Author: Balfour Beatty Infrastructure, Inc. Ural Yal

REQUEST:

Reference RFI#T-0225

The response received for RFI #T-0225 does not provide the requested information.

SUGGESTION:

ANSWER: **Accept Suggestion:** ☐

Status is as follows, RUP ASI-015 has been created to address the relocation of utilities impacted by the change to the CDSM shoring wall resulting from BSE RFI-0017. ASI-015 was issued for pricing and implementation on 9/8/11.

Number	Subject	Status	Date Created	Date Required	Date Answered	Cost Impact	Proceed

---
Question from RFI#T-0225

Reference Sheet D-2231, Specification Section 31 56 13, and attached photo

BBII laid out centerline of the CDSM on Gridline 1 and Gridline J. The centerline of the shoring indicates that the existing utilities PG&E/Water is in direct conflict with the location of the CDSM shoring wall. These utilities appear to be capped east of the centerline.

Drawing D-2231 BSE contract states "Unless specified otherwise all utilities have been cut and capped outside the limits of the work by Transbay Transit Centre program relocation of utilities"... Please see photos attached.

Please confirm the status on the relocation of these utilities.

T-0225.2 **BSE - CDSM Alignment Conflict GL 1-J - PG&E Vault Utility Conflict on Natoma** **Closed** **09/12/2011** **09/22/2011** **09/14/2011** **Potentially** ☐

From: Webcor Construction LP Nhi Tran **To:** Turner Construction Compan Gary Krutsch **Answered By:** AECOM Technical Servic Eric Zagol

Co-Author: Balfour Beatty Infrastructure, Inc. Ural Yal

REQUEST:

Reference RFI #T-0017, #T-0225.1, Sheet U-1110, and Specification Section 31 56 13

Please refer to RFI No. T-0017, which revised the southwest corner of the CDSM shoring wall alignment. Your attention is also directed to the utility drawing U-1110, which depicts the utilities to be abandoned and the ones to be protected in place with respect to the old CDSM wall alignment. According to U-1110, the PG&E vault on Natoma Street shall be protected in place. However, based on the field layout, the PG&E vault on Natoma St. is in conflict with the southwest corner of the CDSM wall alignment, which was revised per RFI No. T-0017.

Based on BBII's field measurements, the clearance between the PG&E vault on Natoma St. and the centerline

SUGGESTION:

ANSWER: **Accept Suggestion:** ☐

Based on provided field information, the existing PG&E MH is located 11" clear of the CDSM shoring wall revised per resonse to RFI T-0017, please clarify what/where the conflict is.

If safety is of concern while working in close proximity to a live PG&E MH, coordinate with PG&E through TJPA's Representative to de energize the existing MH prior to and during CDSM wall construction. Existing PG&E MH 1348 exists to provide power to 90 Natoma. 90 Natoma is owned by the TJPA and is currently vacant.

The 36" demarcation line mentioned in the RFI is an arbitrary scope division line established between the RUP and BSE packages to differentiate abandon utility removal between the two packages.

Number	Subject	Status	Date Created	Date Required	Date Answered	Cost Impact	Proceed

of the CDSM wall is 29", which is less than the 36" typical distance required by the contract plans as the minimum clearance between the demarcation lines and the CDSM wall alignment.

BBII requests the PG&E vault on Natoma St. to be relocated to a safe distance outside the work limits of the revised CDSM wall alignment.

T-0225.3 **BSE - CDSM Alignment Conflict GL 1-J - PG&E Vault Utility Conflict on Natoma** **Closed** **10/03/2011** **10/13/2011** **10/20/2011** **Potentially** ☐

From: Webcor Construction LP Nhi Tran **To:** Turner Construction Compan Gary Krutsch **Answered By:** Turner Construction Comp Kevin Chiu

Co-Author: Balfour Beatty Infrastructure, Inc. Ural Yal

REQUEST:

Reference RFI #T-0225.2, Sheet D-2231 and ASI-015, Specification Section 31 56 13, and attached photos and sketch

BBII in discussions with DND will be able to work adjacent to PG&E vault #1348, referenced in RFI #T-0225.2.

BBII is currently considering removing the concrete over pour on the vault, de-energizing the power in the vault and installing CDSM Shoring Wall without relocating the vault.

Please confirm it is acceptable to remove any concrete over pour within 20" from the centerline of CDSM wall.

Also, please confirm it is acceptable to install CDSM Wall at the location close to the PG&E vault #1348 without potential damages.

Please refer to the attached photos

SUGGESTION:

ANSWER: **Accept Suggestion:** ☐

It is noted that prior to receiving the response to this RFI, the contractor installed CDSM panel #W0001 adjacent PG&E vault 1348 without chipping away the concrete over pour. A PG&E standby crew was present and observed the installation.

It is understood that during this work the outside tooth of auger may have broken off during install of piles in this area. W/O to confirm there is no damage to Vault #1348 due to CDSM work

---

T-0226 **BSE - Revised Instrument Protection Slab** **Closed** **09/02/2011** **09/12/2011** **09/06/2011** **Potentially** ☐

From: Webcor Construction LP Nhi Tran **To:** Turner Construction Compan Gary Krutsch **Answered By:** Adamson Associates, Inc George Metzger

Co-Author: Balfour Beatty Infrastructure, Inc. Ural Yal

REQUEST:

SUGGESTION:

ANSWER: **Accept Suggestion:** ☐

Number	Subject	Status	Date Created	Date Required	Date Answered	Cost Impact	Proceed

Reference RFI #T-0214 and attached sketch

Per discussion with the engineer, it is acceptable to install the Instrument Protection Slab per the attached sketch and the following revisions to RFI T-0214:

1. W-beams cut so that the top mat will be resting on them.
2. #6 rebar thru the W-beam, tie-wired to the top mat in lieu of Nelson Studs.

Please confirm.

ARUP Response:

This is acceptable.

T-0227 **BSE - Buttress Anti-Washout Admixture** **Closed** **09/02/2011** **09/12/2011** **09/08/2011** **Potentially** ☐

From: Webcor Construction LP Nhi Tran **To:** Turner Construction Compan Gary Krutsch **Answered By:** Adamson Associates, Inc George Metzger

Co-Author: Balfour Beatty Infrastructure, Inc. Ural Yal

REQUEST:

Reference Specification Section 03 30 01 and attached Rheomac product data

Per the recommendations from both Becho and Central Concrete, BBII would like to propose the use of an Anti-Washout Admixture, Rheomac UW 540 in all submitted and approved Buttress Primary and Secondary Shaft Concrete. Please review and confirm that this is acceptable.

SUGGESTION:

ANSWER: **Accept Suggestion:** ☐

ARUP Response:
This is acceptable.

T-0228 **BSE - 6-inch Sidewalk At Temporary Bridges** **Closed** **09/02/2011** **09/12/2011** **09/27/2011** **Potentially** ☐

From: Webcor Construction LP Nhi Tran **To:** Turner Construction Compan Gary Krutsch **Answered By:** URS Corporation David Fyfe

Co-Author: Balfour Beatty Infrastructure, Inc. Ural Yal

REQUEST:

Reference Specification Section 01 53 13 and attached sketches

During a temporary bridge traffic coordination meeting on 8/29/11, SFMTA suggested the use of a 6" elevated

SUGGESTION:

ANSWER: **Accept Suggestion:** ☐

Response to RFI No.T-0228 is provided herein and on attached sketch titled, "Sketch - RFI Nos.T-0223 and T-0228." This attached sketch is a mark-up of BBII's traffic plan figure "Non-Working Hours, Temporary Bridge Traffic Plan," (submittal package TG0300-204,

Number	Subject	Status	Date Created	Date Required	Date Answered	Cost Impact	Proceed

sidewalk curb in lieu of the crash rated pedestrian barrier. The crash rated barrier would be relocated to the outside edge of the temporary bridge.

BBII believes this layout has numerous advantages and resolves some concerns as well:
- SFMTA brought up the obvious concern of damage to side mirrors with tall barriers directly adjacent to the traveled lanes. To compensate for this, drivers will shy away from barriers in already tight lanes. Moving the barrier alleviates this problem on one side of the road.
- A barrier between the sidewalk and traveled lanes has a blunt ends that pose a hazard (see sketch). Relocating the barrier eliminates this hazard.
- The area formerly occupied by the pedestrian barrier (approx 14" in width) can be used as extra traveled width for vehicles (distributed per SFMTA's discretion)
- An elevated sidewalk curb will make trestle crossings feel like a typical street crossing, especially for the visually impaired. As such, pedestrians will be more likely to treat the trestle intersection as a
true signalized intersection.

SFMTA has indicated that the elevated sidewalk is preferred over a pedestrian barrier. Attached are several sketches of the proposed layout - please confirm this is acceptable.

submittal item TZ1030-015313, page 3 of 6) because this is the latest presentation of the Contractor proposed product.

This attached sketch shows an installation in conformance with current coordination comments completed between the Project and CCSF DPW and SFMTA. As shown on attached Sketch - RFI Nos.T-0223 and T-0228, a handrail/guardrail providing separation of pedestrian and vehicle traffic is required.

Note, these comments provided on the attached sketch pertain only to RFI Nos.T-0223 and T-0228, a full review and response of Traffic Plan Submittal Package TG0300-204 will be finalized and transmitted at a later date.

T-0229 **BSE - Concrete Time of Discharge Requirement** **Closed** **09/06/2011** **09/16/2011** **09/08/2011** **Potentially** ☐

From: Webcor Construction LP Nhi Tran **To:** Turner Construction Compan Gary Krutsch **Answered By:** Adamson Associates, Inc George Metzger

Co-Author: Balfour Beatty Infrastructure, Inc. Ural Yal

REQUEST:

Reference Specification 03 30 01

Per SS 03 30 00, 3.3.D, "Discharge of concrete shall be completed within 1½ hours or before the drum has revolved 300 revolutions, whichever comes first, after the introduction of the mixing water to the cement and aggregates or the introduction of the cement to the aggregates."

SUGGESTION:

ANSWER: **Accept Suggestion:** ☐

ARUP Response:
This is acceptable.

Number	Subject	Status	Date Created	Date Required	Date Answered	Cost Impact	Proceed

Per ACI 301 (Section 4.1.2.9), "Time of discharge - When it is desired to exceed the maximum time for discharge of concrete permitted by ASTM C 94C/ 94M, submit a request along with a description of the precautions to be taken."

BBII is planning for discharging concrete with the following precautions: As concrete hydration can be controlled for a maximum of 10 hours, BBII suggests discharge of concrete shall not be restricted to 1½ hours. In order to sustain the requirements of Becho, BBII purposes to replace the 1½ hour time restriction to 3 hours with an 80° F maximum temperature requirement.

Please confirm that this discharging plan is acceptable for Buttress Concrete per ACI 301.

T-0230 **BSE - Concrete Sampling Location** **Closed** **09/12/2011** **09/22/2011** **09/16/2011** **Potentially** ☐

From: Webcor Construction LP Nhi Tran **To:** Turner Construction Compan Gary Krutsch **Answered By:** Turner Construction Comp Kevin Chiu

Co-Author: Balfour Beatty Infrastructure, Inc. Ural Yal

REQUEST:

Reference Specification Section 03 30 01

Per the Pre-Construction Buttress Shoring Phase 1 DFOW Meeting on 8/30/2011, BBII proposes to conduct concrete sampling of Central Concrete Trucks in Lot P in lieu of Zone 4 due to site congestion and safety concerns. In order to sustain the requirements of Becho and to provide safe disposal of concrete for sampling, BBII purposes Lot P for all concrete sample inspections.

Please confirm that this is acceptable.

SUGGESTION:

ANSWER: **Accept Suggestion:** ☐

The Contractor shall bear all additional costs associated with changing the concrete sampling location from Zone 4 to Lot P (including, but not limited to, additional inspectors)

2011-09-15 George Metzger

ARUP Response:

Arup takes no exception to sampling the trucks in Lot P provided the concrete is sampled and tested in accordance with the ASTM Standards. For example, in accordance with the Standards, sampling of the concrete shall be obtained after 10 % and before 90 % of the batch has been discharged from the truck.

Webcor/Obayashi Joint Venture

PROJECT MANAGEMENT - REQUEST AND ANSWERS LOG

30100 - Transbay Transit Center Project

Number	Subject	Status	Date Created	Date Required	Date Answered	Cost Impact	Proceed
T-0231	**BSE - 24-Hour Inspection of Buttress Shoring Shaft**	**Closed**	**09/12/2011**	**09/22/2011**	**09/12/2011**	**Potentially**	☐

From: Webcor Construction LP Nhi Tran **To:** Turner Construction Compan Gary Krutsch **Answered By:** Turner Construction Comp Kevin Chiu

Co-Author: Balfour Beatty Infrastructure, Inc. Ural Yal

REQUEST:

Reference Specification Section 03 30 01

Per the Pre-Construction Buttress Shoring Phase 1 DFOW Meeting on 8/30/2011, Becho requests that a TJPA representative be available to observe the 24 hour Buttress Shoring drilling operation and to perform any/all specified inspections. This includes: verticality of shaft, shaft cleanliness, verification of bed rock, concrete and rebar. In addition, Becho requests that a TJPA representative be available 24 hours of the day to provide Becho/BBII with full support and contact information of all available representatives.

Please confirm that this is acceptable.

SUGGESTION:

ANSWER: **Accept Suggestion:** ☐

TJPA Representatives will be available to inspect the work as specified in 31 63 29 (referenced in 03 30 01).

T-0232	**BSE - Buttress Red Color Concrete**	**Closed**	**09/15/2011**	**09/25/2011**	**09/16/2011**	**Potentially**	☐

From: Webcor Construction LP Nhi Tran **To:** Turner Construction Compan Gary Krutsch **Answered By:** Adamson Associates, Inc George Metzger

Co-Author: Balfour Beatty Infrastructure, Inc. Ural Yal

REQUEST:

Reference Specification Section 03 30 01 and Sheet GT-2201

Per discussion with the Engineer, it is acceptable to place red color concrete in Secondary Buttress Shafts C3 and C5 in lieu of Primary Buttress Shafts C2, C4, and C6.

Please confirm this is acceptable.

SUGGESTION:

ANSWER: **Accept Suggestion:** ☐

ARUP Response:

This is acceptable.

T-0233	**BSE - Internal Bracing Design Coordination with Structural Design**	**Closed**	**09/20/2011**	**09/30/2011**	**09/23/2011**	**Potentially**	☐

From: Webcor/Obayashi Joint Venture Masashi Kojima **To:** Turner Construction Compan Gary Krutsch **Answered By:** Adamson Associates, Inc George Metzger

Co-Author:

REQUEST:

Reference Specification Section 31 55 00

The BSE submittal TG0300-542.1 Internal Bracing Design was approved by TJPA and the fabrication will start as soon as permission is issued by the City.

SUGGESTION:

ANSWER: **Accept Suggestion:** ☐

Thornton Tomasetti's response is pending receipt and review of revised internal bracing submittal.

Number	Subject	Status	Date Created	Date Required	Date Answered	Cost Impact	Proceed

Please confirm the design was acceptable to permanent structural designer (Thornton Tomasetti) and incorporated into their design for future trade packages.

T-0233.1 **BSE - Internal Bracing Design Coordination with Structural Design** **Closed** **09/23/2011** **10/03/2011** **10/03/2011** **Potentially** ☐

From: Webcor Construction LP Nhi Tran **To:** Turner Construction Compan Gary Krutsch **Answered By:** Adamson Associates, Inc George Metzger

Co-Author:

REQUEST:

Reference RFI #T-0233 and TJPA Transmittal No. 140-02321

The SFDBI-approved Internal Bracing drawings and related calculations was sent to W/O on 9/22/2011 as TJPA Transmittal No. 140-02321 - Approved Internal Bracing for Shoring Wall Permit Drawings, and available in Constructware.

RFI #T-0233 Question:

The BSE submittal TG0300-542.1 Internal Bracing Design was approved by TJPA and the fabrication will start as soon as permission is issued by the City.

Please confirm the design was acceptable to permanent structural designer (Thornton Tomasetti) and incorporated into their design for future trade packages.

SUGGESTION:

ANSWER: **Accept Suggestion:** ☐

TT is currently reviewing the Internal Bracing Design Documents, which was received by TT on 09/29/2011.

TT's comments to this document will be marked up on the Internal Bracing Design Document.

T-0233.2 **BSE - Internal Bracing Design Coordination with Structural Design** **Closed** **10/05/2011** **10/15/2011** **10/10/2011** **Potentially** ☐

From: Webcor Construction LP Masashi Kojima **To:** Turner Construction Compan Gary Krutsch **Answered By:** Adamson Associates, Inc George Metzger

Co-Author:

REQUEST:

Reference RFI #T-0233, T-0233.1, Submittal TG0300-542 and TJPA Transmittal No.140-02321.

W/O is in receipt of TJPA Submittal Package #TG0300-

SUGGESTION:

ANSWER: **Accept Suggestion:** ☐

Thornton Tomasetti will be issuing comments to Transmittal #140-02321.

Number	Subject	Status	Date Created	Date Required	Date Answered	Cost Impact	Proceed

542 for the internal bracing from which W/O is proceeding per specification section 01 13 00.
W/O is aware the design team did not review and comment on Transmittal #140-02321 (DBI's comments) to Submittal Package #TG0300-542.
Please confirm no design team changes or comments will be made to Submittal Package #TG0300-542 rather future trade packages.

----- RFI #T-0233.1 Response -----
TT is currently reviewing the Internal Bracing Design Documents, which was received by TT on 09/29/2011.
TT's comments to this document will be marked up on the Internal Bracing Design Document.

----- RFI #T-0233.1 Question -----
The SFDBI-approved Internal Bracing drawings and related calculations was sent to W/O on 9/22/2011 as TJPA Transmittal No. 140-02321 - Approved Internal Bracing for Shoring Wall Permit Drawings, and available in Constructware.

----- RFI #T-0233 Response -----
Thornton Tomasetti's response is pending receipt and review of revised internal bracing submittal.

----- RFI #T-0233 Question -----
The BSE submittal TG0300-542.1 Internal Bracing Design was approved by TJPA and the fabrication will start as soon as permission is issued by the City.
Please confirm the design was acceptable to permanent structural designer (Thornton Tomasetti) and incorporated into their design for future trade packages.

T-0233.3	BSE - Internal Bracing Design Coordination with Structural Design	Closed	10/10/2011	10/20/2011	10/10/2011	Potentially ☐

From: Webcor Construction LP Masashi Kojima **To:** Turner Construction Compan Gary Krutsch **Answered By:** Turner Construction Comp Kevin Chiu

Co-Author:

REQUEST:

Reference RFI #T-0233, T-0233.1, T-0233.2, Submittal TG0300-542 and TJPA Transmittal No.140-02321.

SUGGESTION:

ANSWER: **Accept Suggestion:** ☐

This RFI contains a statement, not a question and is inappropriate for the RFI process.
RFI T-0233.2 will remain closed but unresolved until

Number	Subject	Status	Date Created	Date Required	Date Answered	Cost Impact	Proceed

This RFI shall not be closed until the information / confirmation received from the Design team.

----- RFI #T-0233.2 Response -----
Thornton Tomasetti will be issuing comments to Transmittal #140-02321.

----- RFI #T-0233.2 Question -----
W/O is in receipt of TJPA Submittal Package #TG0300-542 for the internal bracing from which W/O is proceeding per specification section 01 13 00.
W/O is aware the design team did not review and comment on Transmittal #140-02321 (DBI's comments) to Submittal Package #TG0300-542.
Please confirm no design team changes or comments will be made to Submittal Package #TG0300-542 rather future trade packages.

----- RFI #T-0233.1 Response -----
TT is currently reviewing the Internal Bracing Design Documents, which was received by TT on 09/29/2011.
TT's comments to this document will be marked up on the Internal Bracing Design Document.

----- RFI #T-0233.1 Question -----
The SFDBI-approved Internal Bracing drawings and related calculations was sent to W/O on 9/22/2011 as TJPA Transmittal No. 140-02321 - Approved Internal Bracing for Shoring Wall Permit Drawings, and available in Constructware.

----- RFI #T-0233 Response -----
Thornton Tomasetti's response is pending receipt and review of revised internal bracing submittal.

----- RFI #T-0233 Question -----
The BSE submittal TG0300-542.1 Internal Bracing Design was approved by TJPA and the fabrication will start as soon as permission is issued by the City.
Please confirm the design was acceptable to permanent structural designer (Thornton Tomasetti) and incorporated into their design for future trade packages.

the requested information is provided.

Number	Subject	Status	Date Created	Date Required	Date Answered	Cost Impact	Proceed
T-0233.4	**BSE - Internal Bracing Design Coordination with Structural Design**	**Closed**	**10/10/2011**	**10/20/2011**	**10/11/2011**	**Potentially**	☐

From: Webcor Construction LP Masashi Kojima **To:** Turner Construction Compan Gary Krutsch **Answered By:** Turner Construction Comp Kevin Chiu

Co-Author:

REQUEST:

Reference RFI #T-0233, T-0233.1, T-0233.2, Submittal TG0300-542 and TJPA Transmittal No.140-02321.

When will the Design team provide the information / confirmation for RFI #T-0233?

----- RFI #T-0233.3 Response -----
This RFI contains a statement, not a question and is inappropriate for the RFI process. RFI T-0233.2 will remain closed but unresolved until the requested information is provided.

----- RFI #T-0233.3 Question -----
This RFI shall not be closed until the information / confirmation received from the Design team.

----- RFI #T-0233.2 Response -----
Thornton Tomasetti will be issuing comments to Transmittal #140-02321.

----- RFI #T-0233.2 Question -----
W/O is in receipt of TJPA Submittal Package #TG0300-542 for the internal bracing from which W/O is proceeding per specification section 01 13 00.
W/O is aware the design team did not review and comment on Transmittal #140-02321 (DBI's comments) to Submittal Package #TG0300-542.
Please confirm no design team changes or comments will be made to Submittal Package #TG0300-542 rather future trade packages.

----- RFI #T-0233.1 Response -----
TT is currently reviewing the Internal Bracing Design Documents, which was received by TT on 09/29/2011.
TT's comments to this document will be marked up on the Internal Bracing Design Document.

----- RFI #T-0233.1 Question -----
The SFDBI-approved Internal Bracing drawings and related calculations was sent to W/O on 9/22/2011 as TJPA Transmittal No. 140-02321 - Approved Internal Bracing for Shoring Wall Permit Drawings, and available in Constructware.

----- RFI #T-0233 Response -----

SUGGESTION:

ANSWER: **Accept Suggestion:** ☐

Comments will be returned by 14 October 2011.

Number	Subject	Status	Date Created	Date Required	Date Answered	Cost Impact	Proceed

Thornton Tomasetti's response is pending receipt and review of revised internal bracing submittal.

----- RFI #T-0233 Question -----
The BSE submittal TG0300-542.1 Internal Bracing Design was approved by TJPA and the fabrication will start as soon as permission is issued by the City.
Please confirm the design was acceptable to permanent structural designer (Thornton Tomasetti) and incorporated into their design for future trade packages.

T-0233.5 **BSE - Internal Bracing Design Coordination with Structural Design** **Closed** **10/17/2011** **10/27/2011** **10/18/2011** **Potentially** ☐

From: Webcor Construction LP Nhi Tran **To:** Turner Construction Compan Gary Krutsch **Answered By:** Turner Construction Comp Gary Krutsch

Co-Author:

REQUEST:

Reference RFI #T-0233, T-0233.1, T-0233.2, T-0233.3, T-0233.4, Submittal TG0300-542 and TJPA Transmittal No.140-02321.

Per response to RFI#T-0233.4, comments from the design team were to be received by October 14, 2011.

Please provide the design team comments and confirmation for RFI #T-0233.

----- RFI #T-0233.4 Response -----
Comments will be returned by 14 October 2011.

----- RFI #T-0233.4 Question -----
Reference RFI #T-0233, T-0233.1, T-0233.2, Submittal TG0300-542 and TJPA Transmittal No.140-02321.

When will the Design team provide the information / confirmation for RFI #T-0233?

----- RFI #T-0233.3 Response -----
This RFI contains a statement, not a question and is inappropriate for the RFI process. RFI T-0233.2 will remain closed but unresolved until the requested

SUGGESTION:

ANSWER: **Accept Suggestion:** ☐

Comments have been sent to W/O previously, see attached transmittal.

Number	Subject	Status	Date Created	Date Required	Date Answered	Cost Impact	Proceed

information is provided.

----- RFI #T-0233.3 Question -----
This RFI shall not be closed until the information / confirmation received from the Design team.

----- RFI #T-0233.2 Response -----
Thornton Tomasetti will be issuing comments to Transmittal #140-02321.

----- RFI #T-0233.2 Question -----
W/O is in receipt of TJPA Submittal Package #TG0300-542 for the internal bracing from which W/O is proceeding per specification section 01 13 00.
W/O is aware the design team did not review and comment on Transmittal #140-02321 (DBI's comments) to Submittal Package #TG0300-542.

Please confirm no design team changes or comments will be made to Submittal Package #TG0300-542 rather future trade packages.

----- RFI #T-0233.1 Response -----
TT is currently reviewing the Internal Bracing Design Documents, which was received by TT on 09/29/2011. TT's comments to this document will be marked up on the Internal Bracing Design Document.

----- RFI #T-0233.1 Question -----
The SFDBI-approved Internal Bracing drawings and related calculations was sent to W/O on 9/22/2011 as TJPA Transmittal No. 140-02321 - Approved Internal Bracing for Shoring Wall Permit Drawings, and available in Constructware.

----- RFI #T-0233.0 Response -----
Thornton Tomasetti's response is pending receipt and review of revised internal bracing submittal.

----- RFI #T-0233.0 Question -----
Reference Specification Section 31 55 00
The BSE submittal TG0300-542.1 Internal Bracing Design

Number	Subject	Status	Date Created	Date Required	Date Answered	Cost Impact	Proceed

was approved by TJPA and the fabrication will start as soon as permission is issued by the City.

Please confirm the design was acceptable to permanent structural designer (Thornton Tomasetti) and incorporated into their design for future trade packages.

T-0234 **BSE - Buttress Shaft Post Pour Settlement** **Closed** **09/20/2011** **09/30/2011** **09/22/2011** **Potentially** ☐

From: Webcor Construction LP Nhi Tran **To:** Turner Construction Compan Gary Krutsch **Answered By:** Adamson Associates, Inc George Metzger

Co-Author: Balfour Beatty Infrastructure, Inc. Ural Yal

REQUEST:

Reference Sheet GT-2201 and Specification Section 31 63 29

Please be informed that an uncontrolled settlement was observed at Buttress shaft C2, which was poured on Sunday 9/18/2011. The settlement led to the formation of a 13' deep unstable hole on the buttress working pad. After consulting with ARUP representative and W/O's field personnel, BBII/Becho Inc. decided to fill the newly formed hole with concrete to mitigate the settlement risk of the working pad. Additional concrete was poured into the 13' deep hole on Monday 9/19/2011.

Please confirm that pouring additional concrete/CLSM will be considered as an acceptable method, if such settlements will occur during the future installation of the upcoming buttress shafts.

SUGGESTION:

ANSWER: **Accept Suggestion:** ☐

ARUP Response:

The Contractor shall place concrete (or CLSM, where specified) up to the gound surface as specified in the Contract Documents. The Contractor shall employ the means and methods necessary to properly measure the level of concrete before concrete placement is terminated, and to verify that the material at the ground surface is quality concrete rather than the concrete / water / concrete plug mixture that rises to the surface in advance of the quality concrete due to the tremie method. If some consolidation of the concrete occurs over time, then the top of the shaft shall be filled to the ground surface with conrete (or CLSM, where specified).

T-0235 **BSE - Unforeseen Reinforced Concrete Slab at GL 7.5 J** **Closed** **09/20/2011** **09/30/2011** **09/27/2011** **Potentially** ☐

From: Webcor Construction LP Nhi Tran **To:** Turner Construction Compan Gary Krutsch **Answered By:** Transbay PMPC Roger Rothenburger

Co-Author: Balfour Beatty Infrastructure, Inc. Ural Yal

REQUEST:

Reference Sheet D-2210, Specification Section 31 56 13, attached photos and sketch

While excavating a pre trench at gridline 7.5J close to

SUGGESTION:

ANSWER: **Accept Suggestion:** ☐

This slab is a Cal Trans slab and is located within TJPA property limits. The slab is not unknown and is shown in the set of Drawings listed in Section 00-03-31 Part 1.2.D.6 (Existing Condition: Buildings and

Number	Subject	Status	Date Created	Date Required	Date Answered	Cost Impact	Proceed

Natoma Street, BBII uncovered an unforeseen reinforced concrete slab. This slab is 3ft thick, uncovered at grade and a section of it is in the direct line of the proposed CDSM wall. Indicated at this location in drawing D-2210 are grade beams and pile caps which BBII assumes will be encountered under this mat slab. However, this slab is not indicated on contract drawing D-2210.
The concrete shown in contract survey sheet 5 appears to be a concrete driveway and it does not indicate the 3ft thick concrete slab that BBII are encountering. Measurements taken in the field also indicate a larger area than this. The attached photos and drawing indicate the scale of this obstruction. It is required to be removed.

Please advise if this is acceptable.

Improvements - Drawings "Project Plans for Construction from Figth Streeet to Beale Street, 2000" (168 pages). Removal of the slab is acceptable.

9/22/2011 - George Metzger

ARUP Response:

It is Arup's understanding that the slab encountered is a remnant of the Caltrans seismic retrofit work of the previous, now-demolished bus ramps. Therefor, removal of the portion of the slab within the shoring wall alignment is acceptable, but ownership of the property on which the slab is located should be confirmed by the PMPC / TJPA.

T-0236 **BSE - Unforeseen Concrete Section Found at Grid Line 1E** **Closed** **09/22/2011** **10/02/2011** **09/26/2011** **Potentially** ☐

From: Webcor Construction LP Nhi Tran **To:** Turner Construction Compan Gary Krutsch **Answered By:** Adamson Associates, Inc George Metzger

Co-Author: Balfour Beatty Infrastructure, Inc. Ural Yal

REQUEST:

Reference Sheet D-2210 (attached), Specification Section 31 56 13, and attached photos

While DND were drilling at panel 28 and 29 on grid line 1E at the locations of piles 839-843, an unknown section of concrete was encountered. The concrete was found at a depth of 9.5ft. The quantity of concrete is unknown at this point. The concrete is not indicated on contract drawing D-2210. It is in direct conflict with the CDSM shoring wall and must be removed. Shown below [attached] are photos of the debris removed from the excavation.

Please advise on how to proceed.

SUGGESTION:

ANSWER: **Accept Suggestion:** ☐

ARUP Response:

Contract documents require obstacles that may interfere with installation of the CDSM wall to be removed by pre-trenching. The concrete shall be removed.

T-0237 **BSE - Bridge Welding Code** **Closed** **09/26/2011** **10/06/2011** **10/03/2011** **Potentially** ☐

From: Webcor Construction LP Nhi Tran **To:** Turner Construction Compan Gary Krutsch **Answered By:** Turner Construction Comp Kevin Chiu

Co-Author: Balfour Beatty Infrastructure, Inc. Ural Yal

Number	Subject	Status	Date Created	Date Required	Date Answered	Cost Impact	Proceed

REQUEST:

Reference Specification 01 53 30

Temporary Bridge Specification 01 53 13 (1.6H) requires the welding qualifications for the bridges to be in accordance with AWS D1.5 "Bridge Welding Code", however BBII's design was based on AWS D1.1 "Structural Welding Code" as specified in General note 3.2-A4.2 of Sheet SH-0100. BBII and their designer felt AWS D1.1 is more applicable for the temporary bridge structure for the following reasons:

- The members that make up BBII's temporary bridge consists of readily available standard grade mill rolled shapes, comprised of a variety of base metals (A36, A53, A572, A992, A500, and A252) which are joined by simple prequalified joints (fillets). D1.1 provides the flexibility to weld all of these base metals in any combination utilizing prequalified procedures, since they are all in the same base metal group. D1.5 only allows prequalified welding of A709 plate material only.

- BBII's temporary bridge structure contains structural tubing (piers and rails), which D1.5 does not cover tubing

- The bridge as designed has short spans and very simple welded connections. All welds shown are fillet welds (mostly single pass). Additionally there are no complete penetration welds as are typically seen on steel plate girder bridges.

- The life span of these temporary bridges are less than 5 years

- The temporary bridge's intended use and the site specific geometry restraints led to a steel framing design much more similar to a structural steel building than to a typical Highway bridge. The steel columns with angle cross-bracing, and the girders and cap beams as detailed are similar to building with columns and floor beams.

The submittal review did not take exception to the general note specifying D1.1. therefore please confirm it is acceptable to submit weld procedures and welder qualifications per AWS D1.1 as specified by the bridge's Engineer of Record.

SUGGESTION:

ANSWER: **Accept Suggestion:** ☐

ISI Commentary:

"We have been requested to provide a commentary/discussion regarding AWS D1.5-2002 Bridge Welding Code in reference to RFI #T-0237. The scope of our discussion is limited to an interpretation of D1.5 and not to the design/use of welded temporary steel bridges. The RFI's request by BBII is to accept WPSs/WQTRs to AWS D1.1 rather than to AWS D1.5.

Base Materials: Although D1.5 specifies A709 as the approved steel, it also states that other steels may be approved by the Engineer [D1.5 Section 1.2.2].

Fillet Welding: The RFI states all welding to be fillet welds (mostly single pass). D1.5 state fillet welding may be performed, within given limitations, without performing WPS qualification tests [D1.5 Section 2.8.1].

Welder Qualifications: We note that the qualification requirements for both groove and fillet welds are similar between AWS D1.1 and D1.5 with exception of base metal restrictions.

Engineer's Discretions: See Commentary Sections C1.1.2, C1.2.1 and the "Forward" section of D1.5 Pgs. vii and viii."

9/26/2011 - David Fyfe

See Specification Section 01 53 13, 1.6H;

Welding Qualifications: Qualify procedures and personnel according to the following:

1. AWS D1.5/D1.5M, "Bridge Welding Code - Steel."

2. AWS D1.4/D1.4M, "Structural Welding Code - Reinforcing Steel."

Number	Subject	Status	Date Created	Date Required	Date Answered	Cost Impact	Proceed

This does not allow use of AWS D1.1. Comply with paragraph 1.6H requirements.

T-0237.1 **BSE - Bridge Welding Code** **Closed** **10/03/2011** **10/13/2011** **10/03/2011** **Potentially** ☐

From: Webcor Construction LP Nhi Tran **To:** Turner Construction Compan Gary Krutsch **Answered By:** Turner Construction Comp Kevin Chiu

Co-Author:

REQUEST:

Reference RFI #T-0237 and Specification Section 01 53 30

RFI #T-0237 was returned to W/O with two responses regarding the temporary bridge welding. Please clarify which is the governing response or provide one coordinated response.

SUGGESTION:

ANSWER: **Accept Suggestion:** ☐

Response provided in RFI T-0237 by David Fyfe, dated 9/26/2011, is the governing response.

T-0238 **BSE - Zone 1 CDSM Crossing Over Existing Wall** **Closed** **09/26/2011** **10/06/2011** **09/29/2011** **Potentially** ☐

From: Webcor Construction LP Nhi Tran **To:** Turner Construction Compan Gary Krutsch **Answered By:** Adamson Associates, Inc George Metzger

Co-Author: Balfour Beatty Infrastructure, Inc. Ural Yal

REQUEST:

Reference Sheet GT-5101, Specification Section 31 56 13, attached photos and sketch

Please address the following information request from BBII's sub contractor DND:

"The new CDSM shoring wall crosses an existing CDSM wall at 2 locations. Following CR T-005B, both of these crossings are perpendicular to the existing CDSM wall, as shown in Note 1 on GT-5101. Note 1 shows the new wall making a jog to avoid hitting the beams of the existing CDSM wall. The detail shown on contract plan GT-5101 is constructible only if the existing CDSM wall was built exactly as shown, without any room for construction tolerances for both the new and existing wall. Instead of trying to install this section of the CDSM wall according to the detail shown on GT-5101, which would potentially cause damage to the CDSM equipment, DND proposes to

SUGGESTION:

ANSWER: **Accept Suggestion:** ☐

ARUP Response:

This is acceptable provided there is no additional cost to the TJPA.

remove the existing CDSM beams that are in conflict. The contract plan GT-5101 shows two CDSM panels to jog around the existing beam and one offset panel parallel to the new wall.

DND's proposed solution would eliminate the 2 panels in the jog but still maintain the additional offset panel parallel to the wall line. This additional offset panel would act as insurance so a seal is maintained through any deflection caused by the hard in-situ soil mix. This would present a potential cost savings to the project (due to 2 less panels being installed), providing the conflicting beams can be successfully removed.

DND has mobilized a drill rig with an auger to this area to pre-drill the wall prior to the removal of beams. This will substantially reduce the amount of vibration that will be required to remove the beams. DND proposes to utilize the same method at the other wall crossing near Natoma Street. Is this proposed method of removing the existing beams and soil mixing through the existing CDSM wall acceptable?"

Number	Subject	Status	Date Created	Date Required	Date Answered	Cost Impact	Proceed
T-0239	**BSE - Rebar Cages for Deeper Buttress Shafts**	**Closed**	**09/28/2011**	**10/08/2011**	**10/03/2011**	**Potentially**	☐

From: Webcor Construction LP — Nhi Tran
Co-Author: Balfour Beatty Infrastructure, Inc. — Ural Yal
To: Turner Construction Compan — Gary Krutsch
Answered By: Adamson Associates, Inc — George Metzger

REQUEST:

Reference Sheet GT-5202 Detail 12, RFI T-0216, and Approved Rebar Shop Drawings

The approved rebar cages per RFI T-0216 are sized for 241' deep shafts. Rebar cages for shafts C-1 and M-1 have already been released and fabricated. Note that the depth after airlifting of shafts C-2 and M-2 have been 247' and 252.7' respectively. Please advise on how to proceed with the installation of the cages for shafts C-1 and M-1 and with the fabrication of the rest of the cages assuming these shafts extend beyond planned depth.

SUGGESTION:

ANSWER: **Accept Suggestion:** ☐

ARUP Response:

Detail 12/GT-5201 requires the reinforcing steel to be placed up to 1'-0" below the top of the concrete. The top of concrete is shown on GT-5201. Longitudinal bar extensions shall be spliced as needed to achieve this. If the top of the fabricated cage is within 3'-0" of the top of the concrete, no bar extensions are required.

The 24" tie spacing shown on the shop drawings at the setting cage (Drawing SC1) is acceptable at the bar extensions.

Webcor/Obayashi Joint Venture

PROJECT MANAGEMENT - REQUEST AND ANSWERS LOG

30100 - Transbay Transit Center Project

Number	Subject	Status	Date Created	Date Required	Date Answered	Cost Impact	Proceed
T-0240	**BSE - Demo AT&T Duct on Natoma at Second**	**Closed**	**09/29/2011**	**10/09/2011**	**10/07/2011**	**Potentially**	☐

From: Webcor Construction LP Nhi Tran **To:** Turner Construction Compan Gary Krutsch **Answered By:** AECOM Technical Servic Eric Zagol

Co-Author: Balfour Beatty Infrastructure, Inc. Ural Yal

REQUEST:

Reference Sheets U-1110, D-2231, ASI-015, Specification Section 31 56 13, attached email and BBI RFI 222

It was discovered on 9/27/2011 while performing the utility demo for the revised shoring wall alignment (TG03 BSE CR T-005B) issued in ASI 15 that the abandoned AT&T line servicing the demolished buildings on Natoma was never fully abandoned by AT&T. According to the attached email from Huan Huynh of AT&T, AT&T was never notified that these lines needed to be abandoned due to the revised shoring wall alignment of the Transbay Project.

Please confirm when CDSM Shoring Wall can be installed in the area. Currently, BBII is installing the CDSM Shoring Wall on line 1 and the confirmation of the line abandonment is required as quickly as possible to avoid any project delay.

Please also refer to the attached BBI RFI 0222 for this issue

SUGGESTION:

ANSWER: **Accept Suggestion:** ☐

AT&T has de-energized the abandon telecommunications lines referenced in the RFI. Proceed with CDSM wall installation at this location following demolition of existing utilities per RUP contract documents and execution of a USARs.

T-0241	**BSE - Brick Wall at GL 2, J Line In Conflict With The CDSM Wall**	**Closed**	**09/29/2011**	**10/09/2011**	**10/07/2011**	**Potentially**	☐

From: Webcor Construction LP Nhi Tran **To:** Turner Construction Compan Gary Krutsch **Answered By:** Turner Construction Comp Jack Adams

Co-Author: Balfour Beatty Infrastructure, Inc. Ural Yal

REQUEST:

Reference Specification Section 31 56 13 and attached meeting minutes and photos

The brick wall remaining from the 580 Howard building, at grid line 2 J, is protruding into the CDSM wall limits, as noted in BBII's previous RFI #203 (The question was responded by TCCO at the job site meeting on 9/6/2011. Refer to the attached meeting minutes). While attempting to remove, BBII has discovered that the fence and patio pavement are founded on this remaining portion of brick wall. This condition does not allow for the removal of the wall without damage to the fence and patio.

Please provide direction on how to proceed.

SUGGESTION:

ANSWER: **Accept Suggestion:** ☐

1. The 580 Howard courtyard fencing can be removed from the corner because it is owned by TJPA and located on TJPA property.
2. After removal of this corner section of fence, a section of temp fence and signage shall be placed on TJPA property.
3. During demolition of this corner section the temp fence and signage will likely have to move in towards the 580 Property as a safety precaution.
4. The demolition and backfill shall be expedited so that the courtyard can be restored (preferably same day).
5. The temp fence section and signage shall be moved back on to TJPA property until CDSM wall is complete.

Number	Subject	Status	Date Created	Date Required	Date Answered	Cost Impact	Proceed

6. The permanent fence will be reinstalled on TJPA property as soon as possible after CDSM wall installation at the corner.

CR T-5B excluded this scope. These costs will be issued under forthcoming CR.

T-0242 **BSE - Becho's Request For Rock Classification Data** **Closed** **09/29/2011** **10/09/2011** **10/11/2011** **Potentially** ☐

From: Webcor Construction LP Nhi Tran **To:** Turner Construction Compan Gary Krutsch **Answered By:** Webcor Construction LP Nhi Tran

Co-Author: Balfour Beatty Infrastructure, Inc. Ural Yal

REQUEST:

Reference Sheet GT-2201, Specification Section 31 63 29, and attached letter from Becho

Please find attached BBII's sub-contractor Becho's letter that requests the following information:

"... during the drilling of buttress shaft M4 rock socket, at a depth of approximately 250 feet below ground level, Becho encountered rock formations of unmeasured hardness. At a depth of 250 feet, Becho's steel grab, used for rock drilling, fractured under the increased stress. Please see attached photos. The incident occurred between the hours of 9.30 am and 10.00 am on Wednesday, 09.28.11. BBII immediately notified W/O and called for an emergency meeting to discuss the hardness of the rock formation and the status of drilling. During the meeting, Arup confirmed and accepted the 250 foot depth to be adequate and sufficient to stop the rock socket drilling. Immediately, following Arup's confirmation at 11.09 am, Becho proceeded to clean the remaining rock debris from the bottom of the shaft and prep for air lifting operation. The total down time recorded as a result of the incident is 68 minutes, not including adjustments of airlift, tremie pipe and repair of grab.
Please advise, if shafts are to be drilled and excavated to new depths not indicated on plan GT-5201. Becho will need to mobilize additional non-conventional drilling equipment to successfully achieve depths currently being directed to drill to (255 ft). In addition, Becho requests that a soil report be generated containing borings pertaining to

SUGGESTION:

ANSWER: **Accept Suggestion:** ☐

ARUP Response:

Regarding the question: "Please advise, if shafts are to be drilled and excavated to new depths not indicated on plan GT-5201": the specifications note "Depth of piers shown on drawings may vary due to field conditions based upon TJPA's Representative¿s assessment of actual conditions."

The Geotechnical Data Report and the Prototype Test Report, included in the Contract Documents as references, provide sufficient information for the Contractor to plan and execute their work.

Number	Subject	Status	Date Created	Date Required	Date Answered	Cost Impact	Proceed

Zone 4 Buttress drilling operations which include rock classification, strength and location."

T-0243 **BSE - Emergency Exit at 530 Howard GL 10 J** **Closed** **09/29/2011** **10/09/2011** **10/10/2011** **Potentially** ☐

From: Webcor Construction LP Nhi Tran **To:** Turner Construction Compan Gary Krutsch **Answered By:** Turner Construction Comp Kevin Chiu

Co-Author: Balfour Beatty Infrastructure, Inc. Ural Yal

REQUEST:

Reference Specification Section 31 56 13 and attached sketch

Pre-trenching and CDSM wall installation at the rear of the 530 Howard building will have an impact on the accessibility to the emergency exit at that location. In order for the pre trench and the CDSM wall installation to safely proceed past this location, the rear exit must be closed for 1-2 days for each operation. The attached drawing indicates the location of the emergency exit and its proximity to the CDSM wall.

Please confirm if this is acceptable. BBII is available to meet with the property owner to coordinate this work.

SUGGESTION:

ANSWER: **Accept Suggestion:** ☐

Coordination with 530 Howard property management cannot be obtained without specific dates. Once the dates are known, coordinate through Jason Padavich (jpadavich@tcco.com 510-453-8598).

T-0244 **BSE - Request for Additional Geotechnical Data Pertaining To Zone 4** **Closed** **09/29/2011** **10/09/2011** **10/11/2011** **Potentially** ☐

From: Webcor Construction LP Nhi Tran **To:** Turner Construction Compan Gary Krutsch **Answered By:** Adamson Associates, Inc George Metzger

Co-Author: Balfour Beatty Infrastructure, Inc. Ural Yal

REQUEST:

Reference Sheet GT-2201 and Specification Section 31 63 29

Please address the following information request from BBII's sub contractor Becho Inc.:

"... for each of the shafts completed and under construction, Becho has excavated deeper than the elevations shown for boring logs. Becho is requesting soil samples, boring logs, torque requirements, skin friction values, and rock strengths be provided for these depths.

SUGGESTION:

ANSWER: **Accept Suggestion:** ☐

ARUP Response:

The elevation of the bedrock is highly variable as indicated by the contour plan in the Geotechnical Data Report. It is for this reason that the specifications include the requirement: "Excavation and drilling equipment: shall have adequate capacity, including power, torque, and down thrust to advance the temporary casing to the depths shown on the drawings, excavate a hole of both the maximum diameter and to a depth of 20 percent beyond the

Number	Subject	Status	Date Created	Date Required	Date Answered	Cost Impact	Proceed

(Currently 254 ft below elevation +14.00).

The requested information is similar to what was provided up to the depths of 234 and 237.5 feet in the "Final Geotechnical Data Report" prepared by Arup dated February 2010, and "Prototype Test Program and Monitoring During Construction of Drilled Shafts" prepared by Arup dated May 2010. Becho requests this information for drilling beyond the depths specified in the Geotechnical Report."

depths shown on the plans."

T-0244.1 **BSE - Becho Request for Buttress Field Logs** **Closed** **03/23/2012** **04/02/2012** **04/24/2012** **Potentially** ☐

From: Balfour Beatty Infrastructure, Inc. Ural Yal **To:** Turner Construction Compan Gary Krutsch **Answered By:** Adamson Associates, Inc George Metzger

Co-Author:

REQUEST:

BECHO formally requests to obtain the Daily Field Logs from every ARUP field engineer/geotech/geologist, TJPA representative involved with the Buttress Shaft work. More specifically, field notes/logs from engineers and TJPA representatives involved with the field data collection, sample collection and inspection process. Becho requests the Daily Field Logs for the following dates:
- September 12th 2011 through October 20th 2011
- February 22nd 2012 through Today

SUGGESTION:

ANSWER: **Accept Suggestion:** ☐

The TJPA Representative Daily Field Logs are attached to the Field Observation Reports that are posted to and available in Constructware.

T-0244.2 **BSE - Becho Request for Buttress Field Logs Follow-Up** **Closed** **04/18/2012** **04/28/2012** **04/24/2012** **Potentially** ☐

From: Webcor Construction LP David Fields **To:** Turner Construction Compan Gary Krutsch **Answered By:** Turner Construction Comp Gary Krutsch

Co-Author:

REQUEST:

After reviewing Constructware as directed in RFI T-0244.1; W/O is unable to locate ARUP field reports for the dates between 9/12/11-9/30/11. Please advise as to the location of the aformentioned documents.

SUGGESTION:

ANSWER: **Accept Suggestion:** ☐

Per Arup on 04/10/2012, "The first report begins on October 1, 2011. Prior to that, Arup was not documenting the project progress and deficiencies through these field reports."

Webcor/Obayashi Joint Venture

PROJECT MANAGEMENT - REQUEST AND ANSWERS LOG

30100 - Transbay Transit Center Project

Number	Subject	Status	Date Created	Date Required	Date Answered	Cost Impact	Proceed
T-0245	**BSE - Ground Conduits detail for PG&E phase 2 works on First Street**	**Closed**	**10/05/2011**	**10/15/2011**	**10/12/2011**	**Potentially**	☐

From: Webcor Construction LP Masashi Kojima **To:** Turner Construction Compan Gary Krutsch **Answered By:** AECOM Technical Servic Eric Zagol

Co-Author: Balfour Beatty Infrastructure, Inc. Ural Yal

REQUEST:

Reference: CR No. T-017 - BSE - First Street Phase 2 Utility Relocation

For the installation of the PGE 6" and PGE 4" GRS conduit between the CDSM walls, is grounding of the PGE conduits required? If so, please provide grounding details/requirements.

SUGGESTION:

ANSWER: **Accept Suggestion:** ☐

Response from PG&E (attached) is as follows:

Yes and at both ends of the conduits. As a suggestion, we would propose to tie into the bonding jumpers of the AX and EX expansion fittings with a bare copper solid stand #6 copper wire. The #6 wire can be either soldered or crimped to the bonding jumper. All the #6 ground wires would then be brought together and connected to a single bare #2/0 copper wire. The 2/0 copper ground wire would then be routed and cadwelded to the nearest I-beam that support the traffic bridge.

If it is not possible to attached the #6 copper wire to the AX and EX grounding jumpers, we will require a separated bonding clamp that can be used in a wet or dry location.

One grounding point is usually sufficient but I am asking for grounding at both ends of the steel conduits in case one ground is accidentally cut.

T-0246	**BSE - PG&E Sweep Radius Requirements**	**Closed**	**10/10/2011**	**10/20/2011**	**10/11/2011**	**Potentially**	☐

From: Webcor Construction LP Masashi Kojima **To:** Turner Construction Compan Gary Krutsch **Answered By:** Turner Construction Comp Kevin Chiu

Co-Author: Balfour Beatty Infrastructure, Inc. Ural Yal

REQUEST:

Reference CR T-017.

(The attached drawings provided at the PG&E / BBII / Verizon Coordination Meeting on 9/29/2011) refer to 10ft radius elbows and bends. PG&E standards refer require 6ft radius elbows and bends. Please confirm radius requirements for 6" conduit installation for the Phase 2 utility on First Street.

SUGGESTION:

ANSWER: **Accept Suggestion:** ☐

Per PG&E (see attached), the requirement is 10ft radius.

T-0247	**BSE - Proposed Corrective Action Plan for Sunken CDSM Soldier Piles**	**Closed**	**10/10/2011**	**10/10/2011**	**10/12/2011**	**Potentially**	☐

From: Webcor Construction LP Masashi Kojima **To:** Turner Construction Compan Gary Krutsch **Answered By:** Adamson Associates, Inc George Metzger

Co-Author: Balfour Beatty Infrastructure, Inc. Ural Yal

Number	Subject	Status	Date Created	Date Required	Date Answered	Cost Impact	Proceed

REQUEST:

Reference Specification Section 31 56 13

Please address the following information request from BBII's sub contractor DND:
"As of to date, the following three soldier piles have sunk below grade during their placement into the CDSM wall.
- Beam # 154 installed on 09.08.11
- Beam # 631, installed on 09.29.11
- Beam # 602, installed on 10.01.11

DND was unable to recover those piles and set them to their plan elevations without disturbing the adjacent beams that were already in place. To mitigate this issue, DND proposes to conduct the below course of remedial action:
1) Wait until mass excavation commences. Excavate with caution the locations, and determine the top elevation of the sunken beams.
2) Provide this information to the Engineer for evaluation.
3) Implement corrective action based on Engineer's evaluation. Possible corrective measures are:
a. No action necessary. The strength of the CDSM material may be sufficient to support the unreinforced depth.
b. Install lagging between the adjacent beams above the top of the sunken beam.
c. Splice a beam on the top of the sunken beam and backfill with low strength concrete.

Please advise, if the proposed course of remedial action and/or any of the three possible corrective measures are acceptable."

SUGGESTION:

ANSWER: **Accept Suggestion:** ☐

ARUP Response:

The proposed sequence is not acceptable. The Contractor shall submit a corrective action plan at least four weeks prior to the start of excavation for evaluation by the TJPA's Representative. The plan shall assume a range of depths to the top of the sunken beam and shall describe the impact on the waling and strutting plan. The plan shall be location-specific and shall include a drawing indicating the location of the sunken beam.

T-0247.1 **BSE - Proposed Corrective Plan for the following Sunken Solider Piles** **Closed** **01/10/2012** **01/20/2012** **01/12/2012** **Potentially** ☐

From: Webcor/Obayashi Joint Venture Kirk Nielsen **To:** Turner Construction Compan Gary Krutsch **Answered By:** Adamson Associates, Inc George Metzger

Co-Author:

REQUEST:

Reference: Attached Corrective Action Plan

Message:
Please find attached BBII's proposed corrective plan for the following sunken solider piles:

SUGGESTION:

ANSWER: **Accept Suggestion:** ☐

The written RFI above is not a clear question and is not acceptable. The content in the attached document should be provided in a submittal, not an RFI. GC to conform to comments in RFI 247.

Number	Subject	Status	Date Created	Date Required	Date Answered	Cost Impact	Proceed

1. Pile #59, Notice #47, Vela Issue #J-00007.
2. Pile #154, Vela Issue #J-00001.
3. Pile #602, Vela Issue #J-00008.
Please approve and or comment.

T-0248 **BSE - First St. Verizon Utilities Relocation** **Closed** **10/10/2011** **10/20/2011** **01/04/2012** **Potentially** ☐

From: Webcor Construction LP Masashi Kojima **To:** Turner Construction Compan Gary Krutsch **Answered By:** Transbay PMPC Roger Rothenburger

Co-Author: Balfour Beatty Infrastructure, Inc. Ural Yal

REQUEST:

Reference Specification Section 01 53 13

Attached is an as-built sketch of Verizon utilities potholed and located along First St. on 10/4/10. These utilities were originally scheduled to be relocated during phase two to allow for CDSM installation and subsequently temporary bridge construction. BBII has learned that in an effort to save time, the TJPA is considering leaving the utilities in their current locations and working around them. As shown on the attached section of the First St. temporary bridge, the Verizon utilities will be in direct conflict with the temporary bridge structure. Please confirm these utilities will be relocated as planned to allow for installation of the CDSM shoring wall and temporary bridge.

SUGGESTION:

ANSWER: **Accept Suggestion:** ☐

"Yes, they will be relocated. This RFI was related to the lateness of Verizon relocation and the idea of installing CDSM wall with Verizon still in place. Due to delays in starting PGE is now taking longer than Verizon so that PGE work governs duration and we no longer have to install last CDSM wall with Verizon in place to save time on bridge installation on First Street."

Solcom has a start date of 1.03.2012 and a finish date of 2.29.2012.

T-0249 **BSE - Pavement lights at the rear of 580 Howard** **Closed** **10/10/2011** **10/20/2011** **10/12/2011** **Potentially** ☐

From: Webcor Construction LP Masashi Kojima **To:** Turner Construction Compan Gary Krutsch **Answered By:** Turner Construction Comp Kevin Chiu

Co-Author:

REQUEST:

Reference Specification Section 31 56 13 and CR T-005B.

There are two lights located on the ground inside the boundary fence at the rear of 580 Howard. The lights are located 4ft away from the brick wall (which is due to be demolished) as shown the attached photos. A preliminary investigation indicates that the lights are de-energized.

SUGGESTION:

ANSWER: **Accept Suggestion:** ☐

Access to 580 Howard cannot be obtained at this time.

See attached, "RFI T-0249 Field Photos 11 Oct 2011," which shows that as of 2PM on 11 OCT 2011 the lights have been removed and wires capped by an unknown entity.

Number	Subject	Status	Date Created	Date Required	Date Answered	Cost Impact	Proceed

Please confirm that access to the property's electrical system will be available to confirm that the lights are de-energized.

Contractor to verify status of electrical lines by alternate means.

T-0250 **BSE - Soil Classification of South West Area of the Work Site** **Closed** **10/13/2011** **10/23/2011** **11/03/2011** **Potentially** ☐

From: Webcor Construction LP Nhi Tran **To:** Turner Construction Compan Gary Krutsch **Answered By:** Turner Construction Comp Kevin Chiu

Co-Author: Balfour Beatty Infrastructure, Inc. Ural Yal

REQUEST:

Reference Specification Section 01 13 50 and Treadwell & Rollo site maps (attached)

BBII needs the soil classification listed and mapped for the lot between Natoma Street and Howard Street, and between Gridline A to Gridline 10.
Please see the attached Treadwell & Rollo's Site Mitigation Map of the Soil Classification for the area in question.

SUGGESTION:

ANSWER: **Accept Suggestion:** ☐

Treadwell and Rollo response-

"See attached site plan, figure 1. Where encountered, up to 4' of State of California hazardous waste exists."

T-0251 **BSE - Drawings To Coordinate Trestle Pile Locations** **Closed** **10/13/2011** **10/23/2011** **10/14/2011** **Potentially** ☐

From: Webcor/Obayashi Joint Venture Masashi Kojima **To:** Turner Construction Compan Gary Krutsch **Answered By:** Turner Construction Comp Kevin Chiu

Co-Author:

REQUEST:

During the 10/12/11 trestle submittal review meeting, statements were repeatedly made with regard to incrementally complete underground drawings in which to coordinate trestle pile locations. As of 10/13/11, W/O has not received any future package documents accompanied with the direction to coordinate with the TG03 documents. If such documents are available please make available the entire series to include, however not limited to, A, S, M, E, & P.

SUGGESTION:

ANSWER: **Accept Suggestion:** ☐

The question being asked is unclear. Please rephrase the question and resubmit the RFI.

T-0251.1 **BSE - Drawings To Coordinate Trestle Pile Locations** **Closed** **10/14/2011** **10/24/2011** **11/03/2011** **Potentially** ☐

From: Webcor/Obayashi Joint Venture Nhi Tran **To:** Turner Construction Compan Gary Krutsch **Answered By:** Adamson Associates, Inc George Metzger

Number	Subject	Status	Date Created	Date Required	Date Answered	Cost Impact	Proceed

Co-Author:

REQUEST:

RFI T-0251 original inquiry:
During the 10/12/11 trestle submittal review meeting, statements were repeatedly made with regard to incrementally complete underground drawings in which to coordinate trestle pile locations. As of 10/13/11, W/O has not received any future package documents accompanied with the direction to coordinate with the TG03 documents. If such documents are available please make available the entire series to include, however not limited to, A, S, M, E, & P.

RFI T-0251.1 Clarification to RFI T-0251:
The TG03 package was executed with limited documents in which to coordinate future packages with. Please provide all documents the TJPA requests BBII coordinate the TG03 package with and to.

As it pertains to structural columns (round/pill/rectangle/ect.) please provide the minimum clear distance to trestle pile penetrations in the mat slab so BBII may coordinate.

Should there remain any ambiguity in the inquiry above please indicate the nature of misunderstanding.

SUGGESTION:

ANSWER: **Accept Suggestion:** ☐

Thornton Tomasetti Reply:

"See attached PDF files SKS-0130 through SKS-0137 for exclusion zones for trestle and pin pile locations, per requested additional TT review. W/O to review for constructability. Submit updated pile locations for review.

Note:

Penetrations through the Mat slab shall not intersect the hatched zones in the attached sketches. Note hatched zones at and near columns and at side walls.

Any Lower Concourse level penetrations within 3'-0" on either side of primary column lines (e.g. 1.4, 2, ..., 35, V, W, X) will impact construction of primary concrete moment frame beam elements; coordinate with W/O. Block outs in moment frame beams shall not encroach into the hatched zones in the attached sketches.

Coordinate interruptions of lower concourse slabs and secondary framing beam elements with W/O.

24" Diameter columns located 21'-3" west of GL 23 and 21'-3" east of GL 23 along GL D.8 and E.2, extending between mat level and lower concourse level.

Verify construction sequence of Light Column at GL 23 in relation to cross lot bracing and re-bracing; coordinate with W/O.

Penetrations that interrupt Mat reinforcement shall not be placed closer than 3xDia clear spacing between penetrations, with Dia = larger diameter of two adjacent penetrations. Penetrations are those causing interruptions of mat reinforcement in the structure in its final condition. Note especially conflict between pin pile 22 and trestle pile 107 (GL 9), trestle piles 18 and 103 (GL 10), and temporary bridge piers close to pin piles 13 and 14 (GL 34)."

Adamson Associates Note: "The additional A, S, and

Number	Subject	Status	Date Created	Date Required	Date Answered	Cost Impact	Proceed

MEP documents you requested are currently in design progress and the information is not availble at this time."

T-0251.2 **BSE - Drawings To Coordinate Trestle Pile Locations - "No Pin Pile Zone" at Lowe** **Closed** **11/04/2011** **11/14/2011** **11/14/2011** **Potentially** ☐

From: Webcor Construction LP Nhi Tran **To:** Turner Construction Compan Gary Krutsch **Answered By:** Adamson Associates, Inc George Metzger

Co-Author:

REQUEST:

On 11/3/11 W/O was informed by PMPC during an Access Trestle Criteria Discussion meeting with URS and W/O that PMPC will request Thornton Tomasetti to provide "no pine pile zone" sketches for the Lower Concourse Level similar to the Sketches provided through RFI T- 251.1 response. Also, PMPC is requesting Thornton Tomasetti to provide criteria of concrete connection details around pin piles/trestle piles for the future Below Grade Concrete Package.

Please confirm.

SUGGESTION:

ANSWER: **Accept Suggestion:** ☐

TT Response:

The response to RFI T-0251.1 and the associated sketches included criteria for Lower Concourse. As stated in the response, BBII is to coordinate the Lower Concourse framing elements with Webcor. Although the block out at the lower concourse level is a means and methods issue, TT further clarifies the implication of the block out if it affects the primary moment frames along the column grids as noted below:

The primary moment frame girders at the Lower Concourse level are to act as a brace when the Second level braces are removed as shown in the GT drawings. If a complete moment frame girder is not poured due to conflict with the trestle piles, those bracing elements immediately adjacent to that girder will need to remain in place until the blocked-out beam is re-cast and reaches its design strength. Alternatively, BBII shall establish another method of temporary bracing and submit for review.

Concrete connection details around pin piles/trestle piles are included in the Below Grade Package.

T-0251.3 **BSE - Drawings To Coordinate Trestle Pile Locations - "No Pin Pile Zone" at Lowe** **Closed** **11/28/2011** **12/08/2011** **12/13/2011** **Potentially** ☐

From: Webcor Construction LP Nhi Tran **To:** Adamson Associates, Inc. George Metzger **Answered By:** Webcor Construction LP David Fields

Co-Author:

Number	Subject	Status	Date Created	Date Required	Date Answered	Cost Impact	Proceed

REQUEST:

Reference RFI #T-0251.2

So W/O may coordinate as requested in RFI response T-0251.2 please provide a drawing that depicts the column configurations, dimensions, and minimum clearance requirements, for both the platform and concourse levels. This information is required to locate trestle piles and internal bracing struts.

SUGGESTION:

ANSWER: **Accept Suggestion:** ☐

See attached SKS-0138 through SKS-0178 (41 total) for requested
information. Note that these sketches are in progress, for reference only,
and subject to change.
Refer to RFI T-0263 response regarding minimum clearance requirements.

T-0252 **BSE - Buttress Rebar Cage Length Adjustment** **Closed** **10/19/2011** **10/29/2011** **10/24/2011** **Potentially** ☐

From: Webcor Construction LP Nhi Tran **To:** Turner Construction Compan Gary Krutsch **Answered By:** Adamson Associates, Inc George Metzger

Co-Author: Balfour Beatty Infrastructure, Inc. Ural Yal

REQUEST:

Reference RFI #T-0216, #T-0239, Sheet GT-2201, Specification Section 31 63 29, and attached sketch

Per the response to RFI T-0239, BBII needs to extend the length of rebar cages to accommodate buttress shafts that are deeper than 240'. The exact length of the rebar cage cannot be known until the drilling of the adjacent shaft. Due to this uncertainty, and the long lead time required to fabricate cages with varying lengths, BBII proposes to fabricate all rebar cages to a pre-extended length of 260'.

Once the depth of the adjacent shaft is known, the final length of the rebar cage will be adjusted by cutting the top of the rebar cage and the CSL tubes to the desired length. The length of the bottom "structural cage" section that consists of 24 Ea. vertical rebars will remain unchanged at 186'. The length of the top "setting cage" section that consists of 8 Ea. vertical rebars will be adjusted as described above. Please refer to the attached documents and the original shop drawings for the "structural cage" and the "setting cage" details.

BBII proposes to accommodate this change at no additional cost to TJPA beyond the bid item quantity payment per drilled shaft lengths.

Please advise, if it is acceptable.

SUGGESTION:

ANSWER: **Accept Suggestion:** ☐

ARUP Response:

The proposal is acceptable with the following notes. Detail 12/GT-5201 requires the reinforcing steel to be placed up to 1'-0" below the top of the concrete. The top of concrete is shown on GT-5201. Longitudinal bar extensions shall be spliced as needed to achieve this (as noted on the sketch; attached). If the top of the fabricated cage is within 3'-0' of the top of the concrete, no bar extensions are required.

The 24" tie spacing shown on the shop drawings at the setting cage (Drawing SC1) is acceptable at the bar extensions.

Webcor/Obayashi Joint Venture

PROJECT MANAGEMENT - REQUEST AND ANSWERS LOG

30100 - Transbay Transit Center Project

Number	Subject	Status	Date Created	Date Required	Date Answered	Cost Impact	Proceed
T-0253	**BSE - Trestle Design Criteria Confirmation**	**Closed**	**10/19/2011**	**10/29/2011**	**11/01/2011**	**Potentially**	☐

From: Webcor Construction LP Nhi Tran **To:** Turner Construction Compan Gary Krutsch **Answered By:** Turner Construction Comp Kevin Chiu

Co-Author: Balfour Beatty Infrastructure, Inc. Ural Yal

REQUEST:

Reference Attachment 3 of Exhibit A of the TG03 Bid Package and attached memo from PB&A

Pursuant to the trestle design meeting held on October 12, 2011, Balfour Beatty Infrastructure Inc.' (BBII) requests clarification regarding their interpreted design criteria of the Temporary Access Trestle

As the only Contract document regarding the Trestle, Attachment 3 of Exhibit A of the TG030 Bid Manual has the following instructions:

In the second sentence of the second paragraph, the following statement is made, "For the design criteria for the Access Trestle, the Contract Documents and applicable standard shall be referred to." The next sentence states, "All requirements in the Temporary Bridge Specification in the Contract Documents, Section 01 53 13, shall apply to the Access Trestle."

Attachment 3 goes on further to provide very specific design load conditions and structural elements (i.e. Deck & barrier) that contradict the requirements of the Temporary bridge Spec Section 01 53 13. Based on the more "Trestle Specific" requirements of Attachment 3 and the interpreted function, being for construction use and not public use, of this type of temporary works structure, BBII and its Engineering Team arrived at the criteria /(basis of design) described in the attached memo from PB&A. This document was included with BBII's original design submittal; however for this RFI BBII has expanded some of the explanations.

Please review the provided information and confirm whether or not BBII's design criteria is appropriate for the Temporary Access Trestle.

SUGGESTION:

ANSWER: **Accept Suggestion:** ☐

PMPC repsonse per Roger Rothenburger, 11/01/11:

"1. The RFI process is not the appropriate venue to "review the provided information and confirm whether or not BBII's design criteria is appropriate." The RFI requested at the October 12, 2011 meeting was to request clarifying instructions to specific perceptions of conflict between Exhibit A - Attachment 3 and Specification Section 01-53-13 (Temporary Bridges)

2. As for the design criteria, the fourth sentence of "Exhibit A - Attachment 3" is explicit; "All requirements in the Temporary Bridges Specification in the contract Documents, SECTION 01 53 13, shall apply to the Access Trestle." This would include the requirement in Section 01-53-13 Part 1.3.A.1 (Temporary Bridges - Performance - Design Loads) stating the use of seismic design load for 475 year earthquake (earthquake with 10% probability of being exceeded in 50 years),

3. Among other criteria, wood decking material, "wheel stops, hand rails, special working access, etc listed in the balance of Attachment 3 modify the requirements in Section 01-53-13 and are not contradictory.

4. Attachment 3 does not address crash barriers or lateral bracing, among other criteria, which would defer to section 01-53-13. (Temporary Bridges)

5. PMPC recommends a small group meeting of the constructing parties to discuss the technical details to meet as many requirements as possible for BBI to get approval for Zones 1 and 2 and proceed with the Access Trestle work in a timely manner."

T-0253.1	**BSE - Trestle Design Criteria Follow-Up**	**Closed**	**11/21/2011**	**12/01/2011**	**12/02/2011**	**Potentially**	☐

From: Webcor/Obayashi Joint Venture Nhi Tran **To:** Turner Construction Compan Gary Krutsch **Answered By:** URS Corporation David Fyfe

Co-Author: Balfour Beatty Infrastructure, Inc. Ural Yal

REQUEST:

SUGGESTION:

ANSWER: **Accept Suggestion:** ☐

Number	Subject	Status	Date Created	Date Required	Date Answered	Cost Impact	Proceed
T-0254	**BSE - Modified CDSM Installation Plan for Verizon Lines at First St.**	**Closed**	**10/20/2011**	**10/30/2011**	**11/01/2011**		**Potentially** ☐

Reference RFI#T-0253, Attachment 3 of Exhibit A of the TG03 BSE Bid Package, Specification Section 01 53 13, and attached memo from PB&A

Follow up to RFI T-0253 and the meeting held 11/16/11

As noted in the 11/16/11 meeting, the cross lot bracing "struts" are supported by the Trestle substructure and analysis requires limiting trestle deformations to be compatible with the allowable strut deflections (approximately 2"). As a result the "push over" analysis as required by the AASHTO Seismic Design Criteria "SDC" (requirement of bridge spec 01 53 13) is not applicable. This was discussed in detail during the 11/16 meeting and it was concurred that due to unique structural configuration and deflection requirements, an alternate analysis method other than the SDC would be required. Discussions were had that a site specific elastic analysis using the 475 year seismic loads that is controlled by the deflection limits of the cross lot bracing would be necessary. Please confirm that a "push over" type analysis of SDC will not be required for the trestle and that the attached detailed Design Criteria (and analysis method) is acceptable.

(W/O added clarification)
BBII believes the site specific analysis would demonstrate the trestle substructure will not deform greater than 2" however the trestle superstructure will deform greater than 2".

If the Access Trestle is designed to resist the full 475 year earthquake design requirement with all response being elastic (R=1), then the Access Trestle system is not subjected to inelastic deformation for the design event. If the design is additionally shown to be capable of sustaining significant overload (no connection failures, no weld failures, no member failures, remaining stable under loading corresponding to at least two times the required design load, or corresponding to a ductility demand requiring R=2), then a pushover analysis is not necessary to verify performance. If there are questions raised regarding if this is sufficient, then the response could be demonstration that the system remains fully stable without connection or member failures at a load level corresponding to the deterministic earthquake load corresponding to the maximum event capable of being delivered by the earthquake fault system at the project location. If the design presented is in accordance with the above, then URS would be able to assist with technical engineering discussions to validate this design approach to the City of San Francisco during the building permitting process.

Further clarification: The procurement specification requires an integrated model capturing interaction between the Cross Lot Bracing and the Access Trestle, note the Cross Lot Bracing is not a component against which the trestle reacts but the Cross Slot Bracing delivers load to the Access Trestle. This behavior must be captured with sufficient accuracy and within all project criteria.

If another alternative is proposed that meets all required design criteria at all structure elements, including contractor teams identified maximum allowable deflection of 2 at the Cross Lot Bracing, URS takes no objection to the contractor pursuing this potential design alternative.

Webcor/Obayashi Joint Venture

PROJECT MANAGEMENT - REQUEST AND ANSWERS LOG

30100 - Transbay Transit Center Project

Number	Subject	Status	Date Created	Date Required	Date Answered	Cost Impact	Proceed

From: Webcor Construction LP Nhi Tran **To:** Turner Construction Compan Gary Krutsch **Answered By:** Adamson Associates, Inc George Metzger

Co-Author:

REQUEST:

Reference Specification Section 31 56 13 and attached sketches from PMPC

W/O received the modified CDSM Installation plan for Verizon lines at First St. without the relocation of the lines from PMPC as the attached.
Please confirm the plan is acceptable for CDSM Shoring Wall Designer (ARUP).

SUGGESTION:

ANSWER: **Accept Suggestion:** ☐

ARUP Response:

The minimum overlap of columns and panels defined in specification section 31 56 13 shall be satisfied full depth on each side of the obstruction.

The Contractor's means and methods, e.g., rig type, lowering the Verizon lines and protecting the Verizon lines, have not been reviewed as this is the Contractor's responsibility.

Since the RFI was submitted by the Contractor, we assume that the subcontractor doing the work, DND, has reviewed and approved the proposed methodology, including the "Plate Sealing Detail".

The efficacy the "Plate Sealing Detail" will need to be demonstrated in the field. If used, the plate should be applied to the excavation - face of the steel beam flange rather than behind the flange and removed when it is time to apply the permananent waterproofing.

Number	Subject	Status	Date Created	Date Required	Date Answered	Cost Impact	Proceed
T-0255	**BSE - Verizon Spacing Requirement on First Street (Phase 2 Utility Installation)**	**Closed**	**10/21/2011**	**10/31/2011**	**10/31/2011**	**Potentially**	☐

From: Webcor Construction LP Nhi Tran **To:** Turner Construction Compan Gary Krutsch **Answered By:** AECOM Technical Servic Eric Zagol

Co-Author: Balfour Beatty Infrastructure, Inc. Ural Yal

REQUEST:

Reference

BBII have commenced the PG&E Phase 2 installation on First Street, in order to co-ordinate the PG&E utility locations and the future Verizon phase 2 utility indicated on the attached drawing. The attached drawing was issue to BBII in the field, please confirm this drawing has been co-ordinated with the PG&E construction drawings.

BBII require the following:
- Provide a profile/section drawing indicating accurate clearances between PG&E and Verizon,
- Include (Verizon) Trench dimensions, on First Street for the phase 2 installation.

SUGGESTION:

ANSWER: **Accept Suggestion:** ☐

Verizon has prepared preliminary design drawings for their Phase II work and is in the process of coordinating with PG&E.

As indicated on RUP Sheet U-4005, the intent of the Phase II utility relocations is such that utilities of different proprietor are to be separated by 1' min.

Coordinate with TJPA's Field Representative (Turner) to arrange a site meeting with Verizon to discuss Verizon's configuration.

Number	Subject	Status	Date Created	Date Required	Date Answered	Cost Impact	Proceed

- Site meeting with Verizon representative to discuss Verizon configuration.

T-0256 **BSE - CR T-018 Design Omissions** **Closed** **10/21/2011** **10/31/2011** **11/03/2011** **Potentially** ☐

From: Webcor Construction LP Masashi Kojima **To:** Turner Construction Compan Gary Krutsch **Answered By:** Turner Construction Comp Jack Adams

Co-Author:

REQUEST:

Reference CR T-018

Neither the original albeit incomplete CR T-018 dated 9/21/11 or the flurry of subsequent email clarifications furnished the following design omissions required to complete the CR T-018:
1. Emergency egress signage requirements?
2. Lighting: Location, lumen, schedule, and if emergency lighting is required?
3. Gates & crash bar requirements?
4. Although the driveway design was not provided until 10/20/11, no dimensions were provided and there are proximity conflict(s) with the fire hydrant relative to the vent & DI.

Please provide and or remove from scope so the contractor may complete the work.

SUGGESTION:

ANSWER: **Accept Suggestion:** ☐

1. Emergency egress signage is not required by Contractor.

2. Lighting: Relocate the two portable street lights installed under EBi contract and connected overhead to the Streetlight circuit on Natoma as shown on EBi demolition drawing D-1084 (NOTE This circuiting was approved by BLHP (Robert Kawano and Roman Muros BLHP 415 - 554-1688. Light #1 install midway along the north south K Rail fence @ 540 Howard. Light #2 install midway of K Rail fence at 580 Howard. Owners of both properties have installed lighting at their exit doors.

3. Gates and Crashbars are no required at this time - install 10 foot saw horse barricade with signage Private Property - No Trespassing.

4. Driveway curb cut for 540 Howard will be 12 feet wide, with the centerline placed midpoint between the Fire Hydrant and sidewalk fresh air vent. Curb cut per DPW standard.

T-0257 **BSE - Request to Sonic Caliper 20 feet from Projected Bottom of Rock Socket** **Closed** **10/24/2011** **11/03/2011** **10/31/2011** **Potentially** ☐

From: Webcor Construction LP Nhi Tran **To:** Turner Construction Compan Gary Krutsch **Answered By:** Turner Construction Comp Kevin Chiu

Co-Author: Balfour Beatty Infrastructure, Inc. Ural Yal

REQUEST:

Please address the following information request from BBII's sub contractor Becho Inc.:

SUGGESTION:

ANSWER: **Accept Suggestion:** ☐

George Metzger's response is limited to the first sentence of this RFI which states, "... Becho would like to start performing Sonic Caliper analyses within

Number	Subject	Status	Date Created	Date Required	Date Answered	Cost Impact	Proceed

"... Becho would like to start performing Sonic Caliper analyses within 20 feet of the projected final bottom elevation of the shaft(s) to expedite the "Drill, Place, Pour" process. In order to continue the Buttress Drilling Operation without interruptions, Becho would like to utilize the hours between 1am - 6am to perform the Sonic Caliper test. For example, if Becho anticipates the completion of shaft at 10am, it would be beneficial to perform the Sonic Caliper test during the hours of 1am - 6am. This allows crews to prep, setup and perform the airlift process without having to wait for Becho engineers to test the shaft(s) during normal hours of operation, thus expediting the "Drill, Place, Pour" process.

Please advise, if it is acceptable.

20 feet of the projected final bottom elevation of the shaft(s) to expedite the "Drill, Place, Pour" process." Acceptance of permissible work activities between 1am-6am will come in the form of a TJPA Night Noise Permit. Please be sure to include the proposed work activity on the Night Noise Permit application.

10/27/2011 - George Metzger

Arup Response:

This is acceptable.

T-0258 **BSE - Demolition Status of Pile Cap at GL 33.5** **Closed** **10/27/2011** **11/06/2011** **12/09/2011** **Potentially** ☐

From: Webcor Construction LP Nhi Tran **To:** Turner Construction Compan Gary Krutsch **Answered By:** Turner Construction Comp Kevin Chiu

Co-Author: Balfour Beatty Infrastructure, Inc. Ural Yal

REQUEST:

Reference Sheet D-2213 (attached) and Specification Section 02 41 19

The underlined sections of Notes A and B state that pile caps have already been removed. This area clearly includes the pile cap at GL 33.5.
However, Note C implies that the pile cap at GL 33.5 was not removed.

Please confirm that the existing pile caps have already been removed within the "triangle" line boundary shown on drawing D-2213.

SUGGESTION:

ANSWER: **Accept Suggestion:** ☐

Existing pile caps at GL 33.5 have not been removed.
CR to follow

T-0259 **BSE - Request for approval of alternate backfill compaction inspection method** **Closed** **10/31/2011** **11/08/2011** **12/01/2011** **Potentially** ☐

From: Webcor Construction LP Masashi Kojima **To:** Turner Construction Compan Gary Krutsch **Answered By:** Turner Construction Comp Kevin Chiu

Co-Author:

Webcor/Obayashi Joint Venture

PROJECT MANAGEMENT - REQUEST AND ANSWERS LOG

30100 - Transbay Transit Center Project

Number	Subject	Status	Date Created	Date Required	Date Answered	Cost Impact	Proceed

REQUEST:

Reference Specification Section 32 12 17

With regard to the areas of non-conforming backfill compaction inspection i.e. FCR #TCB-00246: In lieu of contemporaneous compaction inspection by ISI, BBII has proposed the methodology described in attached letter #4225-000-00238. Please confirm the alternate methodology, assuming acceptable results, would suffice to meet the contract requirements.

SUGGESTION:

ANSWER: **Accept Suggestion:** ☐

The proposed methodology will be evaluated pending receipt of the test results.

Submit test results for review and evaluation.

T-0260 **BSE - D.I. Installation at Natoma Street and First Street** **Closed** **11/01/2011** **11/11/2011** **11/08/2011** **Potentially** ☐

From: Webcor Construction LP Nhi Tran **To:** Turner Construction Compan Gary Krutsch **Answered By:** AECOM Technical Servic Eric Zagol

Co-Author: Balfour Beatty Infrastructure, Inc. Ural Yal

REQUEST:

Reference Sheet U-3012 and attached sketch

BBII carried out an investigation of the active catch basin around the perimeter of the BSE project; and has a concern regarding the street elevation relative to the flow line on Natoma Street between GL 10-17.

The flow line directs surface water in a North East direction towards First Street. The only active catch basin at the intersection of Natoma and First Street is CB #305, which is approximately +8.5" higher than the currently decommissioned CB located at the intersection of Natoma St and First St (see sketch attached).

Noted during the last rain fall, surface water was directed to the decommissioned catch basin at the North East corner of Natoma Street and First Street intersection, BBII recorded approximately 6" of standing rain water accumulating at First Street and Natoma intersection. Please note that existing catch basin was decommissioned during the new sewer installation on First Street (see attached mark up drawing).

BBII recommends 2 options to control rain water from outside the BSE work area:
A) modify the flow line on Natoma Street to direct the flow toward CB # 305,

SUGGESTION:

ANSWER: **Accept Suggestion:** ☐

The referenced decommissioned CB"at the north west corner of Natoma and First streets was to be protected in place per RUP documents.

AECOM understands that the CB was decommissioned by BSE contractor in accordance with D-2230 Detail 1 and not RUP as claimed. D-2230 Detail 1 states (E) sewers, MH(s) and CB(s) are to remain active until construction of (N) CDSM perimeter shoring wall along northern end of site.

The decommissioned CB is within the excavation site. In accordance with the specifications referenced in the Recommendation section (i.e. 011560 STORMWATER POLLUTION PREVENTION, EROSION AND SEDIMENT CONTROL) submit for review storm water control plans indicating contractor's method of addressing storm water entering the site in accordance with 011560 1.4.

Number	Subject	Status	Date Created	Date Required	Date Answered	Cost Impact	Proceed

B) Install a new catch basin and connect it to the existing lateral connection CB # 305 to the combine sewer system, or connect directly to the existing MH.

Please advise on TJPA method to prevent water collecting on First Street.

T-0260.1 **BSE - D.I. Installation at Natoma Street and First Street** **Closed** **11/28/2011** **12/08/2011** **12/02/2011** **Potentially** ☐

From: Webcor Construction LP Nhi Tran **To:** Turner Construction Compan Gary Krutsch **Answered By:** Turner Construction Comp Kevin Chiu

Co-Author: Balfour Beatty Infrastructure, Inc. Ural Yal

REQUEST:

Reference RFI #T-0260 and Sheet U-3012 (attached)

RFI response T-0260 does not address the issue request information, to resolve the surface water from outside the BSE project. BBII recommend a catch basin should be installed at the corner of Natoma and First Street, as part of BBII storm water control. The catch basin will need to be installed at the low point of Natoma Street, across from CB #305.

BBII request confirmation and approval to install a catch basin at the above location. Also confirm the lateral from the new catch basin can discharge directly into SSMH#305.

SUGGESTION:

ANSWER: **Accept Suggestion:** ☐

The contractor shall control storm water in accordance with specification 01 15 61 and approved submittals.

Per field walk by Turner on 12/02/11 and prior to return of this RFI, it was observed that the contractor had installed measures that appear to have resolved this issue.

T-0261 **BSE - Natoma Street Trestle Access** **Closed** **11/01/2011** **11/11/2011** **11/02/2011** **Potentially** ☐

From: Webcor Construction LP Nhi Tran **To:** Turner Construction Compan Gary Krutsch **Answered By:** Turner Construction Comp Kevin Chiu

Co-Author: Balfour Beatty Infrastructure, Inc. Ural Yal

REQUEST:

Reference CR T-018, Specification Section 01 53 13, BBI Letter #4225-000-0145 (attached), and attached sketch

CR T-018 included drawings for access to the side and rear of 540 Howard St. BBII issued letter 4225-000-0145 in response and included a sketch highlighting a conflict between the proposed building access and the Natoma St.

SUGGESTION:

ANSWER: **Accept Suggestion:** ☐

W/O shall coordinate the location of the offshoot with its subcontractor(s) such that it does not conflict with other required elements of the project.

If the 540 Howard egress per CR T-018 is an issue, provide W/O's original egress plan (i.e. plan prior to issuance of CR T-018) that was coordinated with the

Number	Subject	Status	Date Created	Date Required	Date Answered	Cost Impact	Proceed

trestle offshoot.

The Natoma St. trestle offshoot was originally specified to span from Grid 11.5 at the center of the excavation to Grid 10 at the edge of excavation. The offshoot was moved further west per [W/O] response to the conflict with 530 Howard St.

The 540 Howard St. building access arrangement as proposed in CR T-018 does not provide sufficient access to the Natoma offshoot (see attached sketch). Please provide direction if the offshoot is to be relocated or eliminated.

Natoma St offshoot for review.

T-0262 **BSE - CAD File for trestle/pin pile exclusion zones** **Closed** **11/09/2011** **11/19/2011** **11/17/2011** **Potentially** ☐

From: Webcor Construction LP Nhi Tran **To:** Turner Construction Compan Gary Krutsch **Answered By:** Adamson Associates, Inc George Metzger

Co-Author: Balfour Beatty Infrastructure, Inc. Ural Yal

REQUEST:

Reference RFI#T-0251.1 and Specification Section 01 53 13

The response to RFI T-0251.1 included a set of sketches showing hatched "exlusion zones" where trestle/pin pile placement is not allowed.
Please provide the CAD file for these sketches for BBII use in coordinating pile locations.

SUGGESTION:

ANSWER: **Accept Suggestion:** ☐

TT Reply:

See attached for requested CAD file for RFI No. T-0262.

T-0262.1 **BSE - CAD File for Micropile Exclusion Zones** **Closed** **05/17/2012** **05/27/2012** **05/29/2012** **Potentially** ☐

From: Balfour Beatty Infrastructure, Inc. Ural Yal **To:** Turner Construction Compan Gary Krutsch **Answered By:** Adamson Associates, Inc George Metzger

Co-Author:

REQUEST:

Reference:
Specification 31 63 33
RFI T-0262

SUGGESTION:

ANSWER: **Accept Suggestion:** ☐

The exclusion zones provided in response to RFI T-262 do not apply to micropiles (detail 1/S1 - 3003). Please reference IFB - Below Grade package for coordination of micropile layout and submit micropile

Number	Subject	Status	Date Created	Date Required	Date Answered	Cost Impact	Proceed

Please provide the CAD file for Micropile "Exclusion Zones," if they differ from the exclusion zones subjected to RFI # T-262.

design and coordinated layout for review by design team via submittal process per Specifications.

T-0263 **BSE - Strut Conflicts to Thornton Tomasetti's comments on the approved Internal** **Closed** **11/09/2011** **11/19/2011** **11/17/2011** **Potentially** ☐

From: Webcor Construction LP Nhi Tran **To:** Turner Construction Compan Gary Krutsch **Answered By:** Adamson Associates, Inc George Metzger

Co-Author:

REQUEST:

Reference RFI #T-0251.1 and Transmittal No. 140-02329

Subsequent to W/O's receipt of an approved 100% internal bracing submittal and procurement, Thornton Tomasetti's comments in the plans transmitted via Transmittal #140-02329 added both columns & dimensions and revised column configurations relative to the location of the internal bracing struts not otherwise included in the base contract BSE documents. So as W/O may accurately coordinate strut locations in order to mitigate conflicts, please provide the minimum allowable dimension from column to strut.

SUGGESTION:

ANSWER: **Accept Suggestion:** ☐

TT's response to RFI No. T-0263:

This is a means and methods topic. GC to coordinate clearance requirements.

T-0264 **BSE - Bridge / Trestle Piles in Exclusion Zones** **Closed** **11/09/2011** **11/19/2011** **11/18/2011** **Potentially** ☐

From: Webcor Construction LP Nhi Tran **To:** Turner Construction Compan Gary Krutsch **Answered By:** Adamson Associates, Inc George Metzger

Co-Author: Balfour Beatty Infrastructure, Inc. Ural Yal

REQUEST:

Reference RFI#T-0251.1 and Specification Section 01 53 13

BBII is in receipt of the drawings included in RFI T-251.1 that illustrate trestle pile "exclusion zones" where piles cannot penetrate the mat slab. Of the 24 piles that are currently in conflict with the pile exclusion zones, 20 of them can be relocated with relatively minor member changes. The other 4 as indicated in the attached drawings will require significant redesign and re-procurement, especially at the bridges. Can an exception

SUGGESTION:

ANSWER: **Accept Suggestion:** ☐

See the attached TT response.

Number	Subject	Status	Date Created	Date Required	Date Answered	Cost Impact	Proceed

be made at these four locations?

T-0264.1 **BSE - Beale St Bridge Pile Conflict (Follow up to RFI T-264)** **Closed** **01/26/2012** **02/05/2012** **02/03/2012** **Potentially** ☐

From: Balfour Beatty Infrastructure, Inc. Shad Gardner **To:** Turner Construction Compan Gary Krutsch **Answered By:** Adamson Associates, Inc George Metzger

Co-Author:

REQUEST:

Reference: BBI Marked-Up SKS-0135, SH-3103

The previous response to RFI T-264 requested BBII move one of the Beale St. Bridge piles 3' west to avoid mat slab reinforcing congestion. BBII has investigated this request and found that the cap beam already has a significant cantilever on the east side of the pile in question. In order to comply with the request to move the pile, we would have to extend the cap beam and support it off the CDSM wall as shown on the attached sketch. Please advise if this is acceptable, otherwise the pile will need to remain in its current position.

SUGGESTION:

ANSWER: **Accept Suggestion:** ☐

ARUP Response:

This cannot be evaluated properly by Arup without more information regarding the loads on the shoring wall. Contractor shall submit calculations for review. Calculations shall include the load, if any, which will be imposed on the shoring wall due to settlement of the bridge supports.

Note that we have not yet seen the calculations and details for the bridge abutments at the north and south ends of the bridges.

T-0264.2 **Beale St Bridge Pile Conflict (Follow up to RFI T-264.1)** **Closed** **02/08/2012** **02/18/2012** **02/16/2012** **Potentially** ☐

From: Balfour Beatty Infrastructure, Inc. Shad Gardner **To:** Turner Construction Compan Gary Krutsch **Answered By:** Turner Construction Comp Gary Krutsch

Co-Author:

REQUEST:

The response to RFI T-264.1 requested BBII provide the loading that would placed onto the CDSM wall.
This response leads us to believe that the option to leave the pile in the current location was unacceptable.
Please confirm that the pile must be moved and provide a detailed location of where the pile placement would be accepted.
Upon receipt of this information BBII can accurately

SUGGESTION:

ANSWER: **Accept Suggestion:** ☐

The bridge pier near 35-E must be relocated. See attached SKS-0179 for acceptable range of pier shift.

Number	Subject	Status	Date Created	Date Required	Date Answered	Cost Impact	Proceed

determine the load to placed on the Wall for Arup's review.

T-0265 **BSE - TG03 BSE CDSM Cut-off Wall** **Closed** **11/09/2011** **11/19/2011** **11/17/2011** **Potentially** ☐

From: Webcor Construction LP Nhi Tran **To:** Turner Construction Compan Gary Krutsch **Answered By:** Adamson Associates, Inc George Metzger

Co-Author:

REQUEST:

Reference Drawings GT-2102, GT-2103, QBD TG0300-0098

Balfour Beatty Infrastructure, Inc. (BBII) is planning to start dewatering and excavation without installing cut-off walls and sectionalized dewatering. According to the response for QBD TG0300-0098, BBII can eliminate cut-off walls as their means and methods although contract drawings/specifications indicate cut-off walls. Please confirm.

SUGGESTION:

ANSWER: **Accept Suggestion:** ☐

ARUP Response:

These cut-off walls were shown on the drawings at the request of the Contractor during preconstruction review. The installation of these, or not, is at the discretion of the Contractor.

Arup has not yet received the dewatering submittal for the mass excavation.

T-0266 **BSE - Moratorium Conflict With Phase 2 Utilities In 1st Street** **Closed** **11/23/2011** **11/23/2011** **12/06/2011** **Potentially** ☐

From: Webcor Construction LP Manuel Saldana **To:** Turner Construction Compan Gary Krutsch **Answered By:** Turner Construction Comp Jack Adams

Co-Author: Balfour Beatty Infrastructure, Inc. Jeff Molloy

REQUEST:

BBII is in receipt of the moratorium waiver expire date of 12-09-2011. BBII/PEC will not be able to complete the Phase II utility work by 12/9/11 without accelerating the schedule. Our original request for extension was December 19, 2011. A 12/9/11 completion date may be achievable if PEC is allowed to work 10 hr shifts during the day beginning 11/28 through 12/2 as well as working on 12/3 and 12/4. In addition, we propose to have a separate night crew to work near / around the Minna Street intersection to alleviate impacts to heavy demand of day traffic. The majority, if not all, of the demolition can occur during the dday to mitigate noise at night. The night work would need to begin on 11/28 and run through 12/2. Please keep in mind that implenting an accelerated

SUGGESTION:

ANSWER: **Accept Suggestion:** ☐

Holiday Moratorium waiver is extended to 12/21/11 by SFMTA. BBII/PEC work can continue on day shift Monday-Friday in accord with SFMTA Special Traffic Permit 11-7786 issued on 12/2/11.

Number	Subject	Status	Date Created	Date Required	Date Answered	Cost Impact	Proceed

schedule may also impact PG&E. We have no control over their work and the completion of the utlity tie-ins and Mandral testing is contingent on PG&E's availability per the new adjusted completion date.

In summary we are requesting direction for the following items to meet the 12/9/11 moratorium deadline:
1) W/O to permit BBII / PEC to work the extended hours, and night shift i.e. 10 Hours Days and Night work operations,
2) Permit from MTA to extend working hours (closure times) during the day
3) Permit from MTA and DPW to work at night within lane closures
4) Permit from TJPA to work in Zones 1 & 2 at night
5) Agreement / Approval for compensation of additional cost (premium time and or shift rate) BBII will have magnitude of cost for the Monday morning discussion

We respectively request a meeting with W/O on Monday morning (11-28-2011) to discuss direction regarding the above items.

T-0269 **BSE - Mass Excavation Pile Extraction Clarification** **Closed** **12/13/2011** **12/23/2011** **12/27/2011** **Potentially** ☐

From: Webcor Construction LP David Fields **To:** Turner Construction Compan Gary Krutsch **Answered By:** Adamson Associates, Inc George Metzger

Co-Author: Balfour Beatty Infrastructure, Inc. Dean Wallahan

REQUEST:

Reference: 31 00 00 1.4 C.2 and Attached Sketch

31 00 00 1.4.C.2 Pile Extraction - To occur in two (2) stages per Zone.
Stage 1 extraction will remove the piles within the footprint of the trestle the middle 60' of the work zone, dewatering wells and piles that are in conflict with the bracing pin pile locations. Piles will be removed using a non ground deformation control method and be removed full length to be utilized for offsite LEED projects and to help achieve sustainability for this material.
Trestle piles will be installed after Stage 1 pile extraction and concurrently with Stage 2 pile

SUGGESTION:

ANSWER: **Accept Suggestion:** ☐

ARUP Response:

The method described is not in accordance with the Contract Documents which require the existing piles to be removed using Ground Deformation Control Methods (as defined in 02 41 19) except where Non-Ground Deformation Control Methods are allowed and noted as such on the drawings.

The method described is acceptable with the following notes: this is acceptable for timber piles only, and if they are longer than 30 feet, Arup may re-evaluate the

Number	Subject	Status	Date Created	Date Required	Date Answered	Cost Impact	Proceed

extraction.

Stage 2 extraction will remove the piles within the 50' +- area adjacent to the CDSM walls along A and J lines. Piles will be extracted using a ground deformation control method as per Section 02 41 19 - 3.1.B of the specifications utilizing both casing and backfilling of the void or removal by means of cutting the pile off at the grade of each level of excavation as the work proceeds.
Please reference the attached drawing for details of the above procedure.

The 80 Natoma shoring wall will be removed in stages coinciding with the stages of excavation.

Please confirm this method of pile extraction during mass excavation is acceptable.

methods used. If the density of existing piles exceeds 30 piles per 1000 square feet, Arup may re-evaluate the methods used. If excessive ground movements are observed, the Contractor shall switch to using a Ground Deformation Control Method.

T-0269.1 **BSE - Zone 2 Free Pull Pile Extraction Test Section** **Closed** **01/25/2012** **02/04/2012** **02/07/2012** **Potentially** ☐

From: Balfour Beatty Infrastructure, Inc. Shad Gardner **To:** Turner Construction Compan Gary Krutsch **Answered By:** Adamson Associates, Inc George Metzger

Co-Author:

REQUEST:

BBII are proposing to perform "free pull" pile extraction on a 'test section' in Zone 2. The proposed piles will be extracted near GL14, close to CDSM wall on the south side using a 'non ground deformation control method' by free pulling each pile without using steel casing. Any movement that may occur in the CDSM wall will be monitored by the inclinometer located close to GL 14. This test section will give us give us the information we need to determine:
1) If free pulling the piles using a non ground deformation control method affects the CDSM wall by causing movement.

Reference: DD-2211

W/O Note: W/O understands this RFI is the result of ongoing conversations between BBII, ARUP, & PMPC. W/O remains concerned that should the CDSM wall

SUGGESTION:

ANSWER: **Accept Suggestion:** ☐

ARUP Response:

Contractor to provide details of the instrumentation that will be installed by the Contractor to demonstrate compliance with Minimal Ground Loss defined in 02 41 19 3.2 G.

Arup's response to RFI 269 continues to be our position regarding pile removal during mass excavation

Number	Subject	Status	Date Created	Date Required	Date Answered	Cost Impact	Proceed

experience movement, the use of the 'Free Pull' method beneath or outside the trestle area, would significantly increase the difficulty in determining the cause of the CDSM wall movement.
2) If it is a suitable method to adopt for removing the remainder of the piles in Zone 2 located outside the trestle area.
The attached drawing (D-2211) conveys the test section in red.
Please advise on the suitability of this test to determine if free pulling can be used outside the trestle zone.

T-0269.2 **BSE - Zone 2 Free Pull Pile Extraction Test Section** **Closed** **05/01/2012** **05/11/2012** **05/04/2012** **Potentially** ☐

From: Balfour Beatty Infrastructure, Inc. Ural Yal **To:** Turner Construction Compan Gary Krutsch **Answered By:** Adamson Associates, Inc George Metzger

Co-Author:

REQUEST:

Reference: BBII 4/30/12 Ground Deformation Control Drawing

BBII are proposing to perform "free pull" pile extraction on a "test section" in Zone 2. The proposed piles will be extracted near GL14, close to CDSM wall on the north side using a "non ground deformation control method" by free pulling each pile without using steel casing. Inclinometer (I-011) located close to GL 14 will be monitored during the test. This test section will give the information needed to determine:
1) If free pulling the piles using a non ground deformation control method affects the CDSM wall by causing movement.
2) If it is a suitable method to adopt for removing the remainder of the piles in Zone 2 located outside the "trestle area".

The attached drawing conveys the test section in green.
Please advise on the suitability of this test to determine if free pulling can be used outside the trestle zone.

SUGGESTION:

ANSWER: **Accept Suggestion:** ☐

The test set-up and monitoring are acceptable. Since they differ from that used in the area of the buttress, Arup will draw conclusions on the suitability of free pulling outside the trestle zone after we evaluate the test results.

Webcor/Obayashi Joint Venture

PROJECT MANAGEMENT - REQUEST AND ANSWERS LOG

30100 - Transbay Transit Center Project

Number	Subject	Status	Date Created	Date Required	Date Answered	Cost Impact	Proceed
T-0269.3	**BSE - Zone 2 Pile Extraction Test Section**	**Closed**	**06/15/2012**	**06/25/2012**	**06/21/2012**	**Potentially**	☐

From: Balfour Beatty Infrastructure, Inc. Ural Yal **To:** Turner Construction Compan Gary Krutsch **Answered By:** Adamson Associates, Inc George Metzger

Co-Author:

REQUEST:

BBII completed the timber pile extraction test section in zone 2 on 06/12/2012. Based on the data recorded by ARUP inclinometers, please advise if BBII can continue with the timber pile extraction in Zone 2 using non ground deformation control methods ("free pull').

SUGGESTION:

ANSWER: **Accept Suggestion:** ☐

See attachmed memo for Arup's review of the Contractor's test program and proposed method of removing piles, and actions required by the Contractor going forward.

T-0270	**BSE - Clarification for Existing Ground Water Elevation**	**Closed**	**12/28/2011**	**01/07/2012**	**12/30/2011**	**Potentially**	☐

From: Webcor Construction LP David Fields **To:** Arup Kevin Clinch **Answered By:** Adamson Associates, Inc George Metzger

Co-Author: Balfour Beatty Infrastructure, Inc. Jeff Molloy

REQUEST:

Reference: 31-23-29 and Attached Document

As discussed during the meeting on 12/22/11, to help obtain an accurate dewatering model, BBII is requesting the recent piezometer data for Zones 1 and 2. In addition, BBII has reviewed the data for piezometers 1182, 1229 and 1255 located adjacent to 301 Mission St (see attachment) and would like to clarify the initial ground water level to use in the model for Zone 4. Based on our review, the existing natural groundwater condition fluctuates between 1.6 E.L and -8.1 E.L in this area. BBII would like to agree upon a starting groundwater elevation of -5.0 E.L for Zone 4.
Also, BBII would like clarification as to the base groundwater level to use for Zones 1, 2 and 3 based on the
project data.

SUGGESTION:

ANSWER: **Accept Suggestion:** ☐

ARUP Response:

Available piezometer data for zone 1 and 2 has been recently transmitted through an email to Turner dated 12/28/2011.

The baseline water level for piezo P-06F (aka 1262) is +1.6 ft NAVD88.

The baseline water level for piezo P-06MS (aka 1182) is +1.1 ft NAVD88.

The baseline water level for piezo P-07MS (aka 1229) is +1.0 ft NAVD88.

Additional baseline data will need to be collected in the piezometers in Zone 1 and 2 prior to establishing a baseline datum.

T-0271	**BSE - CRT-021 Gate Fence Clarifications**	**Closed**	**01/05/2012**	**01/05/2012**	**01/10/2012**	**Potentially**	☐

From: Webcor Construction LP David Fields **To:** Turner Construction Compan Gwynne Powell **Answered By:** Turner Construction Comp Jack Adams

Co-Author: Turner Construction Company Jack Adams

REQUEST:

SUGGESTION:

ANSWER: **Accept Suggestion:** ☐

Number	Subject	Status	Date Created	Date Required	Date Answered	Cost Impact	Proceed

In regards to the Proposed Driveway shown on the CRT#021 drawing and outlined in Bullets #1 and #2 in the Scope of Work, please clarify the following:

-Per the location of the 18ft Gate, a 10ft fence would need to be constructed to connect the existing 9ft tall fence to the Proposed Driveway gate location (see 1/4/12 Photo attached). Please confirm the 10ft fence should be included in this CRT-021.
-Should the 24'-10" section of the existing 6ft tall fence (see 1/4/12 Photo attached) be replaced?

Confirm Howard St shown on the CRT#021 attached drawing should read "Folsom St"

Confirm that Bullet #3 under the "Scope of Work" refers to Gate #1 in the CRT#021 attached drawing.

Proposed Driveway, Gate and Fence shown on the CRT#021 drawing:

-Not Confirmed. The location of new gate and curb cut is where the Contractor is currently driving trucks and equipment over city sidewalk and curb north of this light pole. Contractor has misinterpreted the locations of curb cut and gate provided by TJPA. The location of proposed driveway curb cut and new gate is to be north of existing light pole as shown - dimensions were provided only as guidance.

- Confirmed the added fence cost should be included in this CR T-021. Contractor to add small section of fence as required to install new gate (fence added both north and south side of gate). Fence can be nine foot and align with top of existing Parcel P'-P" fence and/or step down to align with existing 6 foot fence. Note: green slats are to be eliminated at both gate and fence in this area to assist Truck Drivers and pedestrian vision.

-Not Confirmed. Section of the existing 6ft tall fence up to AC Transit Fence corner is acceptable as is.

- Confirmed. "Howard St" shown on the CRT#021 attached drawing should read "Folsom St" .

- Confirmed. Bullet #3 under the "Scope of Work" refers to "Current Driveway" Gate #1 in the CRT#021 attached drawing

---

T-0272 **BSE - D1 Casing Recovery Inquiries** **Closed** **01/27/2012** **02/02/2012** **01/27/2012** **Potentially** ☐

From: Webcor Construction LP Joanne Filipas **To:** Turner Construction Compan Gary Krutsch **Answered By:** Arup Kevin Clinch

Co-Author:

REQUEST:

BBII is requesting the following to complete its D1 casing retrieval plan:
1. Condition specific engineering calculations to mitigate earth and water heave from the bottom of the casing.

SUGGESTION:

ANSWER: **Accept Suggestion:** ☐

NOTE: Void. Answered in RFI T-0272.1

ARUP Response:

Number	Subject	Status	Date Created	Date Required	Date Answered	Cost Impact	Proceed

2. Condition specific engineering calculations to substantiate no casing buckling.
3. Condition specific plan engineering calculations for dewatering, specifically expected water quantity.

Note - This RFI is high priority and an expedited review/response is necessary.

Arup is in receipt of the Contractor's Buttress Shaft D1 Casing Retrieval Plan (Constructware Transmittal item 140-03134). Designing and executing the plan to retrieve the casing is the Contractor's responsibility. The Contractor shall provide calculations for Arup to review which demonstrate that the method does not lead to ground loss beneath and around the casing. Arup will not provide calculations in support of the Contractor's plan.

1. Arup cannot comment without a more complete plan that includes the methodology by which they intend to retrieve the casing. The plan should include, but not be limited to, the current height and composition of the soil plug in the shaft, the planned height and composition of the soil plug during the retrieval process, the depth of maximum dewatering, the method by which the shaft will be backfilled upon retrieval of the casing, and the measures they will take to monitor heave at the plug.

2. Arup will not perform these calculations. The Plan (Constructware Transmittal item 140-03134) states that calculations are being prepared.

3. Refer to response to question 1.

Answered by Kevin Clinch (ARUP)
01/27/2012

T-0272.1 **BSE - D1 Casing Recovery Inquiries** **Closed** **01/27/2012** **02/06/2012** **01/27/2012** **Potentially** ☐

From: Webcor Construction LP Kirk Nielsen **To:** Arup Kevin Clinch **Answered By:** Arup Kevin Clinch

Co-Author:

REQUEST:

BBII is requesting the following to complete its D1 casing retrieval plan:
1. Condition specific engineering calculations to mitigate earth and water heave from the bottom of the casing.
2. Condition specific engineering calculations to substantiate no casing buckling.
3. Condition specific plan engineering calculations for

SUGGESTION:

ANSWER: **Accept Suggestion:** ☐

ARUP Response:

Arup is in receipt of the Contractor's Buttress Shaft D1 Casing Retrieval Plan (Constructware Transmittal item 140-03134). Designing and executing the plan to retrieve the casing is the Contractor's responsibility. The Contractor shall provide calculations for Arup to

Number	Subject	Status	Date Created	Date Required	Date Answered	Cost Impact	Proceed

dewatering, specifically expected water quantity.

Note - This RFI is high priority and an expedited review/response is necessary.

review which demonstrate that the method does not lead to ground loss beneath and around the casing. Arup will not provide calculations in support of the Contractor's plan.

1. Arup cannot comment without a more complete plan that includes the methodology by which they intend to retrieve the casing. The plan should include, but not be limited to, the current height and composition of the soil plug in the shaft, the planned height and composition of the soil plug during the retrieval process, the depth of maximum dewatering, the method by which the shaft will be backfilled upon retrieval of the casing, and the measures they will take to monitor heave at the plug.

2. Arup will not perform these calculations. The Plan (Constructware Transmittal item 140-03134) states that calculations are being prepared.

3. Refer to response to question 1.

Answered by Kevin Clinch (ARUP)
01/27/2012

T-0273 **BSE - Clarification for Driveway Desgin at 540 Howard CR -018R2** **Closed** **01/30/2012** **02/09/2012** **02/06/2012** **Potentially** ☐

From: Webcor Construction LP David Fields **To:** Turner Construction Compan Gary Krutsch **Answered By:** Turner Construction Comp Gary Krutsch

Co-Author:

REQUEST:

Reference: Attached BBI Sketch
CRT-018Rl directs BBII to complete a 12ft driveway at the 540 Howard Street. The existing conditions/location of the curb, USPS facilities and water fire hydrant prevents the driveway from being installed within compliance with the DPW and ADA standards.
DPW/Tumer/W/0 and BBII discussed various solutions to bring the driveway into confmmance with ADA and DPW standards at the field meeting held on January 17th 2012 and again 01/24//2012.
Pursuant to the field meeting and direction of CRT-018R2,

SUGGESTION:

ANSWER: **Accept Suggestion:** ☐

Per Alberto Herrera of DPW, Mike Pavich of BSM, and Pete Arnautoff of BFP, the proposed modification is acceptable. See (2) linked documents for the full breadth of their responses.

Number	Subject	Status	Date Created	Date Required	Date Answered	Cost Impact	Proceed

BBII is requesting detailed plans to allow for construction of a compliant driveway at 540 Howard Street. BBII has been directed in the field by W /0/Tumer, to complete modification to the driveway at 540 Howard Street. Per our field meeting please refer to the attached drawing, indicating BBII understanding on the modifications required. Please confirm the modification per the attached drawing is compliant with City and ADA driveway standards.

T-0274 **BSE - Conflict between CDSM & Dewatering specification** **Closed** **02/10/2012** **02/20/2012** **02/16/2012** **Potentially** ☐

From: Webcor Construction LP Kirk Nielsen **To:** Turner Construction Compan Gary Krutsch **Answered By:** Arup Kevin Clinch

Co-Author:

REQUEST:

Section 31 56 13.3.12.F.1 states "The performance of the shoring wall shall be such that the groundwater levels around the excavation are maintained within (3.0) feet from the pre-excavation levels." The section further states "In the event the water levels begin to drop below the specified limit, the Contractor shall be responsible to implement appropriate measures to control groundwater levels within the specified limits."

Section 31 23 19.1.5.B.10 states "Include description of emergency procedures to follow when system failure or other problems arise."

In the event the CDSM wall fails to mitigate the effects of the dewatering within the excavation should not previously drilled recharge wells be ready to recharge the affected area outside the excavation?

SUGGESTION:

ANSWER: **Accept Suggestion:** ☐

ARUP Response:

Recharing wells may be used at the Contractor's discretion pending Arup's review of the well details.

These wells shall be at no additional cost to the TJPA

T-0275 **BSE - Request for relief from 1" deep dimension of CDSM cavities** **Closed** **02/15/2012** **02/25/2012** **02/16/2012** **Potentially** ☐

From: Webcor Construction LP Kirk Nielsen **To:** Turner Construction Compan Gary Krutsch **Answered By:** Webcor Construction LP David Fields

Co-Author:

Number	Subject	Status	Date Created	Date Required	Date Answered	Cost Impact	Proceed

REQUEST:

Section 31 00 00.3.8.L states
"On vertical surfaces of CDSM shoring walls, scarify high areas and fill in cavities exceeding 1" deep with patching cement to provide a reasonably uniform surface over which protection board, installed in a later contract, will span without buckling."
The trade subcontractor is seeking relief from the 1" deep requirement. Please advise as to:
1. Acceptance.
2. Revised dimension.

SUGGESTION:

ANSWER: **Accept Suggestion:** ☐

This RFI does not comply with the RFI definition in Spec 00 07 00 Section 6.02. WOJV must comply with Spec 31 00 00 Section 3.8.L.

T-0275.1 **BSE - Request for relief from 1" deep dimension of CDSM** **Closed** **02/16/2012** **02/26/2012** **02/17/2012** **Potentially** ☐

From: Webcor Construction LP Kirk Nielsen **To:** Turner Construction Compan Gary Krutsch **Answered By:** Turner Construction Comp Gary Krutsch

Co-Author:

REQUEST:

Section 31 00 00.3.8.L states
"On vertical surfaces of CDSM shoring walls, scarify high areas and fill in cavities exceeding 1" deep with patching cement to provide a reasonably uniform surface over which protection board, installed in a later contract, will span without buckling."
The trade subcontractor is seeking relief from the 1" deep requirement. Please advise as to:
1. Acceptance.
2. Revised dimension.

SUGGESTION:

ANSWER: **Accept Suggestion:** ☐

WOJV must comply with Spec 31 00 00 Section 3.8.L.

T-0276 **BSE - Request to Change Buttress Concrete Slump Requirements** **Closed** **02/16/2012** **02/26/2012** **02/17/2012** **Potentially** ☐

From: Balfour Beatty Infrastructure, Inc. Emre Erzen **To:** Turner Construction Compan Gary Krutsch **Answered By:** Arup Kevin Clinch

Co-Author:

REQUEST:

Reference: 31 63 29

Currently, the primary and the secondary shafts utilize a superplasticizer to achieve slump as the water content of the mixes is low. Typically, mixes that utilize a

SUGGESTION:

ANSWER: **Accept Suggestion:** ☐

This is acceptable.

Number	Subject	Status	Date Created	Date Required	Date Answered	Cost Impact	Proceed

superplasticizer are intended for slump ranges between 9" and 12," however, project specifications require an 8" +/- 1" slump. Unfortunately, the addition of the superplasticizer has made it difficult to achieve slump as specified. BBII and Central Concrete are requesting an 8" + 1" - 2" slump (giving a range of 6" to 9") in lieu of the specified 8" +/- 1". There will be no adverse effect to the strength as slump is achieved through chemical admixtures and not by adding water. Please advise.

T-0277 **BSE - Request for Buttress Shaft Design Documentation** **Closed** **02/16/2012** **02/26/2012** **02/23/2012** **Potentially** ☐

From: Balfour Beatty Infrastructure, Inc. Emre Erzen **To:** Turner Construction Compan Gary Krutsch **Answered By:** Turner Construction Comp Gary Krutsch

Co-Author:

REQUEST:

Please address the following information request from BBII's sub contractor Becho Inc.:
" ... Becho requests to obtain all and any documentation used in the design ofthe Buttress Shafts. Documentation should include, but is not limited to, submitted and approved calculations, sketches, preliminary designs and calculations, conceptual drawings, all site investigation, and all other work documents and ·work papers that were utilized to develop the buttress shaft design in addition to ·what's provided in the contract documents and specifications. "

Please advise, if it is acceptable.

SUGGESTION:

ANSWER: **Accept Suggestion:** ☐

The request for documents contained in this RFI is rejected as overly broad, burdensome and seemingly unrelated to any legitimate enquiry relating to the contract or the required work. This is not the proper use of an RFI.

T-0277.1 **BSE - Becho's 2nd Request for Buttress Design Doc** **Closed** **03/23/2012** **04/02/2012** **03/28/2012** **Potentially** ☐

From: Balfour Beatty Infrastructure, Inc. Ural Yal **To:** Turner Construction Compan Gary Krutsch **Answered By:** Turner Construction Comp Gary Krutsch

Co-Author:

REQUEST:

Becho requests to obtain all work documents, sketches, preliminary calculations and approved calculations which show how the designer arrived the final skin friction values used in the design of the buttress shafts as well as the buttress shafts minimum 10 feet embedment into bedrock.

SUGGESTION:

ANSWER: **Accept Suggestion:** ☐

Per the TJPA, refer to response given in RFI T-0277.

Webcor/Obayashi Joint Venture

PROJECT MANAGEMENT - REQUEST AND ANSWERS LOG

30100 - Transbay Transit Center Project

Number	Subject	Status	Date Created	Date Required	Date Answered	Cost Impact	Proceed
T-0277.2	**BSE - Request for Buttress Shaft Design Documentation**	**Closed**	**04/04/2012**	**04/14/2012**	**04/11/2012**	**Potentially**	☐

From: Balfour Beatty Infrastructure, Inc. Ural Yal **To:** Turner Construction Compan Gary Krutsch **Answered By:** Transbay PMPC Douglas Jacobson

Co-Author:

REQUEST:

Per the agreement at the 4/4/12 TCCO Progress Meeting BSE Buttress Shoring and Excavation please find Becho's Request for additional design documentation below:

Becho is in receipt of RFI # T-0277.1 regarding the Buttress Shaft Design Documentation. As per the TJPA response, Becho more specifically requests the Reference Shoring Design work documents pertinent to zone 4.

SUGGESTION:

ANSWER: **Accept Suggestion:** ☐

We are able to reply to a more specific information request. Per Contract Spec 00 03 20 - GEOTECHNICAL DATA, sections 1.2 A.1 and 1.3 A.1 and A.2, three documents (listed below) are available for the Contractor to review. Please specify which report is requested.

00 03 20 1.2 A.1 Transbay Transit Center, Final Geotechnical Data Report, Volumes 1, 2, and 3. Transbay Joint Powers Authority. Prepared by Arup North America Limited, February 2010.

00 03 20 1.3 A.1 Final Report, Results of Prototype Test Program, Installation of Shoring Walls Using the Cement Deep Soil Mixing Method. Transbay Transit Center, Prepared by Arup North America Limited, May 2010.

00 03 20 1.3 A.2 Final Report, Results of Prototype Test Program and Monitoring during Construction of Drilled Shafts. Transbay Transit Center, Prepared by Arup North America Limited, May 2010.

T-0278	**BSE - Access Trestle Bump Out Coordination**	**Closed**	**02/16/2012**	**02/26/2012**	**02/24/2012**	**Potentially**	☐

From: Webcor Construction LP David Fields **To:** Turner Construction Compan Gary Krutsch **Answered By:** Arup Kevin Clinch

Co-Author:

REQUEST:

Reference: Attached BII Sketch
Due to the deletion of the "Natoma Finger" portion of the access trustle BBII is proposing to install additional "bump outs" (per the attached sketch). For coordination purposes, please provide "no fly" zone information for these locations.

SUGGESTION:

ANSWER: **Accept Suggestion:** ☐

Arup understands that the design team's response to RFI-251.1 shows the "no-fly-zones". Contractor shall refer to the RFI-251.1 response for this information. Regarding the addition of the "bumpouts", Arup will review the geotechnical aspects of the revised design when they are submitted.

T-0279	**BSE - Trestle Welding Code Compatibility**	**Closed**	**02/27/2012**	**03/08/2012**	**03/20/2012**	**Potentially**	☐

From: Balfour Beatty Infrastructure, Inc. Shad Gardner **To:** Turner Construction Compan Gary Krutsch **Answered By:** URS Corporation David Fyfe

Number	Subject	Status	Date Created	Date Required	Date Answered	Cost Impact	Proceed

Co-Author:

REQUEST:

Reference:
ASHTO/AWSS D1.5M/D1.5:2008
SH-0200

The Temporary Access Trestle Design submitted in December specified AWS 01.1 as the required welding code. During the review process the reviewers requested that the welding code be changed to AWS 01.5- Bridge Welding Code. This request was complied with by revising general note A5.2 on the conformed trestle drawings.

Since issuing these documents, BBII has been informed by both our shop and field welding inspectors that a compatibility discrepancy exists between the 01.5 welding code and base metals/ member shapes originally specified in the trestle design.

D1.5 is specifically intended for use on bridges and it is not intended for use on "structures composed of structural tubing" as noted in section 1.1.1 attached. This causes a discrepancy because unlike most bridges, our trestle contains a substructure completely comprised of structural steel tubing. (ie Pipe pile, lateral and longitudinal X-bracing).

In addition to the pipe incompatibility, there is also an incompatibility between the specified base metals. 01.5 requires base metals to be ASTM A709 and the trestle design specified a variety of different base metals depending on their structural shape as shown in general note 2.28 also attached
Since Article 1.1.1 of 01.5 permits the Engineer to choose to reference an alternate applicable welding standard when fabrication or structure components are not specifically addressed within its sections, BBII proposes keeping AWS 01.1 as the specified welding code because of its base metal compatibility, but adding a supplemental trestle specific welding specification written by the EOR that increases the quality control to a level equal to that of 01.5. This supplemental specification will include applicable portions of 01.5 section 3 "Workmanship" and section 3 "Inspection" when the requirements are greater than that of 01.1. (ie: fit-up tolerances, NOT frequency, etc).

SUGGESTION:

ANSWER: **Accept Suggestion:** ☐

URS Response to RFI No. T-0279 Trestle Welding Code Compatibility:

A series of typographic errors occur within the RFI, referencing the AWS documents D1.1 and D1.5 as 01.1 or 01.5. References to AWS documents should be correctly identified by the correct AWS document numbers to avoid any future confusion within the project documentation. This RFI should be corrected or annotated to reflect these typographic errors.

No exception has been taken to use tubular steel elements as components within the trestle structures.

Note AWS D1.5 section 1.2.2 Approved Base Metals: This AWS section provides a list of approved base metals, and prefaces this with Unless otherwise specified, and furthermore specifically states Other steels may be approved by the Engineer. We understand other steels have been recommended for approval by the Engineer (EOR = Pirooz Barar of PB&A) as they are included for use in the set of contract drawings for the Access Trestle. With the recommendation by the EOR and concurrence by the Peer Reviewer that the base metals proposed for use are suitable for the intended usage including an assessment of fatigue and potential for cracking of welding for the required service loading an service life, URS takes no exception to the use of the alternate base metals.

Use of AWS D1.5 is a requirement of the procurement specification, not simply a request made by technical reviewers. Reference 01 53 13 Rev 1.

Where materials within the trestle structure are not addressed by AWS D1.5, then use of AWS D1.1 is approved for connection of these elements where D1.5 is not applicable as follows:

Where preapproved joint geometry for welding is required, geometry in accordance with preapproved welding procedures per AWS D1.1 are approved for use;

Number	Subject	Status	Date Created	Date Required	Date Answered	Cost Impact	Proceed

Please advise if the proposed resolution is acceptable.
Upon concurrence, BBII will submit the EOR's
Trestle Welding specification for review.

Provide all inspections for AWS D1.1 elements in accordance with all requirements of AWS D1.1;

Where an element that is addressed by AWS D1.5 is connected to an element governed by AWS D1.1 (for example, plate to structural tube), the most stringent inspection requirements of AWS D1.1 vs. AWS D1.5 shall be provided; and,

Minimum and maximum fillet weld sizes and other requirements applicable to fillet welding per AWS D1.5 shall apply to all fillet welding irrespective of the base metal to which welding is applied.

Use of a supplemental welding specification in place of use of AWS D1.5 is not acceptable. Provide full compliance with AWS D1.5 for all procedures and inspections except where AWS D1.1 has been approved for use per the notes above.

T-0279.1 **BSE - Trestle Welding Code Compatibility** **Closed** **03/28/2012** **04/07/2012** **04/09/2012** **Potentially** ☐

From: Balfour Beatty Infrastructure, Inc. Shad Gardner **To:** Turner Construction Compan Gary Krutsch **Answered By:** URS Corporation David Fyfe

Co-Author:

REQUEST:

Reference:
BBII Demarcation Sketch
PB&A Trestle Welding Inspection Plan

The response to RFI T-279 provided a method of dealing with the trestle welding code compatibility issues that would be difficult to enforce, track and document. BBII proposes making a clear demarcation line at the bottom the cap beam that will clearly differentiate the two welding codes.

Additionally the RFI response appears to infer that the Temporary Bridge Specification 01-53-13 requires full compliance with AWS D1.5 as described in the third and last paragraph. 01-53-13 Paragraph 1.6.H (revB) only requires Welding Qualifications (procedures and

SUGGESTION:

ANSWER: **Accept Suggestion:** ☐

Use of AWS D1.1 and AWS D1.5 for superstructure and substructure as indicated on bridge cross section figure prepared by BBII and attached to this RFI No. T-0279.1 is acceptable.

Submission of the Trestle Welding Inspection Plan (by PB&A and attached to this RFI No. T-0279.1) for review and acceptance via the RFI process is not an acceptable method, therefore we have no comment on it.

For clarity we respond to the welding inspection plan with the following: All requirements, including inspection, of AWS D1.1 apply to AWS D1.1 areas. All requirements, including inspection, of AWS D1.5 apply to AWS D1.5 areas.

Number	Subject	Status	Date Created	Date Required	Date Answered	Cost Impact	Proceed

personnel) to be performed in accordance with AWS D1.5.

Therefore in order to comply with the project specifications and the appropriate welding codes, BBII will Perform all welding below the demarcation line (substructure) with weld procedures and welder qualifications in conformance with AWS D1.1 since the members are predominately comprised of tubular material.

Perform all welding above the demarcation line (superstructure) with weld procedures and welder qualifications conformance with AWS D1.5 since the main members are Wide flange beam.

Inspection will be performed by the project special inspector in accordance with recommendations of the EOR attached.

Please confirm this is acceptable.

T-0280 **BSE - Request to shorten depth on shaft D/1** **Closed** **02/29/2012** **03/10/2012** **03/02/2012** **Potentially** ☐

From: Webcor Construction LP Joanne Filipas **To:** Turner Construction Compan Gary Krutsch **Answered By:** Adamson Associates, Inc George Metzger

Co-Author:

REQUEST:

Ref - Attached RFI from BBI/Becho

Due to the blowout conditions previously encountered on Buttress Shaft D1, BECHO requests to install Shaft D1 to a depth of 180 feet as previously proposed by ARUP. BECHO believes the blowout condition still exists and thus would like to proceed with caution to prevent another occurrence. Alternatively, if ARUP feels this is no longer an option, BECHO requests that ARUP increase the maximum spacing allowed between the tangent shafts, in event to mitigate possible schedule delay, and/or re-break of casing while advancing D1. By allowing such changes will help mitigate Buttress shaft schedule.

W/O acknowledges that BBII has yet to demonstrate that a "blowout" condition has in fact occurred. W/O would

SUGGESTION:

ANSWER: **Accept Suggestion:** ☐

ARUP Response:
Earlier discussions regarding the consideration of shortening shaft D-1 was based on having E-1 and E-2 in place to depth and abandoning the casing at D-1 beneath the sheared break. Shafts E-1 and E-2 are not complete and the casing has been painstakingly removed, therefore shaft D-1 shall be installed in accordance with the Contract Documents.

The Contractor shall submit a proposal for achieving the increased spacing that acknowledges the fixed distance between shaft rows C and M which were established based on RFI 151.

Number	Subject	Status	Date Created	Date Required	Date Answered	Cost Impact	Proceed

request the design team consider short pouring D-1 due to drilling difficulties encountered. Alternatively, W/O would request the spacing revision described above.

T-0281 **BSE - Survey Site Drawing and Certificate Submittal** **Closed** **03/06/2012** **03/16/2012** **03/09/2012** **Potentially** ☐

From: Balfour Beatty Infrastructure, Inc. Danny Walsh **To:** Turner Construction Compan Gary Krutsch **Answered By:** Adamson Associates, Inc George Metzger

Co-Author:

REQUEST:

BBIII is unclear on what is required for the "site drawing and certificate" submittal listed in section 01 10 50 1.3B. As the first contractor working on the construction of the terminal, no previous work is in place. Please confirm that the requirement is intended for future trade packages (to verify the work already completed by previous trade subcontractors), or provide additional clarification on what is required of BBII to complete this submittal requirement.

SUGGESTION:

ANSWER: **Accept Suggestion:** ☐

The Contractor with certification of the GC's surveyor is to provide items specified in Division 01 10 50 1.3B for the purpose noted in the specification: to certify "the elevations and locations of the Work are in conformance with Contract Documents".

T-0282 **BSE - News/Advertisement Stand Removal** **Closed** **03/16/2012** **03/26/2012** **03/19/2012** **Potentially** ☐

From: Balfour Beatty Infrastructure, Inc. Ural Yal **To:** Turner Construction Compan Gary Krutsch **Answered By:** Turner Construction Comp Jack Adams

Co-Author:

REQUEST:

The unused news/advertisement stand on the Westside of Fremont Street needs to be removed to accommodate the Buttress drilling on shafts A & B. BBII intends to modify the sidewalk at this current location to provide 3 - 11ft lanes on Fremont Street per specification section 01-15-70. (see attached sketch)

Please provide direction to relocate or remove these stands.

SUGGESTION:

ANSWER: **Accept Suggestion:** ☐

Per Jack Adams of Turner, at no cost to the owner the Contractor may remove the news/advertisement stand and store in Parcel M

T-0283 **BSE - Backfill Material For Pre-Trench** **Closed** **03/15/2012** **03/25/2012** **03/20/2012** **Potentially** ☐

From: Balfour Beatty Infrastructure, Inc. Jeff Molloy **To:** Turner Construction Compan Gary Krutsch **Answered By:** Turner Construction Comp Jack Adams

Co-Author:

Webcor/Obayashi Joint Venture

PROJECT MANAGEMENT - REQUEST AND ANSWERS LOG

30100 - Transbay Transit Center Project

Number	Subject	Status	Date Created	Date Required	Date Answered	Cost Impact	Proceed

REQUEST:

Reference:
Proposed 1 sack sand mix design

BBII is not able to achieve the required compaction per SFDPW requirements due to inclement weather conditions. We have been advised from suppliers that the sand backfill material is saturated, and from past experience will not achieve the required compaction.

If the weather persists as forcasted BBII is proposing to backfill with 1 sack sand as a substitute to dry material. This will allow us to maintain the scheduled CDSM wall installation on 3/23/2012, and maintain the DPW compaction standards. Note sand slurry is only required in the street or public right of way.

Note: According to BBII this will not impact DND/Malcolm in the installation of the CDSM wall.

SUGGESTION:

ANSWER: **Accept Suggestion:** ☐

BBII has requested use of sack sand slurry mix design FOA100CX. This use of sand/slurry is specified in Section 31 23 10, 2.2, H of the utility relocation spec. See also RFI U-0156.

This use is acceptable per SFDPW requirements due to inclement weather conditions. Also, this use of slurry is important for the upcoming CDSM wall at the pretrench locations. Per correspondence attached from Webcor-Obayashi the CM/GC, they state that their Trade Subcontractor "BBII has considered and coordinated with DND/Malcolm in this regard." (see uploaded document under 'Supporting Documents')

Substituting this slurry versus soils compaction and testing is acceptable. However this sand slurry use is a Contractor scheduling decision and will be at no additional cost to the TJPA from WOJV, BBII, and/or Malcolm-DND.

T-0283.1 **BSE - Backfill for Pretrenching** **Closed** **03/29/2012** **04/08/2012** **03/30/2012** **Potentially** ☐

From: Balfour Beatty Infrastructure, Inc. Ural Yal **To:** Turner Construction Compan Gary Krutsch **Answered By:** Turner Construction Comp Jack Adams

Co-Author:

REQUEST:

As a supplement to RFI 283 regarding the use of a CDF mix for backfill of the pre-trench at A-line across First Street, BBII is submitting the attached mix design for review and acceptance. The previously submitted mix design was not pumpable and due to the nature of the pile extraction and backfill operation a pumpable mix is required so backfill compaction can be achieved. The attached mix will allow us to achieve the DPW compaction requirements and also allow for the installation of the CDSM wall.

The use of this mix design is scheduled for this afternoon in order to maintain the CDSM installation schedule for this weekend. BBII would much appreciate an expedited review and acceptance of this mix design.

SUGGESTION:

ANSWER: **Accept Suggestion:** ☐

CDF mix for backfill of the CDSM pre-trench locations is acceptable. CM/GC Webcor-Obayashi to confirm with their Trade Subcontractor such that "BBII has considered and coordinated with DND/Malcolm in this regard.

Substituting this mix versus soils compaction and testing is acceptable for the upcoming CDSM walls at the pretrench locations First and Fremont Streets.

However, again this use is a Contractor scheduling decision and will be at no additional cost to the TJPA from WOJV, BBII, and/or Malcolm-DND

Webcor/Obayashi Joint Venture

PROJECT MANAGEMENT - REQUEST AND ANSWERS LOG

30100 - Transbay Transit Center Project

Number	Subject	Status	Date Created	Date Required	Date Answered	Cost Impact	Proceed
T-0284	**BSE - Request to Borehole Coordinates TTB-07 TTB-09**	**Closed**	**03/21/2012**	**03/31/2012**	**03/23/2012**	**Potentially**	☐

From: Balfour Beatty Infrastructure, Inc. Ural Yal **To:** Turner Construction Compan Gary Krutsch **Answered By:** Webcor Construction LP David Fields

Co-Author:

REQUEST:

After further review of the Geotechnical Report produced by ARUP it has come to BECHO's attention that Boreholes TTB-07 and TTB-09 were not surveyed. BECHO respectfully requests to obtain Northing and Easting coordinates for TTB-07 and TTB-09.

SUGGESTION:

ANSWER: **Accept Suggestion:** ☐

These boreholes were not surveyed. The approximate coordinates are listed in Table 3 in the Geotechnical Data Report.

T-0285	**BSE - Buttress Rebar Cage Length Adjustment**	**Closed**	**03/21/2012**	**03/31/2012**	**03/26/2012**	**Potentially**	☐

From: Balfour Beatty Infrastructure, Inc. Ural Yal **To:** Turner Construction Compan Gary Krutsch **Answered By:** Adamson Associates, Inc George Metzger

Co-Author:

REQUEST:

Please refer to RFI T-0252, where the Engineer accepted BBII's proposal of fabricating the buttress rebar cages to a pre-extended length of 260' in order to accommodate the buttress shafts that are deeper than 241'. In RFI T-0252, BBII had suggested to extend the overall length of all rebar cage assemblies to 260' by increasing the length of the top "setting cage" 19 feet more. In this proposal, the lengths of structural cage segments were to remain unchanged.

BBII's proposal of extending the length of the setting cage by 19' got accepted with the added requirement of splicing vertical rebar extensions on the job site. BBII takes exception to the added requirement of splicihg vertical rebar extensions on the job site, which would lead to an increase in durations of the rebar cage installations.

In order to eliminate splicing, BBII now proposes to fabricate the setting cage segments up to 9 feet longer than shown on the plans. The structural rebar cage segment lengths will remain unchanged. The top of the structural cage sections will be within up to 9 feet proximity from the top of concrete. This proposal will accommodate the rebar cages with a maximum total length of 250' (241 '+9'=250').

If the rebar cage assembly needs to be longer than 250 feet, BBII will direct the rebar cage manufacturer to also extend the bottom structural cage segment by an added distance equal to the required total length of the rebar cage assembly less 250 feet.

SUGGESTION:

ANSWER: **Accept Suggestion:** ☐

Detail 12/GT-5201 requires the reinforcing steel to be placed up to 1'-0" below the top of the concrete. The top of concrete is shown on GT-5201. Longitudinal bar extensions shall be spliced as needed to achieve this, or the cage shall be fabricated long to achieve this. However, if the top of the fabricated cage is within 9'-0" of the top of the concrete, no bar extensions nor extended cages are required.

Webcor/Obayashi Joint Venture

PROJECT MANAGEMENT - REQUEST AND ANSWERS LOG

30100 - Transbay Transit Center Project

Number	Subject	Status	Date Created	Date Required	Date Answered	Cost Impact	Proceed
T-0286	**BSE - Use of Actual Utility Weights**	**Closed**	**03/26/2012**	**04/05/2012**	**03/29/2012**	**Potentially**	☐

From: Balfour Beatty Infrastructure, Inc. Shad Gardner **To:** Turner Construction Compan Gary Krutsch **Answered By:** Transbay PMPC Douglas Jacobson

Co-Author:

REQUEST:

Reference:
Marked-Up SH-3101
Marked-Up SH-3102
Utility Weight Calculations
PG&E Weights Email
Verizon Weights Email

Temporary Bridge specification 01-53-13 (1.3B) requires the bridge design to include a 3000 lb/lf allowance for hanging utilities below the bridge. Extensive coordination between the RUP designers and the utility owners, BBII has attained the exact location and actual weight of the utilities to be supported by the bridge structures. These weights are shown in the attached document and have been used in the design of the bridge structure as well as the utility hangers. Through our coordination efforts we also know that future utilities will not be added until the temporary bridges are removed. Please confirm that use of the actual utility weights in our design is acceptable.

SUGGESTION:

ANSWER: **Accept Suggestion:** ☐

Reply to RFI 286.0 Use of actual utility loads versus 3000lb per lf in Specifications

RFI T-0286.0 regarding the use of actual weight of utilities versus the nominal 3000 lb/lf required in Specification Section 01-53-13 Part 1.3.B (Temporary Bridges - Performance Requirements) first requires the correct actual weight of the utilities and the application to each of the streets, First, Fremont, and Beale respectively..

First Street Utility Unit Weights

The BBI/PBA temporary bridge design for First Street shows the following utilities suspended from the bridge:

Girder #3 & Girder #4 (Counting from left to right facing north)

PG&E (6) each 6" diameter steel ducts (17.7 lb/lf) + cable (8.2 lb/lf) @ 25.9lb/lf = 155.4 lb/lf under 2 girders #3 & #4 (counting left to right)
Girder #5 & Girder #6 (Counting from left to right facing north)

PG&E (9) each 6" diameter steel ducts @ 25.9lb/lf = 233.1 lb/lf under 2 girders #5 & #6)
PG&E (1) each 4" diameter steel duct @ 25.9lb/lf = 25.9 lb/lf under 2 girders #5 & #6)
Verizon (6) each 4" diameter steel duct @ 11.59lb/lf = 69.54 lb/lf under 2 girders #5 & #6
Subtotal utility load used by BBI/PBA for girders #3 & #4 = 155.4 lb/lf

Subtotal utility load used by BBI/PBA for girders #5 &#6 = 328.54 lb/lf

Total utility load used by BBI/PBA for all girders #3~#6 = 483.94 lb/lf

There are several slight errors in this BBI/PBA calculation:

Number	Subject	Status	Date Created	Date Required	Date Answered	Cost Impact	Proceed

Verizon has incorrectly used the weight of 4" diameter PVC duct rather than steel duct used in the temporary bridge crossing (4" diameter steel @ 10.3lb/lf duct + 3lb/lf fiber cable x 6 each lines = 6ea x 13.3 lb/lf = 79.8 lb/lf versus 69.54 lb/lf)

PG & E weight for 6" diameter steel duct is slightly less than the weight for 6" diameter pile Schedule 40 (17.7lb/lf versus 18.4 lb/lf x 15 ducts = 0.7 x 15 = 10.5 lb/lf differential)

Total differential = 10.5 lb/lf + (79.8 - 69.5) = 10.5 lb/lf + 10.3 lb per lf = 20.8lb/lf

Corrected Utility weight = 483.9 lb /lf + 20.8 lb/lf = 505 lb/lf

This small differential weight is unlikely to have a major impact on the temporary bridge design based on the capacity/demand ratios calculated by the Engineer of Record.

AASHTO Section 1.1.1 (General Provisions - Design Analysis) states:

"When these Specifications provide for empirical formulae, alternate rational analysis, based on theories or tests and accepted by the authority having jurisdiction, will be considered as compliance with these Specifications".

Based on AASHTO Section 1.1.1 (General Provisions - Design Analysis) the use of actual utility loads now known rather than the provisional 3000 lb/lf loading stated in Specification 01-53-13 Part 1.3.B is acceptable with the following provisions:

Contractor accepts responsibility for the statement regarding the City plans not to install any additional utilities in the bridge streets until the below grade structure is completed and the streets are restored.

Number	Subject	Status	Date Created	Date Required	Date Answered	Cost Impact	Proceed

BBI's Engineer of Record (PBA) has calculated the Demand over Capacity ratio is a minimum of 47% (2:1 Safety Factor) for the crane girders and the other girders Demand over Capacity ratio is 67% (Safety Factor 1.5:1)

T-0287 **BSE - Drain Inlet at the Northwest Corner of Minna and First street** **Closed** **04/04/2012** **04/14/2012** **04/12/2012** **Potentially** ☐

From: Balfour Beatty Infrastructure, Inc. Shad Gardner **To:** Turner Construction Compan Gary Krutsch **Answered By:** URS Corporation David Fyfe

Co-Author:

REQUEST:

Reference:
TG0300-210.1
TG0300-205.2
City Planning/KCA Emails

In order to comply with city standards BBII intended to install a standard city drain inlet on the north west corner of the Minna and First street intersection as required by our site civil drainage plan (submittal TG0300-205.2, TZ1030-01513A08.2 see also submittal TZ1030-015313A04.1 package TG0300-210.1 for product data). When potholing where this drain inlet is to be located, it was discovered that it would be in conflict with an existing gas line. BBII's design engineer KCA contacted the city planning department and got pre approval of the attached catch basin per the attached email and details. Please confirm that it is acceptable for us to install this catch basin in lieu of what was submitted in the aforementioned submittals.

SUGGESTION:

ANSWER: **Accept Suggestion:** ☐

Submission of the storm water inlet detail (attached to this RFI No. T-0287) for review and acceptance via the RFI process is not an acceptable method, therefore we have no comment on it.

In an effort to help expedite resolution of this conflict the following questions/requests are provided below:

What is the location (depth of cover and horizontal offsets to existing and proposed features) of the existing gas line (and electrical conduits/conductors) relative to the proposed storm water inlet?
The proposed storm water inlet appears to extend approximately 41" deep from top of rim/grade. From review of RUP sheets U-3409 and U-3410/Section T, it appears that there could be as little as 36" of cover over top of the existing PG&E gas line. If PG&E gas line is located within limits of proposed storm water inlet (plan view), there does not appear to be sufficient vertical clearance to install the proposed storm water inlet?
Specify engineered base material that is to be placed beneath proposed storm water inlet.
Provide a detailed sketch (plan and section) with submittal illustrating location of proposed storm water inlet and adjacent existing/proposed features.
Has PG&E reviewed and approved the proposed storm water inlet location?

Webcor/Obayashi Joint Venture

PROJECT MANAGEMENT - REQUEST AND ANSWERS LOG

30100 - Transbay Transit Center Project

Number	Subject	Status	Date Created	Date Required	Date Answered	Cost Impact	Proceed

Provide comfirmation that the proposed storm water inlet is in compliance with PG&E separation requirements

---

T-0288 **BSE - Request to Relocate Rathole to D9** **Closed** **04/05/2012** **04/15/2012** **04/10/2012** **Potentially** ☐

From: Balfour Beatty Infrastructure, Inc. Ural Yal **To:** Turner Construction Compan Gary Krutsch **Answered By:** Adamson Associates, Inc George Metzger

Co-Author:

REQUEST:

Attached please find Becho's request to relocate existing rathole to Shaft D9 where it will remain until Buttress work is complete. Below is Becho's exact wording:

"Due to the upcoming bridge construction on Fremont Street, Becho will be losing the existing location of the rathole. Becho requests that the existing rathole be relocated to Shaft D9 where it will remain for the duration of the Buttress Shaft Work. Becho proposes to pour Shaft D9 30 to 35 feet short from grade to accommodate the new rathole. Please advise if this is acceptable."

SUGGESTION:

ANSWER: **Accept Suggestion:** ☐

ARUP Response:

Arup understands there was no attachment, only the one page RFI.

Provided the hole remains cased at all times, or backfilled with CSLM (or an approved equal) whenever the casing is removed, this is acceptable.

T-0289 **BSE - Becho Requesting 9-20-2011 Meeting Minutes** **Closed** **04/11/2012** **04/21/2012** **05/08/2012** **Potentially** ☐

From: Balfour Beatty Infrastructure, Inc. Ural Yal **To:** Turner Construction Compan Gary Krutsch **Answered By:** Turner Construction Comp Gary Krutsch

Co-Author:

REQUEST:

"On September 20th, 2011 a meeting was held in the TJPA's office to discuss Noise Issues, Coring thru the Concrete Slab and Buttress Work. Present in the meeting where the following key representatives: Brian Dykes, Maria Ayerdi-Kaplan, Rebecca Armenta, and Steven Rule. Please request the meeting minutes for the meeting on 9/20/2011."

SUGGESTION:

ANSWER: **Accept Suggestion:** ☐

No meeting minutes were taken during this meeting.

T-0290 **BSE - Stabilization of Unimproved Soil Conditions Along the Interior Face of the C** **Closed** **04/11/2012** **04/21/2012** **04/18/2012** **Potentially** ☐

From: Balfour Beatty Infrastructure, Inc. Ural Yal **To:** Turner Construction Compan Gary Krutsch **Answered By:** Webcor Construction LP David Fields

Co-Author:

Number	Subject	Status	Date Created	Date Required	Date Answered	Cost Impact	Proceed

REQUEST:

Reference: 31 56 13 3.7 C
BBII Photo of CDSM Wall J-Line

BBII is requesting direction for a method to stabilize the unimproved soil conditions along the interior face of the CDSM wall.

The current condition of the CDSM wall includes unimproved soil conditions that have the potential to become detached from the wall and create large voids at the face of the wall. Please reference attached photo for visual details.

Based on our records, the CDSM wall met all the specification requirements for uniformity and improved soil as per section 31 56 13 of the contract specifications. Please note: Section 31 56 13 3.7 C's requirements (10% and 6") are satisfied by during the TJPA's Representative inspection of double-tube samples at the time of installation.

SUGGESTION:

ANSWER: **Accept Suggestion:** ☐

The quality of the CDSM wall is dependent upon the Contractors' chosen means and methods. If the Contractor has concerns regarding the integrity of the wall, the Contractor shall provide a remedial plan to the TJPA for consideration.

Conformance with the criteria within a sample does not relieve the Contractor of their responsibility that the entire wall meet the specifications.

T-0290.1 **BSE - Relevance of Unimproved Soil Pockets in CDSM Wall as it Relates to Waterp** **Closed** **05/28/2012** **06/07/2012** **06/05/2012** **Potentially** ☐

From: Webcor Construction LP Kirk Nielsen **To:** Turner Construction Compan Gary Krutsch **Answered By:** Adamson Associates, Inc George Metzger

Co-Author:

REQUEST:

Neither section 31 00 003.8.L or 07 12 10.3.2.C anticipated +1" cavities in the surface of the CDSM wall. However there are +6" cavities in the surface of the CDSM wall the result of unimproved soil pockets although BBII would contend the CDSM wall was installed in accordance with section 31 56 13.3.7.C. On 5/25/12 W/O spoke with Jonathan Lawrence President of Laurenco Systems (888) 321-3338 specified per section 07 12 10.2.1. Sections 31 00 00.3.8.L and 07 12 10.3.2.C speak of "buckling" due to cavities of the face of the CDSM wall. Mr. Lawrence was not concerned over the cavities in the face of this project's CDSM wall for two reasons:

1. Subsequent to his review of the bid documents the substrate for the waterproofing is the INS-1, depicted on 4/A1-8710, rather than the CDSM wall.

SUGGESTION:

ANSWER: **Accept Suggestion:** ☐

Per specification section 31 00 00 / 3.8 L: "On vertical surfaces of CDSM shoring walls, scarify high areas and fill in cavities exceeding 1" deep with patching cement to provide a reasonably uniform surface over which protection board, installed in a later contract, will span without buckling." Repair wall as required in the contract documents.

Number	Subject	Status	Date Created	Date Required	Date Answered	Cost Impact	Proceed

2. Due to the thickness of the substrate system:
a. ¼" Protection board
b. 3/16" (2) plys #15 felt
c. ¼" Drainage composite panel.
d. ½" INS-2
1-3/16" thick in total Mr. Lawrence was not concerned over a CDSM cavity less than

1'- 0" x 1'-0" x ½" deep.

When asked why he thought section 07 12 10.3.2.C was included in the below grade waterproofing section, if in fact the CDSM was not the substrate for the waterproofing, Mr. Lawrence responded that section 07 12 10.3.2.C was part of the Laurenco's template boiler plate specification really inapplicable to this application.

Please confirm that given the CDSM wall is not the waterproofing substrate system, rather items a-d above, and in light of the frequency of unimproved soil pockets, the project needn't infill the unimproved soil pockets less than 1'- 0" x 1'-0" x ½" deep.

T-0291 **BSE - Arup Requesting Exploratory Cores on Buttress Shaft D1** **Closed** **04/16/2012** **04/26/2012** **04/24/2012** **Potentially** ☐

From: Balfour Beatty Infrastructure, Inc. Ural Yal **To:** Turner Construction Compan Gary Krutsch **Answered By:** Adamson Associates, Inc George Metzger

Co-Author:

REQUEST:

Arup is requesting exploratory core samples at Buttress Shaft D1. Please provide direction on depths, sizes, and locations of cores.

SUGGESTION:

ANSWER: **Accept Suggestion:** ☐

Shaft D1 is, so far, non-conforming. It is in the Contractor's best interest to perform exploratory drilling to ascertain why they are unable to reach the required depth. Arup recommends that the Contractor do so, and that a plan be developed based on the observations made during the two previous attempts to place the shaft.

T-0291.1 **BSE - Arup Requesting Exploratory Cores on Buttress Shaft D1 Follow-Up** **Closed** **04/25/2012** **05/05/2012** **05/04/2012** **Potentially** ☐

From: Webcor Construction LP David Fields **To:** Turner Construction Compan Gary Krutsch **Answered By:** Adamson Associates, Inc George Metzger

Number	Subject	Status	Date Created	Date Required	Date Answered	Cost Impact	Proceed

Co-Author:

REQUEST:

Arup has requested to revise the response to RFI T-0291 in which the following question was presented -

"Arup is requesting exploratory core samples at Buttress Shaft D1. Please provide direction on depths, sizes, and locations of cores."

SUGGESTION:

ANSWER: **Accept Suggestion:** ☐

ARUP Response:

There has been further discussion regarding this proposal. Arup retracts the request to core within the footprint of buttress shaft D1.

T-0292 **BSE - First St Bridge Pier 1 Relocation** **Closed** **05/02/2012** **05/12/2012** **05/03/2012** **Potentially** ☐

From: Balfour Beatty Infrastructure, Inc. Ural Yal **To:** Turner Construction Compan Gary Krutsch **Answered By:** Turner Construction Comp Gary Krutsch

Co-Author:

REQUEST:

Reference:
Revised Drawings and Calculations for Revised Pier 1 Location

The western Pier 1 CIDH pile was rejected due to an anomaly. The corrective action is to replace it with a new pile 6'-0" south. Attached is the revised Bridge Drawings and the revised calculations. This package was emailed to the Bridge Design reviewers on 4-24-12 for expedited review. Please confirm that the new pier 1 location does not cause conflicts with the future structure.

SUGGESTION:

ANSWER: **Accept Suggestion:** ☐

The attachments are not appropriate for an RFI, they should be submitted through the submittal process. Resubmit RFI with pertinent information only

---

T-0292.1 **BSE - First St Bridge Pier 1 Relocation** **Closed** **05/03/2012** **05/13/2012** **05/04/2012** **Potentially** ☐

From: Balfour Beatty Infrastructure, Inc. Ural Yal **To:** Turner Construction Compan Gary Krutsch **Answered By:** Adamson Associates, Inc George Metzger

Co-Author:

REQUEST:

Reference:
SH-2100
SH-2101

Detail: The western Pier 1 CIDH pile was rejected due to an anomaly. The corrective action is to replace it with a new pile 6'-0" south. Attached are the revised Bridge Drawings showing new pile locations. Please confirm that the new pier 1 location does not cause conflicts with the

SUGGESTION:

ANSWER: **Accept Suggestion:** ☐

The 2 northernmost First Street temporary bridge piers to be shifted as depicted in this RFI is acceptable.

ARUP Response:

Arup takes no exception to this.

Number	Subject	Status	Date Created	Date Required	Date Answered	Cost Impact	Proceed

future structure. Please note the revised design documents were emailed to the Bridge Design reviewers on 4-24-12 for expedited review.

T-0293 **BSE - First Street Natoma blind spot hazard** **Closed** **06/05/2012** **06/15/2012** **06/15/2012** **Potentially** ☐

From: Balfour Beatty Infrastructure, Inc. Ural Yal **To:** Turner Construction Compan Gary Krutsch **Answered By:** URS Corporation David Fyfe

Co-Author:

REQUEST:

Regarding the temporary first street bridge. Contract specification section 01 53 13-1.3.A.4 requires us to provide a "8' -high solid barrier system" consisting of 1" plywood which does not allow viewing through the barrier. This is creating a blind turn hazard for traffic entering First street from Natoma street on the south side of First street. Please advise on how you would like to mitigate/fix this hazard.

SUGGESTION:

ANSWER: **Accept Suggestion:** ☐

Alternative barrier system shall be provided for pedestrian protection to mitigate vehicle/driver sight line obstructions (such as chainlink or other similar product). Contractor to verify alternative barrier product meets visibility requirements. Required height of barrier system is not changed.

Alternative barrier system system shall be designed by the temporary bridges design engineer of record and shall meet all code requirements including size of openings and resistance to all loading. Final product shall be continuous (including at transitions to other barrier systems), climb proof and topped with barbed wire. Contractor/engineer of record shall obtain all required approvals for alternate barrier system.

Vehicle barrier system/guardrail(s) are not modified by this RFI response.

T-0293.1 **BSE - First Street and Natoma blind spot hazard.** **Closed** **06/29/2012** **07/09/2012** **07/09/2012** **Potentially** ☐

From: Balfour Beatty Infrastructure, Inc. Ural Yal **To:** Turner Construction Compan Gary Krutsch **Answered By:** Transbay PMPC Douglas Jacobson

Co-Author:

REQUEST:

Please find attached sketch SK-0293 for proposed pedestrian barrier at the First st. bridge. Please confirm this is acceptable in lieu of previously installed plywood barrier.

SUGGESTION:

ANSWER: **Accept Suggestion:** ☐

Contractor to install 9 gauge galvanized chain link fence with 2" mesh along zone of previously installed plywood barrier on First Street Temporary Bridge. Secure to existing bridge posts MC6x18 with 1/2"

Number	Subject	Status	Date Created	Date Required	Date Answered	Cost Impact	Proceed

diameter galvanized bolts 2' o.c. on each post with full-length 1" x 3/16" flat bar. Install 1/4" galv. top and bottom wire with 3/8" turnbuckles. Secure fence to wire with 11 gauge wire ties. Double twist ends of chain link mesh are on top. See TJPA Spec 32 31 13 Chainlink Fences and Gates. For barbed wire at the top, see 32 31 13 2.5 and 2.8 for requirements. Install barbed wire support arms at 45° tilted away from bridge.

Temporary Bridge engineer of record shall verify that the loading from 1" thick plywood to chain link mesh is not detrimental to the Temporary Bridge design.

T-0294 **BSE - Expected CDSM wall deflection** **Closed** **06/14/2012** **06/24/2012** **07/02/2012** **Potentially** ☐

From: Balfour Beatty Infrastructure, Inc. Ural Yal **To:** Turner Construction Compan Gary Krutsch **Answered By:** Turner Construction Comp Jack Adams

Co-Author:

REQUEST:

BBII requests the anticipated deflection values for the CDSM wall obtained in ARUP's design of the shoring wall and used to determine appropriate action trigger levels specified in section 31 09 13.

SUGGESTION:

ANSWER: **Accept Suggestion:** ☐

The request for information contained in this RFI is rejected as overly broad, burdensome and seemingly unrelated to any legitimate enquiry relating to the contract or the required work. This is not the proper use of an RFI. Please follow the requirements specified in section 31 09 13 regarding maximum allowable movements and corrective action trigger levels.

T-0295 **BSE - 301 Mission drive way** **Closed** **06/19/2012** **06/29/2012** **06/24/2012** **Potentially** ☐

From: Webcor Construction LP Robert Kjome **To:** Turner Construction Compan Gary Krutsch **Answered By:** Webcor Construction LP Kirk Nielsen

Co-Author:

REQUEST:

Per conversation in previous coordination meeting between Balfour Beatty Webcor, Turner, TJPA and 301 Mission¿s management. We are confirming direction to extend the sidewalk past the limits shown in our grading and drainage submittal through the limits of the 301

SUGGESTION:

ANSWER: **Accept Suggestion:** ☐

The work BBII has proceeded with at the 301 Mission driveway is in general conformance with the 6/8/12 TCCO, W/0, BBII, Millennium Mgmt. meeting. The direction however is from, to include however limited to, base contract specification section:

Number	Subject	Status	Date Created	Date Required	Date Answered	Cost Impact	Proceed

Mission drive way. It is also our understanding that we are directed to match the color of the existing black sidewalk in this area. Please confirm.

00 08 13.1.8.E, 0115 40.1.4, and or General Excavation Permit #12E-0181. The TJPA is not anticipating added cost the result of this issue.

T-0296 **BSE - Clarification of Soil Segregation and Disposal per spec. section 01 13 50/SM Closed** **06/27/2012** **07/07/2012** **06/29/2012** **Potentially** ☐

From: Webcor Construction LP Kirk Nielsen **To:** Turner Construction Compan Gary Krutsch **Answered By:** Transbay PMPC Roger Rothenburger

Co-Author:

REQUEST:

On 6/26/12 BBII clarified their desired method / location of disposing of the Zone-3 concrete rubble was to deliver it to Brisbane.

Section 01 13 50 / 5.2.1 of the SMP states:

"TJPA shall be provided documentation from the excavation contractor that the accepting landfill for the soil from Transbay Terminal project has been provided with and has reviewed all analytical data collected from the Site."

Brisbane has refused to provide the aforementioned documentation.

In order to facilitate BBII's desired method / location of disposing of the Zone-3 concrete rubble W/O requests that the TJPA clarify, exclusively for the subject Zone-3 rubble, that the documentation required by the TJPA consists only of standard shipping tags and invoices.

SUGGESTION:

ANSWER: **Accept Suggestion:** ☐

Roger Rothenburger 6/28/2012 Section 01-13-50 Part 1.1.C (Hazardous Materials Procedures - Summary) references "Site Mitigation Plan, Transbay Transit Center, Treadwell & Rollo, March 24, 2010" report and states,

"Contractor's work shall include the management of existing soils in a manner consistent with the requirements of the Contract Document including the following reports, "Site Mitigation Plan, Transbay Transit Center, Treadwell & Rollo, March 24, 2010", appended to this Sectin as 01 13 50/APA, and Section 00 03 35 ..."

Section 5.2.1 (Soil Segregation and Disposal) of the Treadwell & Rollo Site Mitigation Plan, 01-13-50/APA states, "Before any excavation activities begin at the Site, TJPA shall be provided documentation from the excavation contractor that the accepting landfill facility for the soil from Transbay Terminal project has been provided with and has reviewedall analytical data collected from the Site. TJPA shall approve all off-site disposal facilities and soil transportation contractors, including, without limitation, available insurable coverge, and prior to the shipment of any soil or other waste materials (emphasis added)."

TJPA in the interest of facilitating disposal of material to Brisbane and other disposal sites removes from Site Mitigation Plan Section 5.2.1 by Treadwell & Rollo, the highlighted words, "with and has reviewed" .

The only requirement is that some documentation

Number	Subject	Status	Date Created	Date Required	Date Answered	Cost Impact	Proceed

from BBI (the "excavation contractor" that the "analytical data collected from the Site" has been provided to the disposal site.

T-0296.1 **BSE - Clarification of Soil Segregation and Disposal per spec** **Closed** **07/02/2012** **07/12/2012** **07/02/2012** **Potentially** ☐

From: Webcor Construction LP Kirk Nielsen **To:** Turner Construction Compan Gary Krutsch **Answered By:** Turner Construction Comp Jack Adams

Co-Author:

REQUEST:

RFI response T-0296 was overly broad and failed to conform to previous conversations between TJPA, TCCO, & W/O.

RFI T-0296 Inquiry:

On 6/26/12 BBII clarified their desired method / location of disposing of the Zone-3 rubble was to deliver it to Brisbane.

Section 01 13 50 / 5.2.1 of the SMP states:

"TJPA shall be provided documentation from the excavation contractor that the accepting landfill for the soil from Transbay Terminal project has been provided with and has reviewed all analytical data collected from the Site."

Brisbane has refused to provide the aforementioned documentation.

In order to facilitate BBII's desired method / location of disposing the Zone-3 concrete rubble W/O requests that the TJPA clarify, exclusively for the subject Zone-3 rubble, that the documentation required by the TJPA consists only of standard shipping tabs and invoices.

RFI T-0296.1 Inquiry:

Please confirm, in order to facilitate BBII's desired method / location of disposing the Zone-3 concrete rubble W/O requests that the TJPA clarify, exclusively for the subject

SUGGESTION:

ANSWER: **Accept Suggestion:** ☐

7/2/2012 Confirmed - exclusively for the subject Zone-3 rubble, the documentation required by the TJPA consists only of standard shipping tabs and invoices.

Number	Subject	Status	Date Created	Date Required	Date Answered	Cost Impact	Proceed

Zone-3 rubble, that the documentation required by the TJPA consists only of standard shipping tabs and invoices.

T-0297 **BSE - Phase 3 Utilities on Beale Street** **Closed** **06/28/2012** **07/08/2012** **07/10/2012** **Potentially** ☐

From: Webcor Construction LP Joanne Filipas **To:** Turner Construction Compan Gary Krutsch **Answered By:** AECOM Technical Servic Eric Zagol

Co-Author:

REQUEST:

Reference attached sketch.

The BSE subcontractor is proposing to relocate the Beale Street temporary bridge to the east; similar to the attached sketch. Please confirm if this will impact any future utilities, i.e. PG&E phase 3 on Beale Street.

SUGGESTION:

ANSWER: **Accept Suggestion:** ☐

The Beale Street Phase I temporary utilities were relocated outside and east of the CDSM shoring wall. The RUP project design intent is that Phase II utilities will not be suspended from the temp bridge in Beale Street. In the future, permanent Phase II utilities on Beale Street will be constructed within a designated area above the Transit Center train box termed the "utility corridor". Please coordinate your work with CM/GC.

T-0298 **BSE -Timber Pile Extraction at grid line 19 to 20 and 24 to 25** **Closed** **06/29/2012** **06/29/2012** **07/02/2012** **Potentially** ☐

From: Webcor Construction LP Robert Kjome **To:** Turner Construction Compan Gary Krutsch **Answered By:** Adamson Associates, Inc George Metzger

Co-Author:

REQUEST:

BBII completed the timber pile extraction test section in zone 2 on 06/12/2012. Based on the data recorded by ARUP inclinometers, please advise if BBII can continue with the timber pile extraction at grid line 19 to 20 and grid line 24 to 25 using non ground deformation control methods ("free pull').

The attached drawings (D-21 02 and D-21 03) for reference.

Please advise.

SUGGESTION:

ANSWER: **Accept Suggestion:** ☐

6/29/2012 ARUP Response: This is acceptable.

☐

Webcor/Obayashi Joint Venture

PROJECT MANAGEMENT - REQUEST AND ANSWERS LOG

30100 - Transbay Transit Center Project

Number	Subject	Status	Date Created	Date Required	Date Answered	Cost Impact	Proceed
T-0299	**Micropile Performance Testing**	**Open**	**07/16/2012**	**07/26/2012**		**Potentially**	

From: Balfour Beatty Infrastructure, Inc. Ural Yal **To:** Turner Construction Compan Gary Krutsch **Answered By:**

Co-Author:

REQUEST:

Reference Part 3.2 "Performance And Proof Testing" of Specification Section 31 63 33

In order to expedite the Micropile Performance Testing review period, BBII is requesting to conduct the performance testing of micropiles prior to excavating Level 5, at approximately -32' Elevation, concurrent with the installation of Level "0" struts. See attached sketch for details.Please confirm that it is acceptable.

SUGGESTION:

ANSWER:

Accept Suggestion: ☐

T-0300	**Micropile Performance Test Pile Relocations**	**Open**	**07/17/2012**	**07/27/2012**		**Potentially**	☐

From: Balfour Beatty Infrastructure, Inc. Yuriy Stryzheus **To:** Turner Construction Compan Gary Krutsch **Answered By:**

Co-Author:

REQUEST:

Please refer to BBII's micropile layout submittal and RFI T-262 that references IFB- Below Grade package for coordination of micropile layouts.

Based on the information provided within BBII's Micropile layout drawing and Below Grade package drawings S1-2023 through S1-2027, the four micropiles subjected to performance testing are labeled as: W411, W396, E383, and E401.

BBII requests to conduct the performance test in Zone 1 at pile No. W604 instead of pile No. W411, which is located underneath Struts No. 6 & 7.

Similarly, BBII requests to test the piles numbered as W473, E477, & E599, instead of the piles numbered as W396, E383, & E401, which are located underneath the trestle.

Please confirm that it is acceptable.

SUGGESTION:

ANSWER:

Accept Suggestion: ☐

T-267	**BSE - DI Installation at First Street**	**Closed**	**11/29/2011**	**12/09/2011**	**12/13/2011**	**Potentially**	☐

From: Webcor Construction LP Nhi Tran **To:** Turner Construction Compan Gary Krutsch **Answered By:** AECOM Technical Servic Eric Zagol

Co-Author: Balfour Beatty Infrastructure, Inc. Ural Yal

Webcor/Obayashi Joint Venture

PROJECT MANAGEMENT - REQUEST AND ANSWERS LOG

30100 - Transbay Transit Center Project

Number	Subject	Status	Date Created	Date Required	Date Answered	Cost Impact	Proceed

REQUEST:

Reference RFI U-101, Sheet U-3021

The RFI response U-101 dated 02-28-2011 eliminates the CB #501 from the RUP contractor's scope of work. However there has been no replacement or adequate surface water control system neither suggested nor installed to replace the CB # 501.

BBII recommends that this catch basin # 501, be installed per the original design to control surface water. Please confirm it will installed.

SUGGESTION:

ANSWER: **Accept Suggestion:** ☐

CB#501 was deleted from RUP due to unforeseen field conditions. For RUP, runoff from adjacent area to drain south to existing CB at STA 4+20. Existing CB at STA 4+20 to remain in place and active at completion of RUP.

BSE Contractor to provide stormwater control on site accordance with BSE documents.

T-268 **BSE - Rebar in Secondary Shafts** **Closed** **12/08/2011** **12/18/2011** **12/12/2011** **Potentially** ☐

From: Webcor Construction LP Joanne Filipas **To:** Turner Construction Compan Gary Krutsch **Answered By:** Arup Kevin Clinch

Co-Author:

REQUEST:

Reference GT-2201, Installation Sequence Note 5

Please confirm the reinforcement in the secondary shafts should be installed in the last buttress shaft of each row.

SUGGESTION:

ANSWER: **Accept Suggestion:** ☐

As described in Note 5 on sheet GT-2201, since the cost-add option has been excercised, the reinforcement shall be installed in the secondary shafts along rows 15 and 16.5.

END OF REPORT

Report Parameters

Project:	30100	Status Class:	
Sent To:		Run Date:	07/19/2012
Restrict Value of:	C	Run Time:	02:49 PM
From Date:		Operator:	NTRAN
To Date:		Report Code:	PM3012
Status:			

Webcor/Obayashi Joint Venture

PROJECT MANAGEMENT - REQUEST AND ANSWERS LOG

30100 - Transbay Transit Center Project

Number	Subject	Status	Date Created	Date Required	Date Answered	Cost Impact	Proceed
U-0001	First Street Electrical or Telecom Trench	Closed	10/25/2010	11/08/2010	11/05/2010	Potentially	☐

From: Webcor Construction LP Joanne Filipas **To:** Turner Construction Compan Daphne Faulkner **Answered By:** AECOM Technical Servic Eric Zagol

Co-Author:

REQUEST:

Ref U-2016, U-2020 and Attached

Sheet U-2016 calls out a 9-6", 1-4" E by PG&E. Sheet U-2020 calls out the same trench as AT&T's. The section shows it as a AT&T's. Please confirm this trench is AT&T's.

SUGGESTION:

ANSWER: **Accept Suggestion:** ☐

Sheet U-2020 call out for the subject trench is correct, the trench is AT&T's.

Number	Subject	Status	Date Created	Date Required	Date Answered	Cost Impact	Proceed
U-0002	Conflict with Electrical and Water Pipe Station 5.50	Closed	10/25/2010	11/08/2010	11/05/2010	Potentially	☐

From: Webcor Construction LP Joanne Filipas **To:** Turner Construction Compan Daphne Faulkner **Answered By:** Webcor Construction LP Jeffrey Negley

Co-Author:

REQUEST:

Ref U-3408 and attached.

During the review of the model, we have found that a conflict exists between the joint trench electrical conduits and water pipes. Please advise.

SUGGESTION:

ANSWER: **Accept Suggestion:** ☐

Adjust Joint Trench per U-3400 General Notes 2, 3, 5 and 6.

Construct hydrant lateral to maintain a minimum 28-inch cover (18-inch below street concrete base) and adjust joint trench at lateral crossing to maintain a minimum 6-inch separation at crossing per U-3400 General Note 6.

Number	Subject	Status	Date Created	Date Required	Date Answered	Cost Impact	Proceed
U-0003	Conflict Between Electrical trench and telecom conduit near station 1.50	Closed	10/25/2010	11/08/2010	11/05/2010	Potentially	☐

From: Webcor Construction LP Joanne Filipas **To:** Turner Construction Compan Daphne Faulkner **Answered By:** AECOM Technical Servic Eric Zagol

Co-Author:

REQUEST:

Ref U-2007, and attached

During our review of the model, we have found a conflict between the electrical joint trench and telecom conduit near station 1.50 on Minna Street. Please advise.

SUGGESTION:

ANSWER: **Accept Suggestion:** ☐

4-6" Electric ductbank is to cross under the 6-4" Telecommunications ductbank, see U-3407 and U-3410 Section E.

Number	Subject	Status	Date Created	Date Required	Date Answered	Cost Impact	Proceed
U-0004	Telecom and Water Conflict Station 3.25	Closed	10/25/2010	11/08/2010	11/05/2010	Potentially	☐

From: Webcor Construction LP Joanne Filipas **To:** Turner Construction Compan Daphne Faulkner **Answered By:** AECOM Technical Servic Eric Zagol

Co-Author:

Number	Subject	Status	Date Created	Date Required	Date Answered	Cost Impact	Proceed

REQUEST:

Ref U-2007 and attached.

During our review of the model, we have found that the water latereal running north on Minna street is in conflict with telecom conduits in the joint trench. Please advise.

SUGGESTION:

ANSWER: **Accept Suggestion:** ☐

Adjust Joint Trench per U-3400 General Notes 2, 3, 5 and 6.

Construct hydrant lateral to maintain a minimum 28-inch cover (18-inch below street concrete base) and adjust Joint Trench at lateral crossing.

U-0005 **Water, Telecom and Electrical Conflict at Station 5.50** **Closed** **10/25/2010** **11/08/2010** **11/05/2010** **Potentially** ☐

From: Webcor Construction LP Joanne Filipas **To:** Turner Construction Compan Daphne Faulkner **Answered By:** AECOM Technical Servic Eric Zagol

Co-Author:

REQUEST:

Ref U-2008, U-2030 and attached.

During our review of the model, we have found that the water system running in the east/west direction along Minna Street at station 5.50 is in conflict at three locations with the Electrical/Telecom joint trench. Please advise.

SUGGESTION:

ANSWER: **Accept Suggestion:** ☐

At water laterals crossing Joint Trench:
- Adjust Joint Trench per U-3400 General Notes 2, 3, 5 and 6.
- Construct hydrant lateral to maintain a minimum 28-inch cover (18-inch below street concrete base) and adjust Joint Trench at lateral crossing.

At water main crossing with 6-4-inch conduit constructed by AT&T in Phase II (Sheet U-2030):
- Construct water main as shown.
- AT&T to design and construct Phase II AT&T conduit to avoid water main constructed under TG04.5.1.

U-0006 **Gas and Electrical Conduit Conflict** **Closed** **10/25/2010** **11/08/2010** **11/05/2010** **Potentially** ☐

From: Webcor Construction LP Joanne Filipas **To:** Turner Construction Compan Daphne Faulkner **Answered By:** AECOM Technical Servic Eric Zagol

Co-Author:

REQUEST:

Ref U-2008, U-2030 and attached.

A conflict exists between the 4" HPG and electrical conduits near station 6.45. Please advise.

SUGGESTION:

ANSWER: **Accept Suggestion:** ☐

Electrical trenches at STA 6+42 +/- and at STA 6+85 +/- as shown on Sheet U-2030 are Relocation of Utilities Project Phase II work Not Included in Package TG04.5.1. The FINAL alignment and elevation of these trenches will be coordinated and designed by

Number	Subject	Status	Date Created	Date Required	Date Answered	Cost Impact	Proceed

others pending the conduit penetration elevations through the Transit Center perimeter shoring wall and into the Transit Center West Center Electric Vault. As shown in Sheet U-3410 Section Q electric ductback is located below the 4-inch HPG. Per U-3410 General Notes 2, 3, 5 and 6 adjust Joint Trench at crossings to allow conduits to stub out below the 4-inch HPG.

U-0007 **Water and Electrical Conduit Conflict at Station 6.50** **Closed** **10/25/2010** **11/08/2010** **11/05/2010** **Potentially** ☐

From: Webcor Construction LP Joanne Filipas **To:** Turner Construction Compan Daphne Faulkner **Answered By:** AECOM Technical Servic Eric Zagol

Co-Author:

REQUEST:

Ref U-2030 and attached.

The water line running east/west along Minna street is in conflict with an Electrical trench at station 6.45. Please advise.

SUGGESTION:

ANSWER: **Accept Suggestion:** ☐

Electrical trenches at STA 6+42 +/- and at STA 6+85 +/- as shown on Sheet U-2030 are Relocation of Utilities Project Phase II work Not Included in Package TG04.5.1. The FINAL alignment and elevation of these trenches will be coordinated and designed by others pending the conduit penetration elevations through the Transit Center perimeter shoring wall and into the Transit Center West Center Electric Vault. U-2030 elevation shows the ductbancks crossing under the 8-inch water in Minna Street.

U-0008 **Gas and Water Conflict at Station 7.30** **Closed** **10/25/2010** **11/08/2010** **11/05/2010** **Potentially** ☐

From: Webcor Construction LP Joanne Filipas **To:** Turner Construction Compan Daphne Faulkner **Answered By:** AECOM Technical Servic Eric Zagol

Co-Author:

REQUEST:

Ref U-2009 and attached.

A conflict exists between the HPG and water line at station 7.30 along Minna Street. Please advise.

SUGGESTION:

ANSWER: **Accept Suggestion:** ☐

Adjust Joint Trench per U-3400 General Notes 2, 3, 5 and 6.

Construct hydrant lateral to maintain a minimum 28-inch cover (18-inch below street concrete base) and adjust joint trench at lateral crossing to maintain a minimum 6-inch separation at crossing per U-3400 Note 6 with approval from PG&E on-site inspector.

Webcor/Obayashi Joint Venture

PROJECT MANAGEMENT - REQUEST AND ANSWERS LOG

30100 - Transbay Transit Center Project

Number	Subject	Status	Date Created	Date Required	Date Answered	Cost Impact	Proceed

---

U-0009 **Joint Trench and Sewer Conflict on First Street at Station 9.25** **Closed** **10/25/2010** **11/08/2010** **11/05/2010** **Potentially** ☐

From: Webcor Construction LP Joanne Filipas **To:** Turner Construction Compan Daphne Faulkner **Answered By:** AECOM Technical Servic Eric Zagol

Co-Author:

REQUEST:

Ref U-2009 and attached

The sewer line running in the north south direction at station 9.25 along First street is in conflict with the electrical joint trench. Please advise.

SUGGESTION:

ANSWER: **Accept Suggestion:** ☐

Adjust Joint Trench per U-3400 General Notes 2, 3, 5 and 6.

Joint Trench crossing 10-inch SD at STA 9+29 +/- is shown in U-3409 and U-3031 Profile D.

U-0010 **Electrical Line Transition In Joint Trench from Minna to Shaw Alley** **Closed** **10/25/2010** **11/08/2010** **11/05/2010** **Potentially** ☐

From: Webcor Construction LP Joanne Filipas **To:** Turner Construction Compan Daphne Faulkner **Answered By:** AECOM Technical Servic Eric Zagol

Co-Author:

REQUEST:

Ref U-3408, Q/U-3410, P/U-3410 attached.

Section Q/U-3410 shows a 5" and 2" electrical line on the north side of the joint trench. Section P/U-3410 shows the same 5" and 2" electrical lines on the west side of the joint trench as it turns north on Shaw Alley. Is the intent for these electrical lines to cross within the joint trench? Please advise.

SUGGESTION:

ANSWER: **Accept Suggestion:** ☐

No. The 5-inch and 2-inch electric conduits in Section Q/U-3410 should be located on the south side of the Joint Trench

---

U-0011 **Manhole #203 Elevation Conflict** **Closed** **10/25/2010** **11/08/2010** **11/05/2010** **Potentially** ☐

From: Webcor Construction LP Joanne Filipas **To:** Turner Construction Compan Daphne Faulkner **Answered By:** AECOM Technical Servic Eric Zagol

Co-Author:

REQUEST:

Ref U3031, U3007 and attached.

SUGGESTION:

ANSWER: **Accept Suggestion:** ☐

Construct sewer MH#203 rim to match existing grade

Number	Subject	Status	Date Created	Date Required	Date Answered	Cost Impact	Proceed

Detail B/U-3031 shows the elavtion of manhole #203 at 21.75 however U-3007 calls out an elevation of 22.0. Please confirm what the elavation of Manhole #203 is.

at EL 22.0 +/- as shown on Sheet U-3007.

U-0012 **Electrical/Telecom Conflicts between Plan and Section** **Closed** **10/25/2010** **11/08/2010** **11/05/2010** **Potentially** ☐

From: Webcor Construction LP Joanne Filipas **To:** Turner Construction Compan Daphne Faulkner **Answered By:** AECOM Technical Servic Eric Zagol

Co-Author:

REQUEST:

Ref U-1108. U4000, H/4001 and attached.

1. Section H/U-4001 shows the (E)(6)4"E(D) just north of the (E)T(NR) however the plans show it north of the (E) SS. Please advise.

SUGGESTION:

ANSWER: **Accept Suggestion:** ☐

Existing Topographic and Utility Survey Sheets and Sheet U-1108 show the horizontal location north of the (E) sewer. Section H on Sheet U-4001 shows the subject (E)(6)4"(D) at two locations, one is incorrectly shown. The horizontal location of the subject duct in Section H on Sheet U-4001 should be consistent with location shown in the Existing Topographic and Utility Survey Sheets and Sheet U-1108.

U-0013 **Water Connections at Howard** **Closed** **10/25/2010** **11/08/2010** **11/05/2010** **Potentially** ☐

From: Webcor Construction LP Joanne Filipas **To:** Turner Construction Compan Daphne Faulkner **Answered By:** AECOM Technical Servic Eric Zagol

Co-Author:

REQUEST:

Ref I-3120, U-3116, U-3112

There is a discrepancy in the elevations called out for the 12" water line connections at Howard. The First and Howard connection shows the elevation at 13 on U-3120 and no elevation is provided on Howard. If we were to scale, the elevation should be at 14. Please provide the connection elevation.

SUGGESTION:

ANSWER: **Accept Suggestion:** ☐

Construct the 12"x12"x12" TEE at center line EL 13.0 as shown on Sheet U-3120.

U-0014 **Size of Gas Line on First Street** **Closed** **10/25/2010** **11/08/2010** **11/05/2010** **Potentially** ☐

From: Webcor Construction LP Joanne Filipas **To:** Turner Construction Compan Daphne Faulkner **Answered By:** AECOM Technical Servic Eric Zagol

Number	Subject	Status	Date Created	Date Required	Date Answered	Cost Impact	Proceed

Co-Author:

REQUEST:

Ref U-2003, U-2021 and attached.

The HPG line on U-2003 is 4". The same gas line on U-2021 is shown as 2". What size is the gas line?

SUGGESTION:

ANSWER: **Accept Suggestion:** ☐

HPG by PG&E on First St. is 4" as shown on Sheet U-2003.

U-0015 **LEED Requirements for RUP work** **Closed** **10/26/2010** **11/09/2010** **11/05/2010** **Potentially** ☐

From: Webcor Construction LP Joanne Filipas **To:** Turner Construction Compan Daphne Faulkner **Answered By:** Transbay PMPC Guy Hollins

Co-Author:

REQUEST:

RE: Specification 01-81-13 1.1.3B

The specification section referenced provides a drawing which outlines the "LEED Project Limit". On this drawing, the limit line is drawn on Minna Street and Natoma Street and incorporates First Street, Fremont Street and Beale Street where they cross the new building. Is it the intent of this specification section that the RUP work in the areas enclosed are to be incorporated into the LEED program?

SUGGESTION:

ANSWER: **Accept Suggestion:** ☐

It is not the intent of this specification section apply LEED requirements to the RUP work.

U-0016 **Street Light Relocation** **Closed** **11/02/2010** **11/16/2010** **11/17/2010** **Potentially** ☐

From: Webcor Construction LP Jeffrey Negley **To:** Turner Construction Compan Michelle Smith **Answered By:** AECOM Technical Servic Eric Zagol

Co-Author:

REQUEST:

Plan/Drawing Reference: U-3201

Please identify the PG&E manhole on Second St & Minna, where we are to connect the new conduit for the relocated street light on the west end of Minna St.
The connection manhole depicted on the plans does not appear to be owned by PG&E - the cover is marked "Steam".
Please review and advise.

SUGGESTION:

ANSWER: **Accept Suggestion:** ☐

11/8/2010
Eric Zagol
Alignment of conduit shall be south of existing NRG Energy steam manhole, adjacent to existing street light conduit as shown, connecting to and intercepting existing street light conduit in PG&E MH E-1319 immediately west of the existing steam manhole. Coordinate connection with PG&E through BLHP and TJPA's representative.

Webcor/Obayashi Joint Venture

PROJECT MANAGEMENT - REQUEST AND ANSWERS LOG

30100 - Transbay Transit Center Project

Number	Subject	Status	Date Created	Date Required	Date Answered	Cost Impact	Proceed
U-0017	**JT Conflict with Basement @ Rickenbacker Rest.**	**Closed**	**11/09/2010**	**11/23/2010**	**01/12/2011**	**Potentially**	☐

From: Webcor Construction LP Jeffrey Negley **To:** Turner Construction Compan Michelle Smith **Answered By:** AECOM Technical Servic Eric Zagol

Co-Author:

REQUEST:

Reference sheet U-3407.
PG&E has been potholing on the south east corner of Minna @ 2nd St. for a new gas line over the past number of days. We have observed in their potholes that a basement structure for the Rickenbacker Restaurant (123 2nd St.) extends out beyond the property line and under the sidewalk, along both Minna and 2nd Street. The basement appears to extend almost up to the roadway curb on 2nd Street and to face of curb or beyond on Minna. The joint trench at its current alignment (on Plan Sheet U-3407) along the south east corner of 2nd & Minna will be in conflict with this basement structure.
Please review and advise.

SUGGESTION:

ANSWER: **Accept Suggestion:** ☐

E. Zagol 1/11/11

See revised Joint Trench Plan and Elevation Phase I Plans titled "Revisions - Minna Street 12/27/10" for realignment of Joint Trench.

****

E. Zagol 12/17/10

The Joint Trench as currently shown in Sheet U-3407 is in conflict with the 123 Second Street sidewalk basement between Minna Street stations 0+75 and 0+90.

Separate from the conflict mentioned above, PG&E has requested TJPA to add additional conduits to the Joint Trench.

Revised drawings will be provided that address the following:

Realignment of Joint Trench west of station 2+00, realignment of the sewer west of station 2+25, and revisions to the water line (vertical and hydrant lateral) west of station 1+02 to address the conflict with 123 Second Street sidewalk basement.
Modifications to Joint Trench sections from First Street to Second Street to accommodate PG&E's additional conduits.
Modifications at the future Transit Center stubouts to accommodate PG&E's Joint Trench configuration revisions.
RFI-U0050.
****
****

E. Zagol 11/18/10

AECOM will attend the planned site visit to 123 Second Street on 11/19/10 to evaluate conflict. We are actively working with PG&E to identify options for the Joint Trench alignment west of STA 1+12 if 123 Second Street basement is confirmed in conflict.

Number	Subject	Status	Date Created	Date Required	Date Answered	Cost Impact	Proceed

On 11/17/10 PG&E reported at TJPA's weekly PG&E coordination meeting that the preferred realignment option, north of the proposed sewer utilizing existing PG&E MH 1319, was electrically feasible. PG&E has scheduled field crews for the week of 11/29/10 to confirm that there is adequate space in their existing manholes to facilitate the preferred option.

Proceed with Joint Trench subsurface investigations and Joint Trench shop drawing preparation in accordance with plans and specifications for the Joint Trench east of STA 1+12 to STA 9+31.32 at First Street.

U-0018 **AWSS caps requirement** **Closed** **11/10/2010** **11/10/2010** **11/24/2010** **Potentially** ☐

From: Webcor Construction LP Jeffrey Negley **To:** Turner Construction Compan Michelle Smith **Answered By:** AECOM Technical Servic Eric Zagol

Co-Author:

REQUEST:

Please refer to sheets MA-5, MA-8, U-1120, U-1121, see attached.

Please confirm that the AWSS caps shown on sheets MA-5 and MA-8 are required prior to the installation of the new PG&E ductbank (sheet U-2021) on the East side of First St.

SUGGESTION:

ANSWER: **Accept Suggestion:** ☐

RFI U-0018 to be closed as RFI U-0018.1 was created to address a two part question that arose. RFI U-0018.1 was answered on 11/24/10 and the RFI is marked closed.

U-0018.1 **AWSS Removal Work on First Street - Scope Clarification** **Closed** **11/22/2010** **11/24/2010** **11/24/2010** **Potentially** ☐

From: Webcor Construction LP Jeffrey Negley **To:** Turner Construction Compan Michelle Smith **Answered By:** Webcor Construction LP Jeffrey Negley

Co-Author:

REQUEST:

The First Street AWSS cap issue has created a two part question. RFI #U-0018 will remain open to track the sequence of installation regarding installation of the AWSS cap and PG&E trench.

SUGGESTION:

ANSWER: **Accept Suggestion:** ☐

11/23/2010
Eric Zagol
See attached sketch from Michael Smith (SFDPW BOE) indicating work required to abandon existing 10"

Number	Subject	Status	Date Created	Date Required	Date Answered	Cost Impact	Proceed

RFI #U-0018.1 addresses scope.
Refer to sheets MA-5, MA-8, U-1120, U-1121, and Guy Hollins email attached.

Per conversations between Guy Hollins, Eric Zagol and Michael Smith (mechanical engineer with DPW Bureau of Engineering), please clarify the work involved to install the two AWSS caps on First & Howard and First & Mission St. Also produce a list of material required to complete the work. Provide drawing/ sketch if necessary to clarify scope of work.

AWSS main in First St.

U-0019 **Street Light Location** **Closed** **11/10/2010** **11/12/2010** **12/02/2010** **Potentially** ☐

From: Webcor Construction LP Jeffrey Negley **To:** Turner Construction Compan Michelle Smith **Answered By:** AECOM Technical Servic Eric Zagol

Co-Author:

REQUEST:

Please provide layout for the Street Lights shown to be relocated on sheets U-3201 and U-3202.

SUGGESTION:

ANSWER: **Accept Suggestion:** ☐

Rev. 12/1/10

As dicussed during the site visit on 11/24/10 with Turner, Webcor, Trinet and AECOM to review SFPUC BLHP proposed street light markings, the proposed locations by SFPUC BLHP required a final review by BLHP due to conflicts with the Joint Trench and a FDC. SFPUC BHLP provided additional clarification on street light locations on 12/1/10.

Relocate existing street lights as shown to be relocated on U-3201 to the north side of Minna St. at STA 2+89.25 (center of pole) and at STA 4+12.03 (center of pole). Locate foundation, street light per SFDPW Standard Plans A-33,308 File No. 87,210. Provide guard post in accordance with SFDPW Standard Plan A-33,308 File No. 87,210 for the street light relocated to STA 2+89.25.

****

U-3201 shows two street lights to be relocated from

Number	Subject	Status	Date Created	Date Required	Date Answered	Cost Impact	Proceed

the south side of Minna St. to the North Side of Minna St. Based on informal discussions with Jason Dunne (W/O) proposed street light locations have bee marked by Trinet along Minna St. at the locations shown on U-3201. TJPA's representative (Tuner) is scheduling SFPUC BLHP to inspect the proposed locations as marked. Following inspection by SFPUC BLHP, layout dimensions will be provided.

U-3202 shows one street light to be recoated and is to be relocated to an existing traffic signal base as noted in U3202. Remove and salvage traffic post and signal equipment as shown on U-3302.

U-0019.1 **Light Pole at Station 4+12.03: Reroute existing conduit** **Closed** **12/21/2010** **12/31/2010** **02/02/2011** **Potentially** ☐

From: Webcor Construction LP David Hungerford **To:** Turner Construction Compan Kevin Chiu **Answered By:** Turner Construction Comp Michelle Smith

Co-Author:

REQUEST:

Reference: RFI #U-0019, attached picture and sheet U-3201

The streetlight at station 4+12.03 was laid out per the response to RFI #U-0019. When the new location was potholed, a number of existing utilities were discovered. Per inspection with BLHP on 12/20/2010, inspector Robert Kawano requests to re-route existing conduits in the new light pole ftg. location at STN. 4+12.03. Utilities seem to be privately owned by 555 Mission St.. Please advise.

SUGGESTION:

ANSWER: **Accept Suggestion:** ☐

See RFI Response #U-0019.2

-
12/27/2010 E. Zagol

Unforeseen condition requiring improvements by property owner to relocate privately owned utilities in the City right of
way. TJPA Representative to coordinate with property owner to relocate utilities.

U-0019.2 **Light Pole at Station 4+12.03: Reroute existing conduit** **Closed** **12/21/2010** **12/31/2010** **02/02/2011** **Potentially** ☐

From: Webcor Construction LP Nhi Tran **To:** Turner Construction Compan Michelle Smith **Answered By:** Turner Construction Comp Michelle Smith

Co-Author:

REQUEST:

Question from RFI #U-0019.1

SUGGESTION:

ANSWER: **Accept Suggestion:** ☐

Electrical conduit has been relocated by 555 Mission

Number	Subject	Status	Date Created	Date Required	Date Answered	Cost Impact	Proceed

---
Reference: RFI #U-0019, attached picture and sheet U-3201

The streetlight at station 4+12.03 was laid out per the response to RFI #U-0019. When the new location was potholed, a number of existing utilities were discovered. Per inspection with BLHP on 12/20/2010, inspector Robert Kawano requests to re-route existing conduits in the new light pole ftg. location at STN. 4+12.03. Utilities seem to be privately owned by 555 Mission St.. Please advise.

St. property management. Webcor/Obayashi to relocate irrigation conduit to be out of the way of the light pole base location. Coordinate with 555 Mission (Julian Marsh 415-546-6036 or Rob Edlenbos 415-546-6037) to have the irrigation controllers shut off for the work.

RFI U-0019.1 Response - Eric Zagol - 12/27/2010

Unforeseen condition requiring improvements by property owner to relocate privately owned utilities in the City right of way. TJPA Representative to coordinate with property owner to relocate utilities.

U-0020 **Street Lighting Relocation Plan for Minna** **Closed** **11/15/2010** **11/29/2010** **11/18/2010** **Potentially** ☐

From: Webcor Construction LP Jeffrey Negley **To:** Turner Construction Compan Michelle Smith **Answered By:** AECOM Technical Servic Eric Zagol

Co-Author:

REQUEST:

Reference: Plan/Drawing Reference: U-3201

We have been informally advised that the Design Engineer and BLHP are considering a revised installation plan for the street lights on Minna. This would include the installation of temporary overhead power lines to feed the relocated street light poles, until such time as the new lights are powered from underground by Trinet.

Here is a sequence as Trinet understands it. Trinet would install the new light pole foundations on the north side of Minna and then relocate the light poles from the south side, per plans. BLHP would then install overhead cable, extending from a pole on 2nd St., to provide power for the lights. During installation of the new foundations, Trinet would install underground conduit from the pole to an adjacent splice box, and then later extend the underground conduit from the splice box to the PG&E power source, as depicted on the plans.

Please clarify the street lighting relocation plan currently under consideration. Also, if the BLHP plan to feed the

SUGGESTION:

ANSWER: **Accept Suggestion:** ☐

11/18/2010, per Eric Zagol;
At the request of the TJPA, SFPUC BLHP provided temporary overhead power for four street lights on Minna St. The temporary overhead power is shown in the attached sketch RFI-U0020 SKU-01. The temporary overhead street light power allows PG&E to de-activate existing underground electric ductbanks in Minna St. while maintaining power to the existing street lights.

The temporary overhead power to existing street lights can remain active until the two street light relocations in Minna Street are constructed, new underground street light duct, bull boxes and cables are constructed, and new underground power connections have been coordinated with SFPUC BLHP and PG&E.

Since SFPUC BLHP provided temporary power to the existing street lights, the construction sequence of the new street lights with respect to the other works on Minna St. now has more flexibility and is not required prior to performing other works in Minna St.

Number	Subject	Status	Date Created	Date Required	Date Answered	Cost Impact	Proceed

lights temporarily from overhead, will any changes be required to the foundation and light pole installation plan to accommodate an overhead power feed?

Please review and advise.

U-0021 **M.H. #501 and existing utilties** **Closed** **11/17/2010** **11/22/2010** **12/02/2010** **Potentially** ☐

From: Webcor Construction LP Jeffrey Negley **To:** Turner Construction Compan Michelle Smith **Answered By:** AECOM Technical Servic Eric Zagol

Co-Author:

REQUEST:

Reference Plan/Drawing: U-3021

During potholing activities in 1st St. where Manhole #501 is to be installed Trinet has encountered a number of existing utilities which occupy the same intended space for Manhole #501. Please see the attached sketch for locations and clarifications of these utilities.

Some of these utilities, particularly UT Group #2 and UT Group #5 (reference sketch) are intended to be disconnected by PG&E by November 24th. Please confirm.

UT Group #1, which appears to be owned by ATT is noted on the drawings as to be disconnected and demolished. Please advise as to when this utility is scheduled to be disconnected.

UT Groups #3 and #4 are unidentified and were not included in the USA markings for this area. In order to construct M.H. #501 per the contract drawings these utilities must be removed or relocated. Please advise as to the ownership of these utilities and provide direction on how to proceed.

Note: due to construction, we are requesting that this RFI be answered by 11/22/10 if possible.

SUGGESTION:

ANSWER: **Accept Suggestion:** ☐

Please provide a mark up of U-3021 indicating the horizontal location of the utilities discovered that correlate to the section sketch provided. Also, please clearly indicate those utilities that were not marked in the field in response to the USA ticket for this excavation work.

****

E. Zagol 11/24/10

In response to items listed above:

1. As of 11/17/10 PG&E has stated that the de-energization of Minna St. will be complete by 11/24/10. In accordance with Specification 024100 1.3 B and 024100 3.5 B obtain in writing a Utility Severance Certificate (or equal) that all connections have been disconnected and the utility is not active.

2. As of 11/17/10 AT&T has stated that contents in AT&T existing ducts along First St. have been terminated with the exception of the new duct from Howard St. to 400 Howard St. property. Confirm that the existing AT&T duct subject of discursion is the the exiting duct from TMH-1887 to Existing Transbay Terminal as shown to be demolished on U-1121. In accordance with Specification 024100 1.3 B and 024100 3.5 B obtain in writing a Utility Severance Certificate (or equal) that all connections have been

Number	Subject	Status	Date Created	Date Required	Date Answered	Cost Impact	Proceed

disconnected and the utility is not active.

3. Groups #3 and #4 utilities are not shown on AECOM's existing utility plans and as noted in the RFI are not included in the USA markings. Pending direction from TJPA's representative in accordance with Specification Section 00 08 10 the suggested first course of action is to notify USA and request a "No Response Follow Up Message". Other suggested actions have been provided to TJPA PMPC for consideration and direction further direction provided by the TJPA's Representative.

****

E. Zagol 11/26/10

RE item #1, See attached email and email attachment from Antonio Chan (PG&E) dated 11/24/10 confirming de-energization of electric ducts in Minna St. and First St.

U-0022 **SFWD crossings at Minna St. and 1st** **Closed** **11/17/2010** **12/01/2010** **12/03/2010** **Potentially** ☐

From: Webcor Construction LP Jeffrey Negley **To:** Turner Construction Compan Michelle Smith **Answered By:** AECOM Technical Servic Eric Zagol

Co-Author:

REQUEST:

Reference Plan/Drawing: U-1002 and attached PDF.

Current USA markings have identified (2) SFWD laterals which are not indicated on the drawings. These are located at approximately STA 8+59 and 9+06 and extend from the main in Minna St., North toward the building of 100 1st. ST. These laterals need to be identified and recorded in order to properly document and construct both the new water line and the new joint trench.

Any additional work associated with these utilities may result in a cost or schedule impact. Please review and provide direction on how we should proceed.

SUGGESTION:

ANSWER: **Accept Suggestion:** ☐

100 First St. Building Engineer confirmed existing laterals do not provide service to 100 First St.

After new water in Minna Street is constructed, water services and hydrant laterals are connected; main to main connections are made by CDD , and pipes are secure; and the existing water main is abandoned, demolish existing laterals identified at approx. STA 8+59 and 9+06.

DO NOT provide a connection from new water main to existng laterals at approx. STA 8+59 and 9+06.

Webcor/Obayashi Joint Venture

PROJECT MANAGEMENT - REQUEST AND ANSWERS LOG

30100 - Transbay Transit Center Project

Number	Subject	Status	Date Created	Date Required	Date Answered	Cost Impact	Proceed

****

Tap record and meter information provided by SFPUC Customer Service Bureau indicates two water laterals to the 100 First St. property entering the building from First Street approximately 50 feet south of Mission St. Meter boxes located along First St. west sidewalk.

Coordinate with the 100 First St. Building Maintenance, Bradford J. Collins (CAC Real Estate Management Co., Inc.), Tel: 415.243.8803 thru the TJPA's representative to confirm that laterals do not provide service to 100 First St. property from Minna Street.

U-0023 **MOP 1 for de-energizing PG&E at Minna St. between 1st and 2nd St** **Closed** **12/01/2010** **12/02/2010** **12/02/2010** **Potentially** ☐

From: Webcor Construction LP Jeffrey Negley **To:** Turner Construction Compan Michelle Smith **Answered By:** Turner Construction Comp Michelle Smith

Co-Author:

REQUEST:

There is a live PG&E cable in conduit (see RFI U-0021) in First Street at intersection of Minna Street.

Per spec section 01.01.42 / AT2-1 MOP for the Utility Shutdown Template, MOP 1 was created and sent via email on 11/29/10 requesting signatures from TJPA and PG&E for verificaiton the conduit is de-energized. Copy enclosed.

Also per spec section 02 41 00-3 (Vol. 20 Contract # CMCG 08-04 Existing Utilities)
Item A - "Coordinate the shut off or disconnect of existing utilities affecting demolition work with the utility owner at least (7) seven calendar days prior to commencing with the work. The TJPA Representative will coordinate with the utility owner to open/close valves on piping, perform piping disconnects required and perform electric and telecommunication disconnects required. Do not proceed with this phase of work before getting the approval from the TJPA Representative".

SUGGESTION:

ANSWER: **Accept Suggestion:** ☐

Please see attached document. This will be the MOP Form that W/O and its subcontractors are to use for the duration of the project for the deenergization, disconnect, or demolition of any utilities.

Number	Subject	Status	Date Created	Date Required	Date Answered	Cost Impact	Proceed

Please provide approval.

In addition, per item B of spec section 02 41 00-3, "Prior to removal of any non-governmental (privately owned) ductbank, conduit or gas lines, obtain in writing a Utility Severance Certificate that all connections have been disconnected and the utility is not active".

Please provide a Utility Severance Certificate per item B above.

Sewer work on First Street is scheduled to start 12/1/10. Work cannot proceed until the conduit is de-energized.

Thank you.

U-0024 **EBI demo dwgs and schedule for coordination** **Closed** **12/02/2010** **12/03/2010** **12/08/2010** **Potentially** ☐

From: Webcor Construction LP Jeffrey Negley **To:** Turner Construction Compan Michelle Smith **Answered By:** Turner Construction Comp Michelle Smith

Co-Author:

REQUEST:

Due to ongoing demolition work by EBI, W/O is requesting formal transmission of the most current demolition drawings and schedule.

These documents will be used for coordination efforts with the RUP subcontractors.

Please forward to W/O as soon as possible.

Thank you.

SUGGESTION:

ANSWER: **Accept Suggestion:** ☐

Per our utilities working session yesterday (12/7/10), the demolition drawings being used are the original set issued for construction, dated 1/14/10. C. Traylor will follow up to find out if/when Webcor/Obayashi was issued a copy of this set, or issue a new one for your records. The following supplemental documents have been issued since this set:

- BSE drawing package - issued to W/O as Field Order #002 by TJPA (not attached to this RFI)

- Demolition Sequence drawings and manual - (copies attached to this RFI)

Webcor/Obayashi Joint Venture

PROJECT MANAGEMENT - REQUEST AND ANSWERS LOG

30100 - Transbay Transit Center Project

Number	Subject	Status	Date Created	Date Required	Date Answered	Cost Impact	Proceed
U-0025	**Capped 6" Water Main in First St Investigative Trench at Minna St.**	**Closed**	**12/03/2010**	**12/06/2010**	**12/08/2010**	**Potentially**	☐

From: Webcor Construction LP David Hungerford **To:** Turner Construction Compan Michelle Smith **Answered By:** AECOM Technical Servic Eric Zagol

Co-Author:

REQUEST:

Reference: Sheet U-1002 (dated 2010-10-01 - RUP Field Order), and attached sketch

Trinet has encountered a capped 6" water main running along the center of the First St. investigative trench at the east end of Minna St. - see attached sketch . Please confirm if the line is active or dead. We cannot excavate this section of trench to the required 8' depth until this water line is removed.

SUGGESTION:

ANSWER: **Accept Suggestion:** ☐

Contact USA and request SFWD (or SFPUC CDD) contact information.

Contact SFWD (or SFPUC CDD) and request field visit to determine status (active or abandoned) of existing capped 6" water pipe.

U-0026	**Unidentified Facility in First St Invest Trench - 21'-7 from Curb**	**Closed**	**12/03/2010**	**12/06/2010**	**12/09/2010**	**Potentially**	☐

From: Webcor Construction LP David Hungerford **To:** Turner Construction Compan Michelle Smith **Answered By:** AECOM Technical Servic Eric Zagol

Co-Author:

REQUEST:

Reference: Sheet U-1002 (dated 2010-10-01 - RUP Field Order)

See attached plan and section through the investigative trench on the east side of First St.. During Trinet's investigation, an unidentified utility/facility was encountered in the trench. Please identify the highlighted utility, located 21'-7" from face of curb, on the attachment and advise if it needs to be cut and capped.

SUGGESTION:

ANSWER: **Accept Suggestion:** ☐

Verizon (MFS and MCI) conduits appear to be labeled in section however unknown conduits are indicated either directly below or adjacent to the identified Verizon conduits. How were the Verizon conduits (MFS and MCI) identified? Did Verizon confirm those labeled as Verizon (MCI and MFS) are theirs and the others are unknown? Please clarify. As per Demolition Plans, protect Verizon (MFS and MCI) structures in place until temporary bridge is constructed and Verizon conduits are relocated.

U-0027	**Unidentified Facility in First St Invest Trench - 18'-7 from Curb**	**Closed**	**12/03/2010**	**12/06/2010**	**12/07/2010**	**Potentially**	☐

From: Webcor Construction LP David Hungerford **To:** Turner Construction Compan Michelle Smith **Answered By:** AECOM Technical Servic Eric Zagol

Co-Author:

REQUEST:

Reference: Sheet U-1002 (dated 2010-10-01 - RUP Field Order)

See attached plan and section through the investigative trench on the east side of First St.. During Trinet's investigation, an unidentified utility/facility was encountered in the trench. Please identify the highlighted utility, located 18'-7" from face of curb, on the attachment

SUGGESTION:

ANSWER: **Accept Suggestion:** ☐

- Confirm the "unidentified" utility was not marked by a utility in response to USA ticket.

- Confirm that USA No Response Follow-Up procedures (First, Second and Third No Response Follow-Up) were followed in an effort to identify the utility including notifying utilities. Investigation information provided appears to be consistent with

Number	Subject	Status	Date Created	Date Required	Date Answered	Cost Impact	Proceed

and advise if it needs to be cut and capped.

plans indicating a PG&E utility.

- Confirm PG&E was contacted via USA process to mark underground facilities.

U-0028 **Unidentified Facility in First St Invest Trench - 14'-7 from Curb** **Closed** **12/03/2010** **12/06/2010** **12/07/2010** **Potentially** ☐

From: Webcor Construction LP David Hungerford **To:** Turner Construction Compan Michelle Smith **Answered By:** AECOM Technical Servic Eric Zagol

Co-Author:

REQUEST:

Reference: Sheet U-1002 (dated 2010-10-01 - RUP Field Order)

See attached plan and section through the investigative trench on the east side of First St.. During Trinet's investigation, an unidentified utility/facility was encountered in the trench. Please identify the highlighted utility, located 14'-7" from face of curb, on the attachment and advise if it needs to be cut and capped.

SUGGESTION:

ANSWER: **Accept Suggestion:** ☐

- Confirm the "unidentified" utility was not marked by the utility in response to USA ticket.

- Confirm that USA No Response Follow-Up procedures (First, Second and Third No Response Follow-Up) were followed in an effort to identify the utility including notifying utilities. Investigation information provided appears to be consistent with plans indicating a PG&E utility.

- Confirm PG&E was contacted via USA process to mark underground facilities.

U-0029 **Unidentified Facility in First St Invest Trench - 13'-4" from Curb** **Closed** **12/03/2010** **12/06/2010** **12/07/2010** **Potentially** ☐

From: Webcor Construction LP David Hungerford **To:** Turner Construction Compan Michelle Smith **Answered By:** AECOM Technical Servic Eric Zagol

Co-Author:

REQUEST:

Reference: Sheet U-1002 (dated 2010-10-01 - RUP Field Order)

See attached plan and section through the investigative trench on the east side of First St.. During Trinet's investigation, an unidentified utility/facility was encountered in the trench. Please identify the highlighted utility, located 13'-4" from face of curb, on the attachment and advise if it needs to be cut and capped.

SUGGESTION:

ANSWER: **Accept Suggestion:** ☐

- Confirm the "unidentified" utility was not marked by the utility in response to USA ticket.

- Confirm that USA follow up procedures were followed in an effort to identify the utility including notifying utilities with no response.

Webcor/Obayashi Joint Venture

PROJECT MANAGEMENT - REQUEST AND ANSWERS LOG

30100 - Transbay Transit Center Project

Number	Subject	Status	Date Created	Date Required	Date Answered	Cost Impact	Proceed
U-0030	**Unidentified Facility in First St Invest Trench - 9'-10" from Curb**	**Closed**	**12/03/2010**	**12/06/2010**	**12/10/2010**	**Potentially**	☐

From: Webcor Construction LP David Hungerford **To:** Turner Construction Compan Michelle Smith **Answered By:** AECOM Technical Servic Eric Zagol

Co-Author:

REQUEST:

Reference: Sheet U-1002 (dated 2010-10-01 - RUP Field Order)

See attached plan and section through the investigative trench on the east side of First St.. During Trinet's investigation, an unidentified utility/facility was encountered in the trench. Please identify the highlighted utility, located 9'-10" from face of curb, on the attachment and advise if it needs to be cut and capped.

SUGGESTION:

ANSWER: **Accept Suggestion:** ☐

Verizon (MFS and MCI) conduits appear to be labeled in section however unknown conduits are indicated either directly below or adjacent to the identified Verizon conduits. How were the Verizon conduits (MFS and MCI) identified? Did Verizon confirm those labeled as Verizon (MCI and MFS) are theirs and the others are unknown? Please clarify. As per Demolition Plans, protect Verizon (MFS and MCI) structures in place until temporary bridge is constructed and Verizon conduits are relocated.

U-0031	**Unidentified Facility in First St Invest Trench - 7'-2" from Curb**	**Closed**	**12/03/2010**	**12/06/2010**	**12/07/2010**	**Potentially**	☐

From: Webcor Construction LP David Hungerford **To:** Turner Construction Compan Michelle Smith **Answered By:** AECOM Technical Servic Eric Zagol

Co-Author:

REQUEST:

Reference: Sheet U-1002 (dated 2010-10-01 - RUP Field Order)

See attached plan and section through the investigative trench on the east side of First St.. During Trinet's investigation, an unidentified utility/facility was encountered in the trench. Please identify the highlighted utility, located 7'-2" from face of curb, on the attachment and advise if it needs to be cut and capped.

SUGGESTION:

ANSWER: **Accept Suggestion:** ☐

- RFI states "unidentified" utility yet highlighted utility in New Section 1 states "10 AWSS", please clarify question.

U-0031.1	**24in Concrete Wall in First St. Invest Trench - 7ft 2in from FOC**	**Closed**	**12/23/2010**	**01/02/2011**	**12/29/2010**	**Potentially**	☐

From: Webcor Construction LP David Hungerford **To:** Turner Construction Compan Kevin Chiu **Answered By:** AECOM Technical Servic Eric Zagol

Co-Author:

REQUEST:

Reference: Sheet U-1007, attached section and plan sketches, and attached documentation of notifications to USA North

See the highlighted wall on attached plan and section through the investigative trench on the East side of First St.from Stn. 10+00 to 9+70. Per note 4 on sheet U-1007 Trinet requests direction regarding the unidentified 24"

SUGGESTION:

ANSWER: **Accept Suggestion:** ☐

Unknown 24" concrete wall to be demolished by Transit Center Project (NIP) within the area impacted by the CDSM shoring wall and mass excavation.

Answered by Eric Zagol
AECOM 12/29/2010

Number	Subject	Status	Date Created	Date Required	Date Answered	Cost Impact	Proceed

concrete wall found 7'-2" from the East face of curb and 10" cover that was encountered but not indicated on the contract plans.

Trinet has this plated but would like to backfill the trench as soon as possible. An expedited response is requested with official direction on how to proceed with this wall by 12/27/10.

U-0032 **Unidentified Facility in First St Invest Trench - 3'-2" from Curb** **Closed** **12/03/2010** **12/06/2010** **12/07/2010** **Potentially** ☐

From: Webcor Construction LP David Hungerford **To:** Turner Construction Compan Michelle Smith **Answered By:** AECOM Technical Servic Eric Zagol

Co-Author:

REQUEST:

Reference: Sheet U-1002 (dated 2010-10-01 - RUP Field Order)

See attached plan and section through the investigative trench on the east side of First St.. During Trinet's investigation, an unidentified utility/facility was encountered in the trench. Please identify the highlighted utility, located 3'-2" from face of curb, on the attachment and advise if it needs to be cut and capped.

SUGGESTION:

ANSWER: **Accept Suggestion:** ☐

- Confirm the "unidentified" utility was not marked by a utility in response to USA ticket.

- Confirm that USA No Response Follow-Up procedures (First, Second and Third No Response Follow-Up) were followed in an effort to identify the utility including notifying utilities. Investigation information provided appears to be consistent with plans indicating a AT&Y utility at this location.

- Confirm AT&T was contacted via USA process to mark underground facilities.

U-0032.1 **Unidentified 18" Concrete Wall in First St Invest Trench - 3ft-2in from Curb** **Closed** **12/23/2010** **01/02/2011** **12/29/2010** **Potentially** ☐

From: Webcor Construction LP David Hungerford **To:** Turner Construction Compan Kevin Chiu **Answered By:** AECOM Technical Servic Eric Zagol

Co-Author:

REQUEST:

Reference: Sheet U-1007, attached section and plan sketches, and attached documentation of notifications to USA North

See the highlighted item on attached plan and section through the investigative trench on the East side of First

SUGGESTION:

ANSWER: **Accept Suggestion:** ☐

Unknown 18" concrete wall to be demolished by Transit Center Project (NIP) within the area impacted by the CDSM shoring wall and mass excavation.

Answered by Eric Zagol
AECOM 12/29/2010

Number	Subject	Status	Date Created	Date Required	Date Answered	Cost Impact	Proceed

St.from Station 10+00 to 9+70. Per note 4 on sheet U-1007, Trinet requests direction for the demolition of the 18" concrete wall found 3'-2" from the East face of curb and 17.5" covered that was encountered but not indicated on the contract plans.

Trinet has this plated but would like to backfill the trench as soon as possible. An expedited response is requested with official direction on how to proceed with this facility by 12/27/10.

U-0033 **Unidentified Facility in First St Invest Trench - 5'-8" from Curb** **Closed** **12/03/2010** **12/06/2010** **12/07/2010** **Potentially** ☐

From: Webcor Construction LP David Hungerford **To:** Turner Construction Compan Michelle Smith **Answered By:** AECOM Technical Servic Eric Zagol

Co-Author:

REQUEST:

Reference: Sheet U-1002 (dated 2010-10-01 - RUP Field Order)

See attached plan and section through the investigative trench on First St. at Minna St.. During Trinet's investigation, an unidentified utility/facility was encountered in the trench. Please identify the highlighted utility, located 5'-8" from face of curb, on the attachment and advise if it needs to be cut and capped.

SUGGESTION:

ANSWER: **Accept Suggestion:** ☐

- Confirm the "unidentified" utility was not marked by the utility in response to USA ticket.

- Confirm that USA No Response Follow-Up procedures (First, Second and Third No Response Follow-Up) were followed in an effort to identify the utility including notifying utilities. Investigation information provided appears to be consistent with plans indicating traffic signal utility.

- Confirm SFMTA was contacted via USA process to mark traffic signals and street light underground facilities.

U-0033.1 **Unidentified 2in Pipe in First St Invest Trench - 5ft-8in from Curb** **Closed** **12/23/2010** **01/02/2011** **12/29/2010** **Potentially** ☐

From: Webcor Construction LP David Hungerford **To:** Turner Construction Compan Kevin Chiu **Answered By:** AECOM Technical Servic Eric Zagol

Co-Author:

REQUEST:

Reference: Sheet U-1007, attached section and plan sketches, and attached documentation of notifications to USA North

SUGGESTION:

ANSWER: **Accept Suggestion:** ☐

Confirm exposed 2" pipe is Traffic Signal conduit as shown in the Plans. Once confirmed demolish in accordance with Demolition Plans.

Number	Subject	Status	Date Created	Date Required	Date Answered	Cost Impact	Proceed

See attached plan and section through the investigative trench on the East side of First St.from Station 10+00 to 9+70. Per note 4 on sheet U-1007, Trinet requests direction for demolition of the unidentified 2" pipe found 5'-8" from the East face of curb and 15" covered that was encountered but not indicated on the contract plans.

Trinet has this plated but would like to backfill the trench as soon as possible. An expedited response is requested with official direction on how to proceed with this facility by 12/27/10.

Answered by Eric Zagol
AECOM 12/29/2010

U-0034 **Station 9+10 New Hydrant Conflict with Sidewalk Basement** **Closed** **12/09/2010** **12/20/2010** **12/13/2010** **Potentially** ☐

From: Webcor Construction LP David Hungerford **To:** Turner Construction Compan Kevin Chiu **Answered By:** AECOM Technical Servic Eric Zagol

Co-Author:

REQUEST:

Reference: Sheet U-3109 (dated 2010-09-29)

During Trinet's potholing for the Joint trench along the North side of Minna St, a basemenet for building "100 First St." was revealed. The basement wall is located just behind the face of curb and extends to more than 8 feet below finish grade. The extent of the basement is unknown, but assumed to run the length of the "100 First St" property. The basement structure is in conflict with the proposed new fire hydrant installation at Station 9+10.

Please provide layout for the fire hydrant.

SUGGESTION:

ANSWER: **Accept Suggestion:** ☐

The wall encountered appears to be an abandoned side walk basement wall for the 4 story brick building that existed prior to the current 100 First St. building. Approximate width of wall is 2 feet and the outside face is approximately at the face of curb. Neatly cut and remove wall to form a trench. Required trench width and depth per Detail 7 on U-5101. Construct hydrant lateral, riser and hydrant as shown in Detail 2 on Sheet U-5101.

U-0035 **Installlation Depth of Storm Drain New Catch Basins** **Closed** **12/09/2010** **12/13/2010** **12/13/2010** **Potentially** ☐

From: Webcor Construction LP David Hungerford **To:** Turner Construction Compan Kevin Chiu **Answered By:** AECOM Technical Servic Eric Zagol

Co-Author:

REQUEST:

Reference: Sheet U-3023, U-3033 (Detail B), Attached detail from Department of Public Works Buearu of Engineering

SUGGESTION:

ANSWER: **Accept Suggestion:** ☐

AECOM has confirmed with SFDPW Hydraulics that limited vertical bends in the 10-inch culvert run are acceptable. SFDPW also confirmed that from a maintenance perspective the clean out on the cast

Number	Subject	Status	Date Created	Date Required	Date Answered	Cost Impact	Proceed

Trinet is concerned that the installation depth for many of the new catch basin does not comply with SFDPW Sewer Departent guidelines, specifically regarding access to the traps for the maintenance department. The DPW sewer maintenence crews need to have ready access to the p-trap during flooding emergencies. DPW crews need to be able
to reach the p-trap to, either remove the cleanout cap and release the flow to the culvert pipe (if the trap bottom is plugged), or rod the culvert line through the trap (if the culvert is plugged). To get some clarification of the installation
guidelines, Trinet had informally talked to one of the design engineers at the SF Bureau of Engineerring, Hydraulics
Department. He advised Trinet that new catch basins should be installed with center of trap and discharge piping grade located between 3 and 4 feet below the culvert runs to cross under existing utilities that are in conflict with a direct run to the discharge manhole. Bends should be 22 1/2 degrees where possible as required, and if 45 degree bends must be used we should limit the number to two (2).

Please provide the depth of CB#603 on Freemont Street. To expedite the work in the field, we require an answer by 12/13/10.

iron trap is more accessible at a depth of 3 to 4 feet below ground surface.

Please submit subsurface utility investigation information including top, bottom and size of existing utilities along the 10-inch culvert alignment from catch basin to manhole such that the 10-inch culvert can be engineered and the catch basin depth can be determined to avoid existing and future utilities.

U-0035.1 **Fremont Street Storm Drain from CB#603 to (E) Manhole** **Closed** **12/23/2010** **01/02/2011** **12/28/2010** **Potentially** ☐

From: Webcor Construction LP Jason Dunne **To:** Turner Construction Compan Kevin Chiu **Answered By:** AECOM Technical Servic Eric Zagol

Co-Author:

REQUEST:

Refer to Sheet U-3023, U-3033 (detail B) and see RFI #U-0035

Per the response to RFI #U-0035, find attached for your review a drawing showing the proposed alignment for the catch basin (CB# 603) installation and storm drain run to the existing manhole on Fremont St.

Please confirm this proposed alignment is acceptable or provide another solution.

SUGGESTION:

ANSWER: **Accept Suggestion:** ☐

Based on a site visit on 12/28/10 with Jason Dunne (W/O) and Victor (Trinet) to review exposed trench alignment for 10-inch culvert it was confirmed that the culvert alignment will clear the new temporary 8-inch water and existing 8-inch water main with adequate separation.

Alignment as shown in the attached drawing is acceptable.

Number	Subject	Status	Date Created	Date Required	Date Answered	Cost Impact	Proceed

***Please confirm this alignment by 12/27/10 if possible.

Note, existing 3" HP Gas immediately west of the catch basin is to be abandoned by PG&E per Sheet U-1123 Demolition and Sequence item 2. Coordinate with PG&E to confirm 3" HP Gas is inactive and can be demolished and removed to facilitate construction of the catch basin and
culvert, if required.

Answered by Eric Zagol
AECOM 12/28/2010

****
****
****

Please indicate the location of new temporary 8-inch water main in Fremont Street in the section drawing and resubmit for review.

Answered by Eric Zagol
AECOM 12/27/2010

U-0036 **Unidentified 6in Pipe Encountered in Fremont St. - 7ft-9in from FOC** **Closed** **12/15/2010** **12/25/2010** **12/30/2010** **Potentially** ☐

From: Webcor Construction LP David Hungerford **To:** Turner Construction Compan Kevin Chiu **Answered By:** AECOM Technical Service Eric Zagol

Co-Author:

REQUEST:

Reference: Sheet U-1008, attached sketch of section from Trinet RFI 28 and documentation of notifications to USA North

See the attached section through the investigative trench at station 4+40 on Fremont St. Per note 4 on sheet U-1008, Trinet hereby requests that Webcor "notify TJPA" of the unidentified 6" steel pipe at 7'-9" from the east face of curb and 3'-4" to cover that Trinet encountered in their trenching which was not indicated on the contract plan. Per the same note, Trinet requests "direction on the demolition" of this line.

Trinet has this plated but would like to backfill the trench as soon as possible. An expedited response is requested

SUGGESTION:

ANSWER: **Accept Suggestion:** ☐

Unknown unforeseen existing utility condition.

In accordance with specification 00 08 10 section 1.3 EXISTING UTILITIES NOT INDICATED and specification 020630 section 4.1 POTHOLING AND TRENCHING OPERATIONS paragraph C, please proceed with the following in order to identify all interfering utilities that are unknown after all specified procedures or other non destructive methods proposed by the contractor have been exhausted:

Pipe: If conductive material, perform subsurface investigation via electromagnetic detection (or other nondestructive methods) to trace utility back to nearest vault, pull box, manhole or valve to identify

Number	Subject	Status	Date Created	Date Required	Date Answered	Cost Impact	Proceed

with official direction on how to proceed with this facility by 12/16/10.

owner and content. If nonconductive, excavate along pipe alignment to expose coating and a joint. Inspect and provide information on coating and joint type. If content is still unknown, tap each line in order to identify contents and operating status of utility (i.e. abandoned or operational.)

Conduit and duct bank: Determine if utility is a charged electric utility utilizing a contractor that performs NETA type work. Determine if telecommunication cables are operational.

Once the utility has been identified including owner and contents, and determined inactive or de-energized, cut and cap utility at the demolition demarcation line shown in the drawings.

Note, 6" steel pipe is in the same alignment as PG&E's excavated manhole 1675. Coordinate with PG&E to see if PG&E has demolished this line.

U-0037 **Unidentified 2in Facility Encountered in Minna St. - 7in from FOC** **Closed** **12/15/2010** **12/25/2010** **12/30/2010** **Potentially** ☐

From: Webcor Construction LP David Hungerford **To:** Turner Construction Compan Kevin Chiu **Answered By:** AECOM Technical Servic Eric Zagol

Co-Author:

REQUEST:

Reference: Sheet U-1007, attached sketch of section from Trinet RFI 16 and Documentation of notification to USA North

See the attached section through the investigative trench at station 2 + 29.68 on Minna St. Per note 4 on sheet U - 1007, Trinet "hereby requests that Webcor "notify TJPA" of the unidentified 2" steel line found 7" from south face of curb and 2'-2" to cover. Per the same note, Trinet requests "direction on the demolition" of this line.

Trinet has this plated but would like to backfill the trench as soon as possible. An expedited response is requested with official direction on how to proceed with this facility by

SUGGESTION:

ANSWER: **Accept Suggestion:** ☐

Unknown unforeseen existing utility condition.

In accordance with specification 00 08 10 section 1.3 EXISTING UTILITIES NOT INDICATED and specification 020630 section 4.1 POTHOLING AND TRENCHING OPERATIONS paragraph C, please proceed with the following in order to identify all interfering utilities that are unknown after all specified procedures or other non destructive methods proposed by the contractor have been exhausted:

Pipe: If conductive material, perform subsurface investigation via electromagnetic detection (or other nondestructive methods) to trace utility back to

Number	Subject	Status	Date Created	Date Required	Date Answered	Cost Impact	Proceed

12/16/10.

nearest vault, pull box, manhole or valve to identify owner and content. If nonconductive, excavate along pipe alignment to expose coating and a joint. Inspect and provide information on coating and joint type. If content is still unknown, tap each line in order to identify contents and operating status of utility (i.e. abandoned or operational.)

Conduit and duct bank: Determine if utility is a charged electric utility utilizing a contractor that performs NETA type work. Determine if telecommunication cables are operational.

Once the utility has been identified including owner and contents, and determined inactive or de-energized, cut and cap utility at the demolition demarcation line shown in the drawings.

U-0038 **Unidentified 4" Facility Encountered in Minna St. - 7ft 4in from FOC** **Closed** **12/15/2010** **12/25/2010** **12/16/2010** **Potentially** ☐

From: Webcor Construction LP David Hungerford **To:** Turner Construction Compan Kevin Chiu **Answered By:** AECOM Technical Servic Eric Zagol

Co-Author:

REQUEST:

Reference: Sheet U-1007, attached sketch of section from Trinet RFI 17 and documentation of notifications to USA North

See the attached section through the investigative trench at station 2 + 29.68 on Minna St. Per note 4 on sheet U - 1007, Trinet "hereby requests that Webcor "notify TJPA" of the unidentified 4" steel line found 7'-4" from north face of curb and 2'-11" to cover. Per the same note, Trinet requests "direction on the demolition" of this line.

Trinet has this plated but would like to backfill the trench as soon as possible. An expedited response is requested with official direction on how to proceed with this facility by 12/16/10.

SUGGESTION:

ANSWER: **Accept Suggestion:** ☐

Confirmed that the existing 4" steel line is an abandoned PG&E conduit connected to the abandoned PG&E manhole 1354 abandoned and de-energized as part of PG&E's Minna Street Stage I de-energization work. Demolish and remove conduit and contents following confirmation of abandonment by PG&E.

Webcor/Obayashi Joint Venture

PROJECT MANAGEMENT - REQUEST AND ANSWERS LOG

30100 - Transbay Transit Center Project

Number	Subject	Status	Date Created	Date Required	Date Answered	Cost Impact	Proceed
U-0039	Unidentified 4" Facility Encountered in Minna St. - 6ft 7in from FOC	Closed	12/15/2010	12/25/2010	12/16/2010	Potentially	☐

From: Webcor Construction LP David Hungerford **To:** Turner Construction Compan Kevin Chiu **Answered By:** AECOM Technical Servic Eric Zagol

Co-Author:

REQUEST:

Reference: Sheet U-1007, attached sketch of section from Trinet RFI 18 and documentation of notifications to USA North

See the attached section through the investigative trench at station 2 + 29.68 on Minna St. Per note 4 on sheet U - 1007, Trinet "hereby requests that Webcor "notify TJPA" of the unidentified 4" steel line found 6'-7" from north face of curb and 2'-3" to cover. Per the same note, Trinet requests "direction on the demolition" of this line.

Trinet has this plated but would like to backfill the trench as soon as possible. An expedited response is requested with official direction on how to proceed with this facility by 12/16/10.

SUGGESTION:

ANSWER: **Accept Suggestion:** ☐

Confirm that the existing 4" steel line is an abandoned PG&E conduit connected to the abandoned PG&E manhole 1354 abandoned and de-energized as part of PG&E's Minna Street Stage I de-energization work. Demolish and remove conduit and contents following confirmation of abandonment by PG&E.

U-0040	Unidentified 4in Facility Encountered in Minna St. - 5ft from FOC	Closed	12/15/2010	12/25/2010	12/16/2010	Potentially	☐

From: Webcor Construction LP David Hungerford **To:** Turner Construction Compan Kevin Chiu **Answered By:** AECOM Technical Servic Eric Zagol

Co-Author:

REQUEST:

Reference: Sheet U-1007, attached sketch of section from Trinet RFI 19 and documentation of notifications to USA North

See the attached section through the investigative trench at station 2 + 29.68 on Minna St. Per note 4 on sheet U-1007, Trinet "hereby requests that Webcor "notify TJPA" of the unidentified 4" steel line found 5' from north face of curb and 2'-10" to cover. Per the same note, Trinet requests "direction on the demolition" of this line.

Trinet has this plated but would like to backfill the trench as soon as possible. An expedited response is requested with official direction on how to proceed with this facility by 12/16/10.

SUGGESTION:

ANSWER: **Accept Suggestion:** ☐

Existing 4" steel conduit is directly in line with abandoned PG&E manhole 1354. Confirm that the existing 4" steel is an abandoned PG&E conduit connected to the abandoned PG&E manhole 1354 abandoned and de-energized as part of PG&E's Minna Street Stage I de-energization work. Demolish and remove conduit and contents following confirmation of abandonment by PG&E.

U-0041	Unidentified 1in Facility Encountered in Minna St. - 2ft 9in from FOC	Closed	12/15/2010	12/25/2010	12/30/2010	Potentially	☐

From: Webcor Construction LP David Hungerford **To:** Turner Construction Compan Kevin Chiu **Answered By:** AECOM Technical Servic Eric Zagol

Number	Subject	Status	Date Created	Date Required	Date Answered	Cost Impact	Proceed

Co-Author:

REQUEST:

Reference: Sheet U-1007, attached sketch of section from Trinet RFI 20 and documentation of notifications to USA North

See the attached section through the investigative trench at station 2 + 29.68 on Minna St. Per note 4 on sheet U-1007, Trinet "hereby requests that Webcor "notify TJPA" of the unidentified 1" steel line found 2' 9" from north face of curb and 18" to cover. Per the same note, Trinet requests "direction on the demolition" of this line.

Trinet has this plated but would like to backfill the trench as soon as possible. An expedited response is requested with official direction on how to proceed with this facility by 12/16/10.

SUGGESTION:

ANSWER: **Accept Suggestion:** ☐

Unknown unforeseen existing utility condition.

In accordance with specification 00 08 10 section 1.3 EXISTING UTILITIES NOT INDICATED and specification 020630 section 4.1 POTHOLING AND TRENCHING OPERATIONS paragraph C, please proceed with the following in order to identify all interfering utilities that are unknown after all specified procedures or other non destructive methods proposed by the contractor have been exhausted:

Pipe: If conductive material, perform subsurface investigation via electromagnetic detection (or other nondestructive methods) to trace utility back to nearest vault, pull box, manhole or valve to identify owner and content. If nonconductive, excavate along pipe alignment to expose coating and a joint. Inspect and provide information on coating and joint type. If content is still unknown, tap each line in order to identify contents and operating status of utility (i.e. abandoned or operational.)

Conduit and duct bank: Determine if utility is a charged electric utility utilizing a contractor that performs NETA type work. Determine if telecommunication cables are operational.

Once the utility has been identified including owner and contents, and determined inactive or de-energized, cut and cap utility at the demolition demarcation line shown in the drawings.

Number	Subject	Status	Date Created	Date Required	Date Answered	Cost Impact	Proceed
U-0042	**Unidentified 6in Facility Encountered in Minna St. - 6in from FOC**	**Closed**	**12/15/2010**	**12/25/2010**	**12/16/2010**	**Potentially**	☐

From: Webcor Construction LP David Hungerford **To:** Turner Construction Compan Kevin Chiu **Answered By:** AECOM Technical Servic Eric Zagol

Co-Author:

REQUEST:

Reference: Sheet U-1007, attached sketch of section from Trinet RFI 21 and documentation of notifications to USA North

SUGGESTION:

ANSWER: **Accept Suggestion:** ☐

Confirm with PG&E that the 6" steel line identified is an abandoned PG&E 6" cast iron gas main. Demolish abaondoned 6" cast iron pipe and contents as

Number	Subject	Status	Date Created	Date Required	Date Answered	Cost Impact	Proceed

See the attached section through the investigative trench at station 2 + 29.68 on Minna St. Per note 4 on sheet U-1007, Trinet "hereby requests that Webcor "notify TJPA" of the unidentified 6" steel line found 6" from north face of curb and 36" to cover. Per the same note, Trinet requests "direction on the demolition" of this line.

Trinet has this plated but would like to backfill the trench as soon as possible. An expedited response is requested with official direction on how to proceed with this facility by 12/16/10.

required to construct the Joint Trench.

U-0043 **Fire Hydrant at St. 5+70 on Minna** **Closed** **12/13/2010** **12/23/2010** **12/14/2010** **Potentially** ☐

From: Webcor Construction LP Mario Saldana Sr. **To:** Turner Construction Compan Kevin Chiu **Answered By:** AECOM Technical Servic Eric Zagol

Co-Author:

REQUEST:

INFORMATION NEEDED
See the attached picture of the proposed fire hydrant location as indicated by drawings on Minna St. at Stn. 5+70. This location is in conflict with an existing driveway apron not shown on drawing #
U-2008. Eric Zagol from AECOM is aware and has seen this issue in the field. NOTE - Due to the 8" water line currently being installed, the location for the "T" section oinstall could be as early as Tuesday the 14th. Please provide direction by 12-14-10 if possible.

We propose to move the fire hydrant location 6¿ West to Stn. 5+64. Please advise.

SUGGESTION:

ANSWER: **Accept Suggestion:** ☐

Due to the close proximity to the existing street light at the suggested location, please construct the hydrant east of the existing driveway at STA 5+87.5.

U-0044 **Unidentified 4ft x 6.5ft Wall Encountered in Minna St. - 1ft from FOC** **Closed** **12/15/2010** **12/25/2010** **12/20/2010** **Potentially** ☐

From: Webcor Construction LP David Hungerford **To:** Turner Construction Compan Kevin Chiu **Answered By:** AECOM Technical Servic Eric Zagol

Co-Author:

REQUEST:

Reference: Sheet U-1007, attached sketch of section from

SUGGESTION:

ANSWER: **Accept Suggestion:** ☐

Demolish and remove structure as required to

Number	Subject	Status	Date Created	Date Required	Date Answered	Cost Impact	Proceed

Trinet RFI 22 and documentation of notifications to USA North

See the attached section through the investigative trench at station 2 + 29.68 on Minna St. Per note 4 on sheet U-1007, Trinet hereby requests that Webcor "notify TJPA" of the unidentified 4' x 6.5' wall (bottom was not found) at 1' from north face of curb and 18" to cover that Trinet encountered in the east wall of the trench. Per the same note, Trinet requests "direction on the demolition" of this structure.

Trinet has this plated but would like to backfill the trench as soon as possible. An expedited response is requested with official direction on how to proceed with this facility by 12/16/10.

construct Joint Trench.

U-0045 **Unidentified Concrete Wall Encountered in Minna St. - in line with FOC** **Closed** **12/15/2010** **12/25/2010** **12/29/2010** **Potentially** ☐

From: Webcor Construction LP David Hungerford **To:** Turner Construction Compan Kevin Chiu **Answered By:** AECOM Technical Servic Eric Zagol

Co-Author:

REQUEST:

Reference: Sheet U-1007, attached sketch of section from Trinet RFI 23 and documentation of notifications to USA North

See the attached section through the investigative trench at station 2 + 29.68 on Minna St. Per note 4 on sheet U-1007, Trinet hereby requests that Webcor "notify TJPA" of the unidentified concrete wall (bottom was not found) in line with the north face of curb and 30" to cover that Trinet encountered in their trenching. Per the same note, Trinet requests "direction on the demolition" of this structure. Also, this wall may effect Trinet's ability to build the catchbasin at Station 2+13.

Trinet has this plated but would like to backfill the trench as soon as possible. An expedited response is requested with official direction on how to proceed with this facility by 12/16/10.

SUGGESTION:

ANSWER: **Accept Suggestion:** ☐

Two part question, responses are as follows:

1. In reference to the exposed concrete wall, TJPA Representative to confirm that the concrete wall exposed is an old sub sidewalk basement backfilled with concrete during construction of the 101 Second St. building.

2. In reference to "this wall may effect Trinet's ability to build the catchbasin at Station 2+13", pothole in accordance with the contract documents at catch basin location to identify any conflicts.

Answered by Eric Zagol
AECOM 12/29/2010

Number	Subject	Status	Date Created	Date Required	Date Answered	Cost Impact	Proceed
U-0046	**Unidentified Concrete Wall Encountered in Fremont St. - in line with FOC**	**Closed**	**12/15/2010**	**12/25/2010**	**12/29/2010**	**Potentially**	☐

From: Webcor Construction LP David Hungerford **To:** Turner Construction Compan Kevin Chiu **Answered By:** AECOM Technical Servic Eric Zagol

Co-Author:

REQUEST:

Reference: Sheet U-1008, attached sketch of section from Trinet RFI 24 and documentation of notifications to USA North

See the attached section through the investigative trench at station 4+40 on Fremont St. Per note 4 on sheet U-1008, Trinet hereby requests that Webcor "notify TJPA" of the unidentified concrete structure wall (the bottom was not found) at the east face of curb and 18" to cover that Trinet encountered in their trenching which was not indicated on the contract plan. Per the same note, Trinet requests "direction on the demolition" of this structure.

Trinet has this plated but would like to backfill the trench as soon as possible. An expedited response is requested with official direction on how to proceed with this facility by 12/16/10.

SUGGESTION:

ANSWER: **Accept Suggestion:** ☐

Unknown concrete wall to be demolished by Transit Center Project (NIP) within the area impacted by the CDSM shoring wall and mass excavation.

Answered by Eric Zagol
AECOM 12/29/2010

U-0047	**Unidentified 3in Pipe Encountered in Fremont St. - 5ft-8in from FOC**	**Closed**	**12/15/2010**	**12/25/2010**	**12/30/2010**	**Potentially**	☐

From: Webcor Construction LP David Hungerford **To:** Turner Construction Compan Kevin Chiu **Answered By:** AECOM Technical Servic Eric Zagol

Co-Author:

REQUEST:

Reference: Sheet U-1008, attached sketch of section from Trinet RFI 25 and documentation of notifications to USA North

See the attached section through the investigative trench at station 4+40 on Fremont St. Per note 4 on sheet U-1008, Trinet hereby requests that Webcor "notify TJPA" of the unidentified 3"steel pipe at 5'-8" from the east face of curb and 4'-3" to cover that Trinet encountered in their trenching which was not indicated on the contract plan. Per the same note, Trinet requests "direction on the demolition" of this line.

Trinet has this plated but would like to backfill the trench as soon as possible. An expedited response is requested with official direction on how to proceed with this facility by 12/16/10.

SUGGESTION:

ANSWER: **Accept Suggestion:** ☐

Unknown unforeseen existing utility condition.

In accordance with specification 00 08 10 section 1.3 EXISTING UTILITIES NOT INDICATED and specification 020630 section 4.1 POTHOLING AND TRENCHING OPERATIONS paragraph C, please proceed with the following in order to identify all interfering utilities that are unknown after all specified procedures or other non destructive methods proposed by the contractor have been exhausted:

Pipe: If conductive material, perform subsurface investigation via electromagnetic detection (or other nondestructive methods) to trace utility back to nearest vault, pull box, manhole or valve to identify owner and content. If nonconductive, excavate along pipe alignment to expose coating and a joint. Inspect and provide information on coating and joint type. If content is still unknown, tap each line in order to

Number	Subject	Status	Date Created	Date Required	Date Answered	Cost Impact	Proceed

identify contents and operating status of utility (i.e. abandoned or operational.)

Conduit and duct bank: Determine if utility is a charged electric utility utilizing a contractor that performs NETA type work. Determine if telecommunication cables are operational.

Once the utility has been identified including owner and contents, and determined inactive or de-energized, cut and cap utility at the demolition demarcation line shown in the drawings.

U-0048 **Unidentified 3in Pipe Encountered in Fremont St. - 6ft-10in from FOC** **Closed** **12/15/2010** **12/25/2010** **12/30/2010** **Potentially** ☐

From: Webcor Construction LP David Hungerford **To:** Turner Construction Compan Kevin Chiu **Answered By:** AECOM Technical Servic Eric Zagol

Co-Author:

REQUEST:

Reference: Sheet U-1008, attached sketch of section from Trinet RFI 26 and documentation of notifications to USA North

See the attached section through the investigative trench at station 4+40 on Fremont St. Per note 4 on sheet U-1008, Trinet hereby requests that Webcor "notify TJPA" of the unidentified 3" steel pipe at 6'-10" from the east face of curb and 18" to cover that Trinet encountered in their trenching which was not indicated on the contract plan. Per the same note, Trinet requests "direction on the demolition" of this line.

Trinet has this plated but would like to backfill the trench as soon as possible. An expedited response is requested with official direction on how to proceed with this facility by 12/16/10.

SUGGESTION:

ANSWER: **Accept Suggestion:** ☐

Unknown unforeseen existing utility condition.

In accordance with specification 00 08 10 section 1.3 EXISTING UTILITIES NOT INDICATED and specification 020630 section 4.1 POTHOLING AND TRENCHING OPERATIONS paragraph C, please proceed with the following in order to identify all interfering utilities that are unknown after all specified procedures or other non destructive methods proposed by the contractor have been exhausted:

Pipe: If conductive material, perform subsurface investigation via electromagnetic detection (or other nondestructive methods) to trace utility back to nearest vault, pull box, manhole or valve to identify owner and content. If nonconductive, excavate along pipe alignment to expose coating and a joint. Inspect and provide information on coating and joint type. If content is still unknown, tap each line in order to identify contents and operating status of utility (i.e. abandoned or operational.)

Number	Subject	Status	Date Created	Date Required	Date Answered	Cost Impact	Proceed

Conduit and duct bank: Determine if utility is a charged electric utility utilizing a contractor that performs NETA type work. Determine if telecommunication cables are operational.

Once the utility has been identified including owner and contents, and determined inactive or de-energized, cut and cap utility at the demolition demarcation line shown in the drawings.

U-0049 **Unidentified 1in Pipe Encountered in Fremont St. - 6ft-10in from FOC** **Closed** **12/15/2010** **12/25/2010** **12/30/2010** **Potentially** ☐

From: Webcor Construction LP David Hungerford **To:** Turner Construction Compan Kevin Chiu **Answered By:** AECOM Technical Servic Eric Zagol

Co-Author:

REQUEST:

Reference: Sheet U-1008, attached sketch of section from Trinet RFI 27 and documentation of notifications to USA North

See the attached section through the investigative trench at station 4+40 on Fremont St. Per note 4 on sheet U-1008, Trinet hereby requests that Webcor "notify TJPA" of the unidentified 1" steel pipe at 6'-10" from the east face of curb and 4'-3" to cover that Trinet encountered in their trenching which was not indicated on the contract plan. Per the same note, Trinet requests "direction on the demolition" of this line.

Trinet has this plated but would like to backfill the trench as soon as possible. An expedited response is requested with official direction on how to proceed with this facility by 12/16/10.

SUGGESTION:

ANSWER: **Accept Suggestion:** ☐

Unknown unforeseen existing utility condition.

In accordance with specification 00 08 10 section 1.3 EXISTING UTILITIES NOT INDICATED and specification 020630 section 4.1 POTHOLING AND TRENCHING OPERATIONS paragraph C, please proceed with the following in order to identify all interfering utilities that are unknown after all specified procedures or other non destructive methods proposed by the contractor have been exhausted:

Pipe: If conductive material, perform subsurface investigation via electromagnetic detection (or other nondestructive methods) to trace utility back to nearest vault, pull box, manhole or valve to identify owner and content. If nonconductive, excavate along pipe alignment to expose coating and a joint. Inspect and provide information on coating and joint type. If content is still unknown, tap each line in order to identify contents and operating status of utility (i.e. abandoned or operational.)

Conduit and duct bank: Determine if utility is a charged electric utility utilizing a contractor that performs NETA type work. Determine if

Number	Subject	Status	Date Created	Date Required	Date Answered	Cost Impact	Proceed

telecommunication cables are operational.

Once the utility has been identified including owner and contents, and determined inactive or de-energized, cut and cap utility at the demolition demarcation line shown in the drawings.

U-0050 **Lower Sewer Laterals on Minna** **Closed** **12/15/2010** **12/25/2010** **01/11/2011** **Potentially** ☐

From: Webcor Construction LP Mario Saldana Sr. **To:** Turner Construction Compan Kevin Chiu **Answered By:** AECOM Technical Servic Eric Zagol

Co-Author:

REQUEST:

Reference: Sheets U-3007 & 3008, and Trinet RFI 41

Two of the active sewer service laterals potholed on Minna St.are lower than the new sewer main and will not drain. The details of each issue are as follows:
1. Station 5+05 - Service for #2 Shaw Alley
Top of pipe grade @ FOC for the 6" VCP sewer lateral is 11.37 . The invert elevation is approximately 10.8. The invert elevation of the new 24" sewer main @ Station 5+05 is approximately 11.4

2. Station 2+10 - Service for Anchor & Hope Restaurant
Top of pipe grade @ FOC for the 6" VCP sewer lateral is 13.51. The invert elevation is approximately 12.94. The invert of the new 18" VCP sewer main @ Station 2+10 is approximately 13.4.

Please review these issues and advise. An expedited response is requested by 12/16/10.

SUGGESTION:

ANSWER: **Accept Suggestion:** ☐

1/11/11

See revised Sewer Plan and Elevation Phase I Plans titled "Revisions - Minna Street 12/27/10" for revisions to sewer main elevations.

****

12/27/10

Adjust new sewer main in Minna Street to accommodate existing laterals as shown in the "Minna Street Revisions" sheet revision forthcoming addressing both this RFI and RFI U-0017.

U-0051 **Unidentified 6in x 6in Concrete Duct Encountered in Fremont St. - 10ft-1in from FC** **Closed** **12/15/2010** **12/25/2010** **01/01/2011** **Potentially** ☐

From: Webcor Construction LP David Hungerford **To:** Turner Construction Compan Kevin Chiu **Answered By:** AECOM Technical Servic Eric Zagol

Co-Author:

Number	Subject	Status	Date Created	Date Required	Date Answered	Cost Impact	Proceed

REQUEST:

Reference: Sheet U-1008, attached sketch of section from Trinet RFI 30 and documentation of notifications to USA North

See the attached section through the investigative trench at station 4+40 on Fremont St. Per note 4 on sheet U-1008, Trinet hereby requests that Webcor "notify TJPA" of the unidentified 6in x 6in concrete duct at 10'-1" from the east face of curb and 5' to cover that Trinet encountered in their trenching which was not indicated on the contract plan. Per the same note, Trinet requests "direction on the demolition" of this line.

Trinet has this plated but would like to backfill the trench as soon as possible. An expedited response is requested with official direction on how to proceed with this facility by 12/16/10.

SUGGESTION:

ANSWER: **Accept Suggestion:** ☐

Unknown unforeseen existing utility condition.

In accordance with specification 00 08 10 section 1.3 EXISTING UTILITIES NOT INDICATED and specification 020630 section 4.1 POTHOLING AND TRENCHING OPERATIONS paragraph C, please proceed with the following in order to identify all interfering utilities that are unknown after all specified procedures or other non destructive methods proposed by the contractor have been exhausted:

Pipe: If conductive material, perform subsurface investigation via electromagnetic detection (or other nondestructive methods) to trace utility back to nearest vault, pull box, manhole or valve to identify owner and content. If nonconductive, excavate along pipe alignment to expose coating and a joint. Inspect and provide information on coating and joint type. If content is still unknown, tap each line in order to identify contents and operating status of utility (i.e. abandoned or operational.)

Conduit and duct bank: Determine if utility is a charged electric utility utilizing a contractor that performs NETA type work. Determine if telecommunication cables are operational.

Once the utility has been identified including owner and contents, and determined inactive or de-energized, cut and cap utility at the demolition demarcation line shown in the drawings.

Note, 6"x6" conc. duct is in the same alignment as PG&E's excavated manhole 1675. Coordinate with PG&E to see if PG&E has demolished this line.

U-0052	**Unidentified 12in Pipe Encountered in Fremont St. - 11ft-6in from FOC**	**Closed**	**12/15/2010**	**12/25/2010**	**12/20/2010**	**Potentially**	☐

From: Webcor Construction LP David Hungerford **To:** Turner Construction Compan Kevin Chiu **Answered By:** AECOM Technical Servic Eric Zagol

Co-Author:

Number	Subject	Status	Date Created	Date Required	Date Answered	Cost Impact	Proceed

REQUEST:

Reference: Sheet U-1008, attached sketch of section from Trinet RFI 32 and documentation of notifications to USA North

See the attached section through the investigative trench at station 4+40 on Fremont St. Per note 4 on sheet U-1008, Trinet hereby requests that Webcor "notify TJPA" of the unidentified 12" steel pipe at 11'-6" from the east face of curb and 3'-6" to cover that Trinet encountered in their trenching which was not indicated on the contract plan. Per the same note, Trinet requests "direction on the demolition" of this line.

Trinet has this plated but would like to backfill the trench as soon as possible. An expedited response is requested with official direction on how to proceed with this facility by 12/16/10.

SUGGESTION:

ANSWER: **Accept Suggestion:** ☐

Confirm with PG&E that the 12" steel line identified is an abandoned PG&E 12" cast iron gas main. Following confirmation from PG&E, cut and cap existing abandoned 12" cast iron gas main at the demarcation line shown on U-1123.

U-0053 **Unidentified 3in Pipe Encountered in Fremont St. - 10ft-3in from FOC** **Closed** **12/15/2010** **12/25/2010** **12/30/2010** **Potentially** ☐

From: Webcor Construction LP David Hungerford **To:** Turner Construction Compan Kevin Chiu **Answered By:** AECOM Technical Servic Eric Zagol

Co-Author:

REQUEST:

Reference: Sheet U-1008, attached sketch of section from Trinet RFI 31 and documentation of notifications to USA North

See the attached section through the investigative trench at station 4+40 on Fremont St. Per note 4 on sheet U-1008, Trinet hereby requests that Webcor "notify TJPA" of the unidentified 3" steel pipe at 10'-3" from the east face of curb and 3'-10" to cover that Trinet encountered in their trenching which was not indicated on the contract plan. Per the same note, Trinet requests "direction on the demolition" of this line.

Trinet has this plated but would like to backfill the trench as soon as possible. An expedited response is requested with official direction on how to proceed with this facility by 12/16/10.

SUGGESTION:

ANSWER: **Accept Suggestion:** ☐

Unknown unforeseen existing utility condition.

In accordance with specification 00 08 10 section 1.3 EXISTING UTILITIES NOT INDICATED and specification 020630 section 4.1 POTHOLING AND TRENCHING OPERATIONS paragraph C, please proceed with the following in order to identify all interfering utilities that are unknown after all specified procedures or other non destructive methods proposed by the contractor have been exhausted:

Pipe: If conductive material, perform subsurface investigation via electromagnetic detection (or other nondestructive methods) to trace utility back to nearest vault, pull box, manhole or valve to identify owner and content. If nonconductive, excavate along pipe alignment to expose coating and a joint. Inspect and provide information on coating and joint type. If content is still unknown, tap each line in order to

Number	Subject	Status	Date Created	Date Required	Date Answered	Cost Impact	Proceed

identify contents and operating status of utility (i.e. abandoned or operational.)

Conduit and duct bank: Determine if utility is a charged electric utility utilizing a contractor that performs NETA type work. Determine if telecommunication cables are operational.

Once the utility has been identified including owner and contents, and determined inactive or de-energized, cut and cap utility at the demolition demarcation line shown in the drawings.

Note, 3" steel pipe is in the same alignment as PG&E's excavated manhole 1675. Coordinate with PG&E to see if PG&E has demolished this line.

U-0054 **Unidentified Pair of 4in Pipes Encountered in Fremont St. - 22ft from FOC** **Closed** **12/15/2010** **12/25/2010** **12/30/2010** **Potentially** ☐

From: Webcor Construction LP David Hungerford **To:** Turner Construction Compan Kevin Chiu **Answered By:** AECOM Technical Servic Eric Zagol

Co-Author:

REQUEST:

Reference: Sheet U-1008, attached sketch of section from Trinet RFI 33 and documentation of notifications to USA North

See the attached section through the investigative trench at station 4+40 on Fremont St. Per note 4 on sheet U-1008, Trinet hereby requests that Webcor "notify TJPA" of the unidentified pair of 4" steel pipes at 22' from the west face of curb and 2'-7" to cover that Trinet encountered in their trenching which was not indicated on the contract plan. Per the same note, Trinet requests "direction on the demolition" of this line.

Trinet has this plated but would like to backfill the trench as soon as possible. An expedited response is requested with official direction on how to proceed with this facility by 12/16/10.

SUGGESTION:

ANSWER: **Accept Suggestion:** ☐

Unknown unforeseen existing utility condition.

In accordance with specification 00 08 10 section 1.3 EXISTING UTILITIES NOT INDICATED and specification 020630 section 4.1 POTHOLING AND TRENCHING OPERATIONS paragraph C, please proceed with the following in order to identify all interfering utilities that are unknown after all specified procedures or other non destructive methods proposed by the contractor have been exhausted:

Pipe: If conductive material, perform subsurface investigation via electromagnetic detection (or other nondestructive methods) to trace utility back to nearest vault, pull box, manhole or valve to identify owner and content. If nonconductive, excavate along pipe alignment to expose coating and a joint. Inspect and provide information on coating and joint type. If

Number	Subject	Status	Date Created	Date Required	Date Answered	Cost Impact	Proceed

content is still unknown, tap each line in order to identify contents and operating status of utility (i.e. abandoned or operational.)

Conduit and duct bank: Determine if utility is a charged electric utility utilizing a contractor that performs NETA type work. Determine if telecommunication cables are operational.

Once the utility has been identified including owner and contents, and determined inactive or de-energized, cut and cap utility at the demolition demarcation line shown in the drawings.

U-0055 **Unidentified 10in Pipe Encountered in Fremont St. - 14ft 3in from FOC** **Closed** **12/15/2010** **12/25/2010** **12/20/2010** **Potentially** ☐

From: Webcor Construction LP David Hungerford **To:** Turner Construction Compan Kevin Chiu **Answered By:** AECOM Technical Servic Eric Zagol

Co-Author:

REQUEST:

Reference: Sheet U-1008, attached sketch of section from Trinet RFI 34 and documentation of notifications to USA North

See the attached section through the investigative trench at station 4+40 on Fremont St. Per note 4 on sheet U-1008, Trinet hereby requests that Webcor "notify TJPA" of the unidentified 10" steel pipe at 14'-3" from the west face of curb and 2'-11" to cover that Trinet encountered in their trenching which was not indicated on the contract plan. Per the same note, Trinet requests "direction on the demolition" of this line.

Trinet has this plated but would like to backfill the trench as soon as possible. An expedited response is requested with official direction on how to proceed with this facility by 12/16/10.

SUGGESTION:

ANSWER: **Accept Suggestion:** ☐

Confirm with PG&E that the 10" steel line identified is an abandoned PG&E 10" cast iron gas main. Following confirmation from PG&E, cut and cap existing abandoned 10" cast iron gas main at the demarcation line shown on U-1123.

U-0056 **Unidentified 4in Pipe Encountered in Fremont St. - 12ft 3in from FOC** **Closed** **12/15/2010** **12/25/2010** **12/29/2010** **Potentially** ☐

Number	Subject	Status	Date Created	Date Required	Date Answered	Cost Impact	Proceed

From: Webcor Construction LP David Hungerford **To:** Turner Construction Compan Kevin Chiu **Answered By:** AECOM Technical Servic Eric Zagol

Co-Author:

REQUEST:

Reference: Sheet U-1008, attached sketch of section from Trinet RFI 35 and documentation of notifications to USA North

See the attached section through the investigative trench at station 4+40 on Fremont St. Per note 4 on sheet U-1008, Trinet hereby requests that Webcor "notify TJPA" of the unidentified 4" steel pipe at 12'-3" from the west face of curb and 2' to cover that Trinet encountered in their trenching which was not indicated on the contract plan. Per the same note, Trinet requests "direction on the demolition" of this line.

Trinet has this plated but would like to backfill the trench as soon as possible. An expedited response is requested with official direction on how to proceed with this facility by 12/16/10.

SUGGESTION:

ANSWER: **Accept Suggestion:** ☐

Confirm 4" steel pipe is SFPUC BLHP street light conduit as shown in the Plans. Once confirmed demolish in accordance with the Demolition Plans.

U-0057 **Unidentified 2.5in Pipes Encountered in Fremont St. - 4ft 10in from FOC** **Closed** **12/15/2010** **12/25/2010** **12/30/2010** **Potentially** ☐

From: Webcor Construction LP David Hungerford **To:** Turner Construction Compan Kevin Chiu **Answered By:** AECOM Technical Servic Eric Zagol

Co-Author:

REQUEST:

Reference: Sheet U-1008, attached sketch of section from Trinet RFI 36 and documentation of notifications to USA North

See the attached section through the investigative trench at station 4+40 on Fremont St. Per note 4 on sheet U-1008, Trinet hereby requests that Webcor "notify TJPA" of the unidentified pair of 2.5" steel pipes at 4'-10" from the west face of curb and 21" to cover that Trinet encountered in their trenching which was not indicated on the contract plan. Per the same note, Trinet requests "direction on the demolition" of this line.

Trinet has this plated but would like to backfill the trench as soon as possible. An expedited response is requested with official direction on how to proceed with this facility by 12/16/10.

SUGGESTION:

ANSWER: **Accept Suggestion:** ☐

Unknown unforeseen existing utility condition.

In accordance with specification 00 08 10 section 1.3 EXISTING UTILITIES NOT INDICATED and specification 020630 section 4.1 POTHOLING AND TRENCHING OPERATIONS paragraph C, please proceed with the following in order to identify all interfering utilities that are unknown after all specified procedures or other non destructive methods proposed by the contractor have been exhausted:

Pipe: If conductive material, perform subsurface investigation via electromagnetic detection (or other nondestructive methods) to trace utility back to nearest vault, pull box, manhole or valve to identify owner and content. If nonconductive, excavate along pipe alignment to expose coating and a joint. Inspect and provide information on coating and joint type. If content is still unknown, tap each line in order to

Number	Subject	Status	Date Created	Date Required	Date Answered	Cost Impact	Proceed

identify contents and operating status of utility (i.e. abandoned or operational.)

Conduit and duct bank: Determine if utility is a charged electric utility utilizing a contractor that performs NETA type work. Determine if telecommunication cables are operational.

Once the utility has been identified including owner and contents, and determined inactive or de-energized, cut and cap utility at the demolition demarcation line shown in the drawings.

Note, 2-2.5" steel pipes are in the same alignment as PG&E's excavated manhole 1674. Coordinate with PG&E to see if PG&E has demolished this line.

U-0058 **Unidentified 4in Pipe Encountered in Fremont St. - 2ft from FOC** **Closed** **12/15/2010** **12/25/2010** **12/29/2010** **Potentially** ☐

From: Webcor Construction LP David Hungerford **To:** Turner Construction Compan Kevin Chiu **Answered By:** AECOM Technical Servic Eric Zagol

Co-Author:

REQUEST:

Reference: Sheet U-1008, attached sketch of section from Trinet RFI 37 and documentation of notifications to USA North

See the attached section through the investigative trench at station 4+40 on Fremont St. Per note 4 on sheet U-1008, Trinet hereby requests that Webcor "notify TJPA" of the unidentified 4" steel pipe at 2' from the west face of curb and 15" to cover that Trinet encountered in their trenching which was not indicated on the contract plan. Per the same note, Trinet requests "direction on the demolition" of this line.

Trinet has this plated but would like to backfill the trench as soon as possible. An expedited response is requested with official direction on how to proceed with this facility by 12/16/10.

SUGGESTION:

ANSWER: **Accept Suggestion:** ☐

Confirm 4" steel pipe is SFPUC BLHP street light conduit as shown in the Plans. Once confirmed demolish in accordance with the Demolition Plans.

Answered by Eric Zagol
AECOM 12/29/2010

Webcor/Obayashi Joint Venture

PROJECT MANAGEMENT - REQUEST AND ANSWERS LOG

30100 - Transbay Transit Center Project

Number	Subject	Status	Date Created	Date Required	Date Answered	Cost Impact	Proceed
U-0059	Unidentified 6in Pipe Encountered in Fremont St. - in line with FOC	Closed	12/15/2010	12/25/2010	01/03/2011	Potentially	☐

From: Webcor Construction LP David Hungerford **To:** Turner Construction Compan Kevin Chiu **Answered By:** AECOM Technical Servic Eric Zagol

Co-Author:

REQUEST:

Reference: Sheet U-1008, attached sketch of section from Trinet RFI 38 and documentation of notifications to USA North

See the attached section through the investigative trench at station 4+40 on Fremont St. Per note 4 on sheet U-1008, Trinet hereby requests that Webcor "notify TJPA" of the unidentified 6" clay pipe at the west face of curb and 4'-7" to cover that Trinet encountered in their trenching which was not indicated on the contract plan. Per the same note, Trinet requests "direction on the demolition" of this line.

Trinet has this plated but would like to backfill the trench as soon as possible. An expedited response is requested with official direction on how to proceed with this facility by 12/16/10.

SUGGESTION:

ANSWER: **Accept Suggestion:** ☐

Possible existing Transbay Terminal sewer laterals. Coordinate with Existing Terminal & Ramps Demolition Plans Project (Demolition Project) through the TJPA Representative to confirm that the Demolition Project has abandoned sewer laterals. Sewer laterals should be abandoned per SFDPW Standards.

Once confirmed abandoned, cut and plug at the demarcation line shown in the Drawings.

U-0060	Unidentified 6in Pipe Encountered in Fremont St. - in line with FOC	Closed	12/15/2010	12/25/2010	01/04/2011	Potentially	☐

From: Webcor Construction LP David Hungerford **To:** Turner Construction Compan Kevin Chiu **Answered By:** AECOM Technical Servic Eric Zagol

Co-Author:

REQUEST:

Reference: Sheet U-1008, attached sketch of section from Trinet RFI 39 and documentation of notifications to USA North

See the attached section through the investigative trench at station 4+40 on Fremont St. Per note 4 on sheet U-1008, Trinet hereby requests that Webcor "notify TJPA" of the unidentified 6" clay pipe in line with the west face of curb and 6'-6" to cover that Trinet encountered in their trenching which was not indicated on the contract plan. Per the same note, Trinet requests "direction on the demolition" of this line.

Trinet has this plated but would like to backfill the trench as soon as possible. An expedited response is requested with official direction on how to proceed with this facility by 12/16/10.

SUGGESTION:

ANSWER: **Accept Suggestion:** ☐

Possible existing Transbay Terminal sewer laterals. Coordinate with Existing Terminal & Ramps Demolition Plans Project (Demolition Project) through the TJPA Representative to confirm that the Demolition Project has abandoned sewer laterals. Sewer laterals should be abandoned per SFDPW Standards.

Once confirmed abandoned, cut and plug at the demarcation line shown in the Drawings.

Number	Subject	Status	Date Created	Date Required	Date Answered	Cost Impact	Proceed
U-0061	**Revised drawing for 8" water line on Minna St. at Second St.**	**Closed**	**12/20/2010**	**12/30/2010**	**12/21/2010**	**Potentially**	☐

From: Webcor Construction LP Mario Saldana Sr. **To:** Turner Construction Compan Kevin Chiu **Answered By:** AECOM Technical Servic Eric Zagol

Co-Author:

REQUEST:

Reference: Sheet U-3407

Please provide drawing for the 8" water line and vertical / hydrant installation on Minna St. (reference RFI U-0017 response) west of Station 1+02. Please provide A.S.A.P. as field construction should be at this point by Tuesday pm.

SUGGESTION:

ANSWER: **Accept Suggestion:** ☐

Please see the attached sketch that shows revisions to the water line along Minna Street as a result of the Joint Trench realignment due to the sub sidewalk basement conflict at 133 Second St.

U-0062	**Unidentified 8in Pipe Encountered in Fremont St. - 8ft 3in from FOC**	**Closed**	**12/22/2010**	**01/01/2011**	**01/03/2011**	**Potentially**	☐

From: Webcor Construction LP David Hungerford **To:** Turner Construction Compan Kevin Chiu **Answered By:** AECOM Technical Servic Eric Zagol

Co-Author:

REQUEST:

Reference: Sheet U-1008 (dated 2010.09.29) and attached sketch from Trinet

See attached section through the investigative trench at Station 4+40 on Fremont St. Per note 4, on sheet U-1008 Trinet requests direction on an unidentified 8" steel pipe found 8'-3" from the East face of curb and 4'-4" to cover that was encountered but not indicated on the contract documents.

Trinet has this plated but would like to backfill the trench as soon as possible. An expedited response is requested with official direction on how to proceed with this pipe by 12/27/10.

SUGGESTION:

ANSWER: **Accept Suggestion:** ☐

Unknown unforeseen existing utility condition.

In accordance with specification 00 08 10 section 1.3 EXISTING UTILITIES NOT INDICATED and specification 020630 section 4.1 POTHOLING AND TRENCHING OPERATIONS paragraph C, please proceed with the following in order to identify all interfering utilities that are unknown after all specified procedures or other non destructive methods proposed by the contractor have been exhausted:

Pipe: If conductive material, perform subsurface investigation via electromagnetic detection (or other nondestructive methods) to trace utility back to nearest vault, pull box, manhole or valve to identify owner and content. If nonconductive, excavate along pipe alignment to expose coating and a joint. Inspect and provide information on coating and joint type. If content is still unknown, tap each line in order to identify contents and operating status of utility (i.e. abandoned or operational.)

Conduit and duct bank: Determine if utility is a charged electric utility utilizing a contractor that performs NETA type work. Determine if telecommunication cables are operational.

Once the utility has been identified including owner and contents, and determined inactive or de-

Number	Subject	Status	Date Created	Date Required	Date Answered	Cost Impact	Proceed

energized, cut and cap utility at the demolition demarcation line shown in the drawings.

Note, 8" steel pipe is in the same alignment as PG&E's excavated manhole 1675. Coordinate with PG&E to see if PG&E has demolished this line.

U-0063 **Unmarked service lateral on Minna St. at Station 3+08** **Closed** **12/22/2010** **01/01/2011** **12/27/2010** **Potentially** ☐

From: Webcor Construction LP David Hungerford **To:** Turner Construction Compan Kevin Chiu **Answered By:** AECOM Technical Servic Eric Zagol

Co-Author:

REQUEST:

Reference: Sheet U-3107 (dated 2010.09.29)

During excavation for the 8" water main along Minna Street, Trinet encountered a 1" Polyethylene service lateral at station 3+08, that extended into the vacant lot on the south side of the street. The service was broken during construction and Trinet has temporarily capped it. The utility was not shown on any utility plans. There is also no new service lateral, or reconnection of an existing, depicted on the new water main drawings at or adjacent to this location. Please advise on what should be done with the service. The repair is only temporary and a permanent reconnection will need to be performed by the SFWD if the service is to be maintained active. If the service is to be de-activated, then Trinet recommends that it be shut off at the connection to the old main.

SUGGESTION:

ANSWER: **Accept Suggestion:** ☐

Unknown service lateral to vacant lot. Coordinate with SFWD through TJPA Representative to shut off broken lateral.

Answered by Eric Zagol
AECOM 12/27/2010

U-0064 **Unidentified Facility in First St. Invest Trench - from Stn. 9+70 to 9+59.5** **Closed** **12/22/2010** **01/01/2011** **01/03/2011** **Potentially** ☐

From: Webcor Construction LP David Hungerford **To:** Turner Construction Compan Kevin Chiu **Answered By:** AECOM Technical Servic Eric Zagol

Co-Author:

REQUEST:

Reference: Sheet U-1007 and attached sketch of areas plan view

SUGGESTION:

ANSWER: **Accept Suggestion:** ☐

Unknown unforeseen existing utility condition.

In accordance with specification 00 08 10 section 1.3

Number	Subject	Status	Date Created	Date Required	Date Answered	Cost Impact	Proceed

See attached, plan views of the investigative trench on the East side of First St, West of the concrete MUNI median, from Stn. 9+70 to 9+59.5. Per note 4 on sheet U -1007, Trinet requests direction on the 4" Cardboard Pipe found 2'-0" West of the concrete MUNI median face of curb and 3'-6" to cover that was encountered but not indicated on the plans.

Trinet has this plated but would like to backfill the trench as soon as possible. An expedited response is requested with official direction on how to proceed with this facility by 12/23/10.

EXISTING UTILITIES NOT INDICATED and specification 020630 section 4.1 POTHOLING AND TRENCHING OPERATIONS paragraph C, please proceed with the following in order to identify all interfering utilities that are unknown after all specified procedures or other non destructive methods proposed by the contractor have been exhausted:

Pipe: If conductive material, perform subsurface investigation via electromagnetic detection (or other nondestructive methods) to trace utility back to nearest vault, pull box, manhole or valve to identify owner and content. If nonconductive, excavate along pipe alignment to expose coating and a joint. Inspect and provide information on coating and joint type. If content is still unknown, tap each line in order to identify contents and operating status of utility (i.e. abandoned or operational.)

Conduit and duct bank: Determine if utility is a charged electric utility utilizing a contractor that performs NETA type work. Determine if telecommunication cables are operational.

Once the utility has been identified including owner and contents, and determined inactive or de-energized, cut and cap utility at the demolition demarcation line shown in the drawings.

U-0065 **Two Unidentified 4" Pipes in First St. Invest Trench from Stn. 10+00 to 9+70** **Closed** **12/23/2010** **01/02/2011** **12/29/2010** **Potentially** ☐

From: Webcor Construction LP David Hungerford **To:** Turner Construction Compan Kevin Chiu **Answered By:** AECOM Technical Servic Eric Zagol

Co-Author:

REQUEST:

Reference: Sheet U-1007, attached sketch of areas in plan and section, attached USA North tickets

See attached plan and section through the investigative trench on the East side of First St.from Stn. 10+00 to 9+70. Per note 4 on sheet U-1007 Trinet requests

SUGGESTION:

ANSWER: **Accept Suggestion:** ☐

Confirm 2-4" concrete and redwood encased pipes are the inactive 2-3" AT&T conduits from AT&T manhole TMH1887 to the Existing Transbay Terminal as shown in the Plans. Once confirmed demolish in accordance with the Demolition Plans.

Number	Subject	Status	Date Created	Date Required	Date Answered	Cost Impact	Proceed

direction regarding the two 4" concrete and redwood encased pipes found at the East face of curb and down 2'-3" that was encountered but not indicated on the plans.

Trinet has this plated but would like to backfill the trench as soon as possible. An expedited response is requested with official direction on how to proceed with this facility by 12/27/10.

Answered by Eric Zagol
AECOM 12/29/2010

U-0066 | **Minna St Station 2+09 - 4" Water Service Lateral Encountered** | **Closed** | **12/23/2010** | **01/02/2011** | **12/28/2010** | **Potentially** ☐

From: Webcor Construction LP David Hungerford **To:** Turner Construction Compan Kevin Chiu **Answered By:** AECOM Technical Servic Eric Zagol

Co-Author:

REQUEST:

Refer to Sheet U-3107

During the water installation on Minna St we encountered an existing 4" water service lateral at Sta 2+09. The 4" service extends from the old 8" water main to 83 Minna St (Anchor & Hope Restaurant). This is in addition to a 1" service lateral to the same building which we encountered at station 2+09. The contract drawings only show the 1" water lateral service connecting to the new main.

Please advise if the existing 4" service lateral is active and if it must be connected to the new water main. There was no material on site to install a tee in the line, and to avoid delaying the work, the new water main isntallation continued past the 4" service lateral. The recommendation is that if the 4" service line needs to be connected to the new main, work can be performed by SFWD as an additional tie-in.

SUGGESTION:

ANSWER: **Accept Suggestion:** ☐

Existing 4-inch service for 83 Minna Street is indicated in specification 331160 Appendix A. Service is an active fire service to 83 Minna Street and must be connected to the new 8-inch water main.

Furnish and install 8"x8"x4" tee with joint restraint in accordance with the specifications. Furnish and install service 4-inch DIP, fittings and valve. Set 4-inch service and valve elevation to match existing 4-inch service elevation.

Connection from new 4-inch service valve to existing 4-inch service by SFWD.

Answered by Eric Zagol
AECOM 12/28/2010

U-0066.1 | **Minna St Station 2+09 - 4in Water Service Lateral Encountered** | **Closed** | **01/10/2011** | **01/20/2011** | **01/14/2011** | **Potentially** ☐

From: Webcor Construction LP Jason Dunne **To:** Turner Construction Compan Kevin Chiu **Answered By:** AECOM Technical Servic Eric Zagol

Co-Author:

REQUEST:

Reference Sheet U-3107 and Trinet RFI 059.1

SUGGESTION:

ANSWER: **Accept Suggestion:** ☐

Construct water serive lateral in accordance with

Number	Subject	Status	Date Created	Date Required	Date Answered	Cost Impact	Proceed

This is a follow up to the engineer's response to Trinet RFI #59 (RFI#U-0066). Upon further evaluation of the 4" fire service connection at 83 Minna by Tom Farhnam (SFWD Senior Inspector), the water department proposed the attached installation detail for an 8"x4" tee in the 8" main, to be performed by Trinet, and the connection detail to the existing 4" service, to be performed later by the SFWD crew. This change was proposed to avoid conflicting utilities running along the south side of teh new 8" main. AECOM's Design Engineer, Eric Zagol, was advised of the changed design plan proposed by SFWD in the field on 12/28/2010. Please confirm if the attached plan is acceptable and approved for construction.

contractor's attached plan and note the following:

1. Provide full joint restraint in accordance with contract documents

2. Provide 4" DI pipe for the section labeled "9" DI NIPPLE"

U-0067 **Buried Manhole in First St. Invest Trench - 15ft 7in from FOC** **Closed** **12/23/2010** **01/02/2011** **12/28/2010** **Potentially** ☐

From: Webcor Construction LP David Hungerford **To:** Turner Construction Compan Kevin Chiu **Answered By:** AECOM Technical Servic Eric Zagol

Co-Author:

REQUEST:

Reference: Sheet U-1007, attached section and plan sketches, and attached documentation of notifications to USA North

See the highlighted man hole on attached plan and section through the investigative trench on the East side of First St.from Stn. 10+00 to 9+70. Per note 4 on sheet U-1007 Trinet requests direction regarding the unidentified manhole found 15'-7" from the East face of curb and buried 4'-6" deep that was encountered but not indicated on the contract plans.

Trinet has this plated but would like to backfill the trench as soon as possible. An expedited response is requested with official direction on how to proceed with this wall by 12/27/10.

SUGGESTION:

ANSWER: **Accept Suggestion:** ☐

Manhole appears to be an abandoned separated sanitary sewer manhole.

Please provide data on utility material (e.g. brick) and condition (e.g. filled with sand or concrete) in accordance with 02630 4.1 G.5 such that the demolition can be determined.

Answered by Eric Zagol
AECOM 12/28/2010

U-0068 **Minna St Water Main Conflict w Abandoned Sewer MH** **Closed** **12/23/2010** **01/02/2011** **12/27/2010** **Potentially** ☐

From: Webcor Construction LP David Hungerford **To:** Turner Construction Compan Kevin Chiu **Answered By:** AECOM Technical Servic Eric Zagol

Number	Subject	Status	Date Created	Date Required	Date Answered	Cost Impact	Proceed

Co-Author:

REQUEST:

See attached drawings adn photos

During the water main installation on Minna St, Trinet encountered what appears to be an old abandoned sewer manhole in the trench line at station 1+15. the structure was not indicated on the drawings and was not discovered untill the pavement asphalt was removed. The sewer manhole is direclty in conflict with the alignment of the new water main. The installation of the watermin cannot proceed furhter untill the manhole is demolished and/ or abandoned.

Per a field walk with Eric Zagol on 12/23/10, the existing MH was confirmed abondoned. Please confirm/ advise the top of the MH will be demolished to allow the installation of the waterline, and the MH will be backfilled with CDF.

****Please provide direction by 12/28/10.

SUGGESTION:

ANSWER: **Accept Suggestion:** ☐

1. Remove and dispose of existing abandoned separated sanitary sewer system manhole to a depth of 1 foot below bottom of new water main.

2. Plug existing abandoned 8-inch sanitary sewer with concrete per 024100 3.6 A.

3. Backfill abandoned manhole with CDF to an elevation 1 foot below bottom of new water main.

4. Provide 6-inches of bedding material between CDF and bottom of trench bedding per Detail 7 on Sheet U-5101 such that the total depth
of trench bedding crossing the abandoned structure is 1 foot.

Answered by Eric Zagol
AECOM 12/27/2010

U-0069 **Street Light CCTV Camera-East Side of Fremont St. @ Stn. 5+45** **Closed** **01/05/2011** **01/15/2011** **01/14/2011** **Potentially** ☐

From: Webcor Construction LP Richard Buellesbach **To:** Turner Construction Compan Kevin Chiu **Answered By:** AECOM Technical Servic Eric Zagol

Co-Author:

REQUEST:

Reference Sheet U-3302 and Trinet RFI 62

During removal of the light pole arm on the east side of Fremont St. @ Stn. 5+45, Trinet observed that there is a CCTV camera and associated wiring on the light pole. Please advise of the plan for removal of CCTV camera.

SUGGESTION:

ANSWER: **Accept Suggestion:** ☐

1/14/11

Remove and salvage existing CCTV camera as part of the traffic signal equipment removal. Deliver traffic signal equipment and camera to the Traffic Signal Shop Yard in accordance with specification 02 41 00 par. 3.4 C 4.

****

1/12/11

Please clarify how this RFI relates to RFI U-0073 "VOID - reference RFI U-0069"

Webcor/Obayashi Joint Venture

PROJECT MANAGEMENT - REQUEST AND ANSWERS LOG

30100 - Transbay Transit Center Project

Number	Subject	Status	Date Created	Date Required	Date Answered	Cost Impact	Proceed
U-0070	**Subsurface Structures in Conflict with Minna St. AT&T Vault**	**Closed**	**01/10/2011**	**01/20/2011**	**01/12/2011**	**Potentially**	☐

From: Webcor Construction LP Jason Dunne **To:** Turner Construction Compan Kevin Chiu **Answered By:** AECOM Technical Servic Eric Zagol

Co-Author:

REQUEST:

Reference Sheet U-2008 and Trinet RFI 63

During our potholing on Minna St. for the proposed AT&T vault in the sidewalk (Stn. 3+72), we encountered an existing subsurface foundation and slurry shoring wall. The top of the subsurface foundation is at a depth of approximately 4' from the top of the sidewalk and is in conflict with the installation of the proposed AT&T vault. Installation of the proposed AT&T vault in accordance with the plans will require partial demolition of the existing foundation wall encountered. Please advise.

SUGGESTION:

ANSWER: **Accept Suggestion:** ☐

As determined during a site visit on 1/10/11 with W/O, Turner, AECOM and Tishman Speyer, the exposed wall is an abandoned sidewalk basement wall. Remove and dispose of existing abandoned sidewalk basement wall as required (approx. 1.5 feet in depth) to construct proposed AT&T vault.

U-0071	**Existing fittings at tie in location for Minna St. 8 in. Water Main (Stn. 9+30)**	**Closed**	**01/10/2011**	**01/20/2011**	**01/12/2011**	**Potentially**	☐

From: Webcor Construction LP Richard Buellesbach **To:** Turner Construction Compan Kevin Chiu **Answered By:** AECOM Technical Servic Eric Zagol

Co-Author:

REQUEST:

Reference Sheet U-3109 and Trinet RFI 64

Due to the presence of existing fittings installed in the existing 8 inch water main at our tie in location (Stn. 9+30) at First St. and Minna St. for the new 8 inch water main on Minna St., SFWD inspector Dan Helmnik has requested to extend the limits of the tie in excavation beyond the locations of the existing fittings. This is beyond what would normally be required for a tie in of this nature. Existing conditions were reviewed in the field by W/O, Turner, SFWD, Eric Zagol from Aecom, and Trinet personnel.

Please advise. An expedited response is requested.

SUGGESTION:

ANSWER: **Accept Suggestion:** ☐

Provide labor and equipment to excavate and shore trench for pipes, fittings, and valves as necessary for connections to the existing water mains by SFWD in accordance with U-3100 Note 4 and specification section 33 11 00 par. 3.5.

U-0072	**Fremont St traffic Signal Pole to be removed and salvaged - has Muni Cable attach**	**Closed**	**01/10/2011**	**01/20/2011**	**01/18/2011**	**Potentially**	☐

From: Webcor Construction LP David Hungerford **To:** Turner Construction Compan Kevin Chiu **Answered By:** Turner Construction Comp Jack Adams

Co-Author:

REQUEST:

Reference Sheet U-3302 and Trinet RFI 65

SUGGESTION:

ANSWER: **Accept Suggestion:** ☐

J. Adams 01/18/2011

Number	Subject	Status	Date Created	Date Required	Date Answered	Cost Impact	Proceed

Per contract, Trinet is required to remove and salvage the existing light pole indicated in the attached drawing. Through observation in the field, the existing light pole has a MUNI cable attached which runs to the intersection of Fremont St. and Mission St.. Based on these findings, should the light pole be removed as indicated? Mario Saldana from W/O was present when this item was observed and issue has been discussed with Eric Zagol from AECOM.

Please advise. An expedited response is requested by 01/12/2011.

These are MUNI OCS Poles not Lighting Poles. Both OCS poles along east side of Fremont near 301 Mission Tower are in use by MUNI OCS System. MUNI has designated each OCS pole to hold different guy wires at Fremont and Mission see Demolition drawing Sheet 105 of 137. The poles are to remain and be deleted from Webcor-Obayashi/Trinet scope.

NOTE: Evans Bros Subcontractor Reliance Electric are to correct OCS cables to both of these OCS Poles. Reference Demolition drawing plan sheet 105 of 137. A second cable will be installed at OCS Pole 4030 and the cable will be reinstalled at OCS Pole directly north of Pole 4030 per contract.

****

J. Adams 01/13/2011

The MUNI Overhead Contact System (OCS) Pole in question not light pole. This OCS pole was to have the guy wires relocated to nearby MUNI OCS Pole by the Demolition Contractor in July 2010 during mods to Transbay Terminal MUNI OCS system. Demo drawing plan sheet 105 of 137 shows the guy wires relocated to pole 4030 - this is in EBi scope.

Pole 4030 is shown to remain per Demo drawing above - But, Pole 4030 is shown to be removed per RUP U-3302 .

It should be noted that upon relocation of this OCS guywire the removal of the pole is Webcor-Obayashi scope per drawing U-3302.

****

E. Zagol 01/13/2011

Change in existing conditions. New MUNI guy wire was attached to existing pole at STA 5+45 as part of the Existing Terminal & Ramps Demolition Plans project.

1. Remove and salvage traffic signal equipment per U-

Number	Subject	Status	Date Created	Date Required	Date Answered	Cost Impact	Proceed

3302.

2. Protect in place existing MUNI pole.

****

E. Zagol 01/12/2011

Change in existing conditions. New MUNI guy wire was attached to existing pole at STA 5+45 as part of the Existing Terminal & Ramps Demolition Plans project. Existing Terminal & Ramps Demolition Plans project to remove the MUNI pole at STA 5+60.

1. Remove and salvage traffic signal equipment per U-3302.

2. Protect in place existing MUNI pole at STA 5+60.

U-0073 **Fremont St. Light Pole and Muni Cables to be protected - indicated light pole has r** **Closed** **01/10/2011** **01/20/2011** **Potentially** ☐

From: Webcor Construction LP David Hungerford **To:** Turner Construction Compan Kevin Chiu **Answered By:**

Co-Author:

REQUEST:

Reference Sheet U-3302 Traffic Signal E and Trinet RFI 66

As indicated on the plans, Trinet is required to "Remove and Salvage Traffic Signal Equipment. Protect Pole and Muni Cables in Place." Conditions were reviewed in the field and there is no Muni cable attached to the (E) light pole.

Mario Saldana from W/O has observed there is a CCTV cable attached to the pole not mentioned in Trinet RFI 66 and requests clarification on ownership and status of the CCTV line. This issue has been discussed with Eric Zagol from AECOM.

Please advise. An expedited response is requested by

SUGGESTION:

ANSWER: **Accept Suggestion:** ☐

Number	Subject	Status	Date Created	Date Required	Date Answered	Cost Impact	Proceed

01/12/2011.

U-0074 **Unidentified 9in Concrete Wall in First St Invest Trench - 10ft-5in west of Conc. Mu** **Closed** **01/10/2011** **01/20/2011** **01/25/2011** **Potentially** ☐

From: Webcor Construction LP Jason Dunne **To:** Turner Construction Compan Kevin Chiu **Answered By:** AECOM Technical Servic Eric Zagol

Co-Author:

REQUEST:

Reference Sheet U-1007 Traffic Signal E and Trinet RFI 051

See attached, plan views of the investigative trench on the east side of First St., west of the concrete Muni median, from Stn. 9+70 to 9+59.5. Per note 4 of sheet U-1007, Trinet requests that Webcor "notify TJPA" of the unidentified 9" concrete wall at 10ft-5in west of the concrete Muni median face of curb and 3ft-6in cover that Trinet encountered "not indicated on plans". Per same note, Trinet requests "direction on the demolition" of this structure. Trinet has plated but would like to backfill the trench as soon as possible. Please advise.

SUGGESTION:

ANSWER: **Accept Suggestion:** ☐

Unknown concrete wall to be demolished by Transit Center Project (NIP) within the area impacted by the CDSM shoring wall and mass excavation.

U-0075 **Water Main Connection at 2nd St and Minna St - expose new line for SFWD** **Closed** **01/11/2011** **01/21/2011** **01/12/2011** **Potentially** ☐

From: Webcor Construction LP Mario Saldana **To:** Turner Construction Compan Michelle Smith **Answered By:** AECOM Technical Servic Eric Zagol

Co-Author:

REQUEST:

Reference Sheet U-3107 and attached photos

At the intersection of 2nd St and Minna St, there is an existing 2in gas line running directly on top and next to the existing 8in main to be tied into. SFWD cannot make the Tee connection due to the bells of the fittings with the 2in gas line so close.

The end of the new line installed by Trinet will need to be exposed about 2ft for SFWD to move the end of the line by 1ft east so that SFWD can make the connection without moving the gas line. This will require extra work for Trinet to expose the new line for SFWD. Eric Zangol

SUGGESTION:

ANSWER: **Accept Suggestion:** ☐

Provide labor and equipment to excavate and shore trench for pipes, fittings, and valves as necessary for connections to the existing water mains by SFWD in accordance with U-3100 Note 4 and specification section 33 11 00 par. 3.5.

Number	Subject	Status	Date Created	Date Required	Date Answered	Cost Impact	Proceed

from AECOM and Dan Helminiak from SFWD were present during the discussion of this issue.

Please provide direction as soon as possible as this will impact the chlorination and tie-in schedule.

U-0076 **Water Main Connection at 2nd St and Minna St - demo/excavate per SFWD** **Closed** **01/11/2011** **01/21/2011** **01/14/2011** **Potentially** ☐

From: Webcor Construction LP Mario Saldana **To:** Turner Construction Compan Michelle Smith **Answered By:** AECOM Technical Servic Eric Zagol

Co-Author:

REQUEST:

Reference Sheet U-3107 and attached photos

At the intersection of 2nd St and Minna St, the new 8in water main is to be connected to an existing 6in water line. The new 8in line installed by Trinet is above and below existing utilities, and SFWD requires more demo/excavation to make the connection.

This will require extra work for Trinet to demo/excavate per SFWD. Inspector Dan Helminiak is scheduling the SFWD to come back and measure this afternoon (01/11/2011). Eric Zangol from AECOM was also present during the discussion of this issue.

Please provide direction as soon as possible as this will impact the chlorination and tie-in schedule.

SUGGESTION:

ANSWER: **Accept Suggestion:** ☐

Provide labor and equipment to excavate and shore trench for pipes, fittings, and valves as necessary for connections to the existing water mains by SFWD in accordance with U-3100 Note 4 and specification section 33 11 00 par. 3.5.

U-0077 **Fire Hydrant Installation at Minna St Stn. 0+90** **Closed** **01/12/2011** **01/22/2011** **01/14/2011** **Potentially** ☐

From: Webcor Construction LP David Hungerford **To:** Turner Construction Compan Michelle Smith **Answered By:** AECOM Technical Servic Eric Zagol

Co-Author:

REQUEST:

Reference Sheet U-3107

With reference to the fire hydrant at Minna St. Stn. 0+90, (northeast corner of Second St. and Minna St.) General Note #5 on sheet U-3107 directs Trinet to "replace in place existing fire hydrant."

SUGGESTION:

ANSWER: **Accept Suggestion:** ☐

As discussed on site with Daniel Helminiak (SFPUC Inspector) and those mentioned above, the proposed construction sequencing of the fire hydrant at Minna St. STA 0+90 is acceptable.

Coordinate with Daniel Helminiak (or assigned SFPUC

Number	Subject	Status	Date Created	Date Required	Date Answered	Cost Impact	Proceed

Per on site field discussions with Eric Zagol from AECOM, Robert Friend from Trinet and Mario Saldana from W/O, it was determined that the existing hydrant would remain in place until after the new water main connections are performed by CDD crews. After which the existing hydrant will be removed and new hydrant and lateral piping will be installed and tested.

Please confirm if this is acceptable. An expedited response is requested.

Inspector) and the SFWD to ensure the fire hydrant is properly decommissioned by SFWD and SFFD following main connections by SFWD and prior to abandonment of the existing main in Minna Street by SFWD prior to fire hydrant installation by Trinet. Coordinate with SFPUC inspector to ensure SFWD and SFFD installs a black hydrant "donut" on the existing fire hydrant and new fire hydrant prior to the new fire hydrant being placed in service. Coordinate the removal of the "donut" once new fire hydrant is in service.

U-0078 **6in and 4in Service Laterals to 2 Shaw Alley** **Closed** **01/12/2011** **01/22/2011** **01/14/2011** **Potentially** ☐

From: Webcor Construction LP David Hungerford **To:** Turner Construction Compan Michelle Smith **Answered By:** AECOM Technical Servic Eric Zagol

Co-Author:

REQUEST:

Reference Sheet U-2008

The existing 4" water service found at Stn. 5+37 has been confirmed abandoned by SFWD personnel through on site investigations. Since the service is determined to be inactive, Trinet intends to not provide service from the new main for this 4" service as discussed in the field, with Eric Zagol from AECOM, Mario Saldana from W/O, Dan Helminick from SFWD and Robert Friend from Trinet. In addition, Dan Helmnick from SFWD requested to have the service tee installed in the new 8" main which was to provide service for this 4" lateral removed and straight pipe installed. Please confirm if this is acceptable.

The 6" water service lateral found at Stn. 5+30 has been confirmed as an active fire service to 2 Shaw Alley by SFWD personnel through on site investigations. Trinet intends to provide service from the new water main for this 6" service as discussed in the field with Eric Zangol from AECOM, Mario Saldana from W/O, Dan Helminiak from SFWD and Robert Friend from Trinet.

An expedited response is requested.

SUGGESTION:

ANSWER: **Accept Suggestion:** ☐

Existing 4" water service at STA 5+37. Subsurface utility investigations should have been performed and submitted prior to installation of water main to determine status of existing lateral in accordance with U-3108 General Note No. 3. It is acceptable to remove the 8"x8"x4" tee installed and replace with straight pipe per the request of SFPUC SFWD inspector.

Provide 6" water service later at STA 5+30 per contract documents.

AECOM suggests that there is no change in contract price to perform this work.

Number	Subject	Status	Date Created	Date Required	Date Answered	Cost Impact	Proceed
U-0079	**Fremont St Temp Water Line Installed over AT&T Duct**	**Closed**	**01/17/2011**	**01/27/2011**	**01/19/2011**	**Potentially**	☐

From: Webcor Construction LP Nhi Tran **To:** Turner Construction Compan Michelle Smith **Answered By:** AECOM Technical Servic Eric Zagol

Co-Author:

REQUEST:

Reference Sheet U-3123 and attached detail

During Trinet's installation of the temporary water line in Fremont St., Trinet encountered an existing AT&T duct that was in direct conflict with the temporary water line. Trinet was directed by Eugene Chu of SFWD/SFPUC to run the temporary water line over the existing AT&T duct using 45 degree bends. This resulted in less cover for the piping than what is required by the Water Department. Due to the lack of cover, Trinet was directed to install a 1/2in steel plate beneath the concrete base along the trench as depicted in the attached detail. The plate was approximately 2ft wide by 6ft long and extended to the limits of the installed 45 degree bends.
Please provide confirmation that this is acceptable.

SUGGESTION:

ANSWER: **Accept Suggestion:** ☐

It is AECOM's understanding that Trinet encounter an existing PG&E electrical duct (4-4") crossing the water alignment feeding 301 Mission property and not an AT&T duct as referenced above. It is also AECOM's understanding that Trinet encountered an existing PG&E electrical duct (8-3") parallel to the water alignment which is ultimately to be abandoned by PG&E and demolished by Trinet. Both PG&E ducts are shown in the plans. Per sequencing shown on U-1123, the water line should be constructed after PG&E completes their work on Fremont Street.

Given the fact that the PG&E duct parallel (8-3") has not been abandoned by PG&E, and given the fact the option to go under the existing 4-4" PG&E duct per plans is not feasible because the existing 8-3" PG&E duct is not demolished, and given the fact that the new water main is a temporary condition, the above mentioned installation proposal is acceptable.

AECOM suggests no additional cost to contract price to perform this work.

U-0080	**Proposed Design Change for MH #501**	**Closed**	**01/17/2011**	**01/27/2011**	**01/28/2011**	**Potentially**	☐

From: Webcor Construction LP Nhi Tran **To:** Turner Construction Compan Michelle Smith **Answered By:** AECOM Technical Servic Eric Zagol

Co-Author:

REQUEST:

Reference Sheet U-2021 and attached drawings

Trinet proposes to change the design of sewer manhole #501 from a Modified Box Manhole (per SF Standard Plan #87,184) to a Precast Concrete Manhole (per SF Standard Plan #87,181 - see attached drawing). The proposal includes the installation of a temporary 24" PVC pipe stub, extending south from the manhole and connected to the brick sewer per SF Standard Plan #87,197.

The proposed manhole design will facilitate construction around the many utilities identified in the excavation - see RFI # U-0021 (Trinet RFI 04). It is also the preferred manhole design for 24in pipe per the SF Standard

SUGGESTION:

ANSWER: **Accept Suggestion:** ☐

CCSF DPW Standard Plan #87,181 referenced specifies a 4 ft diameter precast concrete manhole. Three (3) 24-inch pipes connecting to a 4 ft diameter manhole at invert elevation as proposed by contractor may yield an unstable structure and is not approved. A larger diameter precast concrete manhole may be acceptable however the alternative would need to be submitted as a substitution for CCSF SFDPW approval.

As per the response to RFI U-0021, please provide a mark up of U-3021 indicating the size, and horizontal and vertical location of the utilities identified in the excavation for review.

Number	Subject	Status	Date Created	Date Required	Date Answered	Cost Impact	Proceed

Drawings, especially since the brick sewer on the south side will later be abandoned and plugged (in the manhole) by the owner. This plan will also facilitate the later abandonment of the outlet to the south, as the owner will just have to plug the 24in outlet pipe and not a 3x5 brick sewer.

Please consider. An expedited response is requested.

U-0080.1 **Proposed Design Change for MH #501** **Closed** **02/09/2011** **02/18/2011** **02/22/2011** **Potentially** ☐

From: Webcor Construction LP Nhi Tran **To:** Turner Construction Compan Michelle Smith **Answered By:** Turner Construction Comp Kevin Chiu

Co-Author:

REQUEST:

Reference Sheet U-2021, RFI #U-0080, and attached drawings

In response to the Engineer's concerns with the number and size of pipes in Trinet's original revised detail for MH 501 (RFI#U-0080), Trinet has changed their proposed installation drawing to include a 5' I.D. cast-in-place MH base. The lower precast section of the MH will be 5' I.D., with a precast reducer section transitioning from 60" to 48" I.D. placed above. Attached is the revised drawing for MH 501 and shop drawings for the precast MH sections. The design was discussed with Cliff Wong from the SF Bureau of Engineering, Hydraulics Department, and he did not have a problem with a 5' I.D. manhole.

Trinet requests an expedited response.

SUGGESTION:

ANSWER: **Accept Suggestion:** ☐

02/22/2011 - Kevin Chiu

A Change Request (CR) may be issued for the accepted substitution of the 5-foot diameter precast concrete manhole in lieu of the cast in place Modified Box Manhole.

02/18/2011 - Eric Zagol

The proposed design change for sewer manhole #501 from a Modified Box Manhole per SFDPW Standard Plan #87,184 included in the contract documents to a 5-foot diameter precast concrete manhole with a temporary 24¿ PVC pipe connection to the existing 3¿x5¿ brick sewer per SFDPW Standard Plan #87,197 is acceptable.

Provide flexible pipe connections to the 5-foot diameter precast concrete manhole as shown in SFDPW Standard Plan #87,181.

As per the response to RFI U-0080 and U-0021, please provide a markup of U-3021 indicating the size, and horizontal and vertical location of the utilities identified in conflict for review. This request is now 7

Number	Subject	Status	Date Created	Date Required	Date Answered	Cost Impact	Proceed

weeks outstanding.

AECOM suggests a cost credit for the substitution of the 5-foot diameter precast concrete manhole for the larger cast in place Modified Box Manhole per contract documents.

U-0081 **Water Main Alignment - Howard St STA18+72 and STA19+98** **Closed** **01/19/2011** **01/28/2011** **01/24/2011** **Potentially** ☐

From: Webcor Construction LP Nhi Tran **To:** Turner Construction Compan Michelle Smith **Answered By:** AECOM Technical Servic Eric Zagol

Co-Author:

REQUEST:

Reference Sheet U-3119 and attached drawing

Please confirm that it is acceptable for M Squared to install the new 12in water line in a straight line as sketched on the attachment. Contract Drawings show the pipe offsetting between Sta 18+72 and Sta 19+98.
Due to existing utilities discovered in potholes the 12in line will be installed 18ft from centerline.

Also, please confirm the elevations of the water line can be raised dependant on the depths of the existing utilities

Also, the referenced drawing has a discrepancy shown between the 12in water line bend station called out and the location shown in plan view. Please confirm that the first 45degree bend is located at 18+72, and not 18+27.

SUGGESTION:

ANSWER: **Accept Suggestion:** ☐

1. Contract Drawings indicate an offset to avoid a bus island, as shown on the plans, that was to be constructed as part of the Transbay Temporary Terminal Project. AECOM received confirmation from Philip Sandri TJPA/PMPC that the bus island was deleted from the Transbay Terminal Project. It is acceptable to eliminate the offset and construct water main between STA 18+72 and STA 19+98 at 18ft from centerline.

2. Elevations of the water line can be raised dependant on the depth of the existing utilities. Minimum depth of cover shall be 18-inches below the bottom of the concrete base pavement section per DPW Order No. 176,707 or 28" which ever is greater.

3. 45 degree at STA 18+72. 45 degree bend no longer required due to response provided in item 1 above.

U-0082 **Sewer System Quality Assurance Clarification** **Closed** **01/19/2011** **01/29/2011** **01/21/2011** **Potentially** ☐

From: Webcor Construction LP Nhi Tran **To:** Turner Construction Compan Michelle Smith **Answered By:** Turner Construction Comp Michelle Smith

Co-Author:

REQUEST:

Reference Specifications Section 33 31 10, 1.4.E

SUGGESTION:

ANSWER: **Accept Suggestion:** ☐

For general materials, please follow the specification

Number	Subject	Status	Date Created	Date Required	Date Answered	Cost Impact	Proceed
U-0083	Water Main Alignment on Howard at Beale	Closed	01/19/2011	01/29/2011	01/20/2011	Potentially	☐

From: Webcor Construction LP Nhi Tran **To:** Turner Construction Compan Michelle Smith **Answered By:** AECOM Technical Servic Eric Zagol

Co-Author:

Please clarify if TJPA or DPW is going to complete the inspection of the pipe as described in the referenced specification section.

requirements regarding delivered materials in 01 16 00 1.6D.

For materials falling under specification section 33 31 31, section 1.4C determines that all piping is SUBJECT to inspection by TJPA and/or DPW. This means that all piping is to be made available upon delivery if TJPA/DPW deems it is necessary to inspect the material. Contractor to inform TJPA of all deliveries and assure the storage facility is accessible. TJPA will inform contractor if material will be inspected prior to installation. When TJPA determines that additional labor is needed to move materials around for inspection, please reference 1.4E, which states that contractor is to furnish labor as needed to assist TJPA with this effort.

There is no ¿HOLD POINT¿ for TJPA or SFWD to inspect materials at manufacturer or upon delivery. TJPA/DPW intends to inspect the materials deliveries of each subcontractor until such time as a confidence level is built that subcontractor and W/O are ensuring the proper amount of quality control through their own material inspections.

Per specification Section 01 14 00 1.4, W/O shall verify all dimensions in the field and shall check all field conditions continuously during construction, including materials. Any inspection of materials by TJPA, DPW, or any other agency does not alleviate the subcontractor or W/O of the responsibility of performing your own quality assurance measures, or constitute an acceptance of materials. Ultimately, it is the responsibility of the subcontractor and W/O to ensure the materials used for the project meet the contractual requirements set forth in the drawings and specifications.

Number	Subject	Status	Date Created	Date Required	Date Answered	Cost Impact	Proceed

REQUEST:

Reference Sheet U-3118

Potholes on Beale Street at Sta 14+00, Sta 14+90 and Sta 16+25 reveal a 6in steel line that is unmarked and not shown on contract drawings. The line is 18ft south of the Howard St centerline. This is the proposed alignment for the new 12in water main. The pothole at Sta 14+00 also reveals a 3in steel conduit which is 16ft south of the Howard St centerline. Also there is a 6ft x 6ft wooden telecom duct bank that runs east to west on Howard Street at 15ft south of the Howard Street centerline. This location offers the closest window for the new 12in water line to the original alignment shown in the contract drawings.

This would require the removal of the wooden duct bank and the removal of the abandoned manhole shown on U-3118 (Sta 14+96 ¿ 15ft from Howard St centerline)

Please confirm the alignment of the new 12in water main.

SUGGESTION:

ANSWER: **Accept Suggestion:** ☐

Existing 6-inch steel pipe appears to be a 6-inch cast iron abandoned PG&E gas main. Confirm the "6ft x 6ft wooden telecom duct bank" is a 6-inch x 6-inch wooden duct bank and is abandoned.

Refer to RFI # U-0083.1

U-0083.1 **Water Main Alignment on Howard at Beale** **Closed** **01/24/2011** **02/03/2011** **01/25/2011** **Potentially** ☐

From: Webcor Construction LP Nhi Tran **To:** Turner Construction Compan Michelle Smith **Answered By:** AECOM Technical Servic Eric Zagol

Co-Author:

REQUEST:

M Squared has confirmed that the wooden duct bank is a 6inch x 6 inch wooden duct bank and is abandoned.

Please direct M Squared on how to proceed.

****

Question from U-0083:

Reference Sheet U-3118

Potholes on Beale Street at Sta 14+00, Sta 14+90 and Sta 16+25 reveal a 6in steel line that is unmarked and not shown on contract drawings. The line is 18ft south of the Howard St centerline. This is the proposed alignment for the new 12in water main. The pothole at Sta 14+00 also reveals a 3in steel conduit which is 16ft south of the

SUGGESTION:

ANSWER: **Accept Suggestion:** ☐

Construct 12-inch water main at the location proposed; 15 ft south of Howard Street centerline. Remove and dispose of abandoned wooden duct bank and abandoned manhole as required to construct new 12-inch water main.

Refer to response provided for RFI U-0083.

Number	Subject	Status	Date Created	Date Required	Date Answered	Cost Impact	Proceed

Howard St centerline. Also there is a 6in x 6in wooden telecom duct bank that runs east to west on Howard Street at 15ft south of the Howard Street centerline. This location offers the closest window for the new 12in water line to the original alignment shown in the contract drawings.

This would require the removal of the wooden duct bank and the removal of the abandoned manhole shown on U-3118 (Sta 14+96 15ft from Howard St centerline)

Please confirm the alignment of the new 12in water main.

U-0084 **Water Main Alignment on Beale Street** **Closed** **01/21/2011** **01/31/2011** **01/25/2011** **Potentially** ☐

From: Webcor Construction LP Nhi Tran **To:** Turner Construction Compan Michelle Smith **Answered By:** AECOM Technical Servic Eric Zagol

Co-Author:

REQUEST:

Reference Sheet U-3124

M Squared potholed at Sta 1+10 on Beale Street. We discovered that the 10in High pressure water line is 9ft-5in from the FOC. The existing 12in water line is 14ft-8in from the FOC. The 10in High Pressure line is closer to the FOC that shown on contract drawings. This now means that there is a larger window between the 10in high pressure water and the existing 12in water main.

M Squared would like to install the new 12in water line at 12ft-3in from center line of the pipe to the FOC.
This would mean the new 12in water line would be outside the parking strip and the parking strip would stay in tact. SFWD would also prefer it outside the parking strip for maintenance purposes.

Please confirm that it is acceptable to install the new 12in water line at 12ft-3in from FOC, going from Sta 0+60 to Sta 1+90.

SUGGESTION:

ANSWER: **Accept Suggestion:** ☐

Contract drawings show existing 10-inch HPW (AWSS) at 9ft-7in from FOC. Contract drawings show existing 12-inch water line at 13 ft-11in from FOC.

Please clarify if dimensions provided by Contractor are to centerline of pipe.

Please provide depth to centerline of the existing 10-inch HPW (AWSS) potholed.

Contractor's proposed location at 12ft-3in from FOC is in conflict with proposed Beale St. sewer main.

Following receipt of information requested, AECOM will evaluate if water line can be moved west of parking strip.

U-0084.1 **Water Main Alignment on Beale Street** **Closed** **02/18/2011** **02/28/2011** **02/24/2011** **Potentially** ☐

Number	Subject	Status	Date Created	Date Required	Date Answered	Cost Impact	Proceed

From: Webcor Construction LP Nhi Tran **To:** Turner Construction Compan Michelle Smith **Answered By:** AECOM Technical Servic Eric Zagol

Co-Author:

REQUEST:

Reference Sheet U-3124 and RFI #U-0084

In response to the Engineer's questions, M Square has noted the following:
- Yes, the dimensions provided are to centerline of the pipe
- Depth to centerline of existing 10-inch AWSS is 72-inches

SUGGESTION:

ANSWER: **Accept Suggestion:** ☐

In reference RFI U-0084, it is not acceptable to install the new 12in water line at 12ft-3in from FOC, going from Sta 0+60 to Sta 1+90. As discussed during a site meeting with Noel M. (M2) and Mario S. (Webcor) on 2/11/11, construct 12-inch water line as shown on U-3124. Restore parking strip per Contract Documents.

U-0085 **AT&T Duct Bank on Beale at STA 6+00** **Closed** **01/21/2011** **01/31/2011** **01/27/2011** **Potentially** ☐

From: Webcor Construction LP Nhi Tran **To:** Turner Construction Compan Michelle Smith **Answered By:** AECOM Technical Servic Eric Zagol

Co-Author:

REQUEST:

Reference Sheet U-3125 and attached sketch

The existing 4no. 4in AT&T lines on Beale Street at Sta 6+10 are not as shown on the contract drawings. See attached sketch.
Contract drawings show the conduit crossing M Squared's trench for 6 or 7 feet, however the duct bank is in the trench for 37 feet due to the alignment and width of the duct bank. The conduits are covered with a 2 foot wide concrete cap and appear in the trench for the new 12in water main at Sta 6+12 before leaving the trench at Sta 5+75. M Sqaured cannot lay the pipe on top of the concrete cap as the pipe will not have the required coverage.
Due to this M Squared is unable to install the new 12in water as shown. Juan with AT&T advised that M Squared remove the concrete cap from the conduits to allow for excavation of this portion of trench. With the cap removed it is more likely that the pipe will have the necessary minimum coverage.

Please confirm that this is how M Squared is to proceed. An expedited reponse is requested.

SUGGESTION:

ANSWER: **Accept Suggestion:** ☐

Please proceed as per AT&T's suggestion.

Please coordinate with AT&T's representative Huan Hunynh and field representative Dave Olson for an onsite inspection by AT&T of the affected AT&T conduits prior to backfill.

Confirm minimum cover of 30-inches or 18-inches below concrete pavement base which ever is greater, is maintained.

Provide distance between top of water main and bottom of AT&T conduits for review.

Number	Subject	Status	Date Created	Date Required	Date Answered	Cost Impact	Proceed
U-0086	**Concrete Slab & Rail Ties at Howard STA 13+60**	**Closed**	**01/24/2011**	**02/03/2011**	**01/25/2011**	**Potentially**	☐

From: Webcor Construction LP Nhi Tran **To:** Turner Construction Compan Michelle Smith **Answered By:** AECOM Technical Servic Eric Zagol

Co-Author:

REQUEST:

Reference Sheet U-3117 and attached sketch

M Squared potholed at Howard Sta 13+60. The pothole revealed a 15in thick concrete slab which is in conflict with the proposed alignment of the new 12in water line.
M Squared broke out a cross section of the slab and found nothing in it. There was also nothing underneath the slab for 5.5 feet. The southern edge of the slab is 4 feet north of the Howard Street center line. M Squared also discovered 6inch x 8inch x 4foot-6inch wooden rail ties.

If M Squared has to remove the concrete slab to install the water line at the alignment shown there is a danger that the MFS (fiber optic) conduits will be damaged as these conduits sit on top of the slab.

Breaking off an 18in section of the concrete slab and also a section of the rail ties would allow M Squared to excavate and install the new water pipe, while keeping away from the MFS conduits and not damaging them. However this will be time consuming.

An alternative option is to move the trench for the new 12in water pipe 18in south and just remove the wooden rail ties (as shown in sketch).

Mario S. from W/O and Eric Z. from AECOM were present during the discussion of this issue with M Squared in the field.

Please direct M Squared on how to proceed with the water line installation. An expedited response is requested

SUGGESTION:

ANSWER: **Accept Suggestion:** ☐

As discussed during a site visit on 1/25/11 with Noel (M Squared) and Mario S. (W/O) the Contractor's proposed alignment of 18-inches south of alignment per Plans is in conflict with the existing sewer (limited separation).

As discussed, pothole along Howard St. between Fremont St. and First St. to determine if 15-inch concrete slab is a local condition at the intersection of Howard and Fremont streets or if the slab extends to First St.

U-0086.1	**Concrete Slab & Rail Ties at Howard STA 13+60**	**Closed**	**02/03/2011**	**02/14/2011**	**02/04/2011**	**Potentially**	☐

From: Webcor Construction LP Nhi Tran **To:** Turner Construction Compan Michelle Smith **Answered By:** AECOM Technical Servic Eric Zagol

Co-Author:

REQUEST:

As discussed at the meeting on Friday, 01/28/2011 between Noel (M2), Eric (AECOM) and Mario (Webcor) - due to existing utilities and the presence of the concrete

SUGGESTION:

ANSWER: **Accept Suggestion:** ☐

Confirmed. See attached sketches SK-U-0003 and SK-U-0004 for the revised alignment.

Number	Subject	Status	Date Created	Date Required	Date Answered	Cost Impact	Proceed

slab and rail ties found in the additional potholing that was requested (Ref. Response to RFI U-0086), the new 12in water main is to be installed 5ft from the northern FOC on Howard Street Sta 12+60 to Sta 9+50.

Please confirm.

U-0087 **Compact Sewer Backfill Sand by Jetting** **Closed** **01/27/2011** **02/06/2011** **02/03/2011** **Potentially** ☐

From: Webcor Construction LP Nhi Tran **To:** Turner Construction Compan Michelle Smith **Answered By:** AECOM Technical Servic Eric Zagol

Co-Author:

REQUEST:

Reference San Francisco Standard Specification Section 703.08, attached

Trinet requests authorization from the Engineer to compact the sewer trench backfill sand by jetting in accordance with the San Francisco Standard Specification Section 703.08.

The native material along Minna, which Trinet is re-using for trench backfill, is a clean well grade dune sand. Trinet believes jetting is an ideal method of compaction for this type of material. It is also an effective means of compacting the sand around the top and sides of the pipe without disturbing the pipe, and backfilling any voids left from removal of the shoring or that might have formed behind the shoring. This method of compaction is commonly utilized in San Francisco for sewer projects in similar ground conditions.

An expedited response is requested.

SUGGESTION:

ANSWER: **Accept Suggestion:** ☐

Jetting in accordance with CCSF DPW Standard Specification Section 703.08 of the backfill layers above the sand backfill (pipe zone) as specified in CCSF DPW Standard Specification Section 703.06 for sewer installations is acceptable.

Contractor shall determine that jetting will not result in damage to sewers, adjacent structures, or cause adjacent materials to be softened. Any resulting damage shall be repaired at the Contractors expense.

Meet compaction requirements for each horizontal lift. If compaction requirements are not met, discontinue the use of jetting.

Notify TJPA's geotechnical engineer through the TJPA representative in advance of jetting to coordinate on-site observation of jetting and compaction testing.

U-0088 **Minna St 18in Sewer Conflict with PG&E MH#1355 at STA 1+77** **Closed** **01/28/2011** **02/07/2011** **03/24/2011** **Potentially** ☐

From: Webcor Construction LP Nhi Tran **To:** Turner Construction Compan Michelle Smith **Answered By:** AECOM Technical Servic Eric Zagol

Co-Author:

REQUEST:

Reference Sheet U-2007 and attached drawings

SUGGESTION:

ANSWER: **Accept Suggestion:** ☐

==UPDATE== 3/24/11

Number	Subject	Status	Date Created	Date Required	Date Answered	Cost Impact	Proceed

During layout for the installation of the new 18in Sewer Main on Minna St., Trinet observed that the alignment of the 18in Sewer Main is in conflict with existing PG&E MH #1355 at STA 1+77.50,
which is to remain in place. The center line of the new sewer main is 0.10ft north of the outside edge of the manhole wall, as depicted in the attached drawing. The north side wall of the manhole is constructed on top of the existing 3ft x 5ft brick sewer. The brick sewer structure extends approximately 16in into the vault along its entire length. The brick sewer therefore cannot be demolished without undermining the north wall of the electric vault. Eric Z. of AECOM was notified of this issue via phone call on 01/21/2011.

Please advise:
1. How should Trinet proceed with the installation of the new 18in VCP Sewer at this location?
2. How should Trinet proceed with the demolition ofthe existing 3ft x 5ft brick sewer?

See revised drawings Minna Street Revisions dated 3/16/11 assoicated with ASI#003.

U-0089 **TJPA/DPW Inspection of Materials** **Closed** **01/31/2011** **02/10/2011** **02/02/2011** **Potentially** ☐

From: Webcor/Obayashi Joint Venture Bob Garcia **To:** Turner Construction Compan Kevin Chiu **Answered By:** Turner Construction Comp Michelle Smith

Co-Author:

REQUEST:

Ref. response to RFI U-0082, specs 331100, 011600:

In response to RFI U-0082 stated "TJPA/DPW intends to inspect the material deliveries of each subcontractor..."

Does the TJPA/DPW or Turner have an established material inspection protocol in place to allow W/O and the trade subcontractors to verify and document that the materials have been inspected by TJPA/DPW or Turner per the above referenced specifications?

SUGGESTION:

ANSWER: **Accept Suggestion:** ☐

Procedure for material inspections will be finalized as part of the QA/QC manual, to be issued by TJPA.

U-0090 **46 Minna St 6in Fire Service Connection** **Closed** **02/01/2011** **02/11/2011** **02/03/2011** **Potentially** ☐

Number	Subject	Status	Date Created	Date Required	Date Answered	Cost Impact	Proceed

From: Webcor Construction LP Nhi Tran **To:** Turner Construction Compan Michelle Smith **Answered By:** Turner Construction Comp Kevin Chiu

Co-Author:

REQUEST:

Reference Sheet U-3108 and attached sketch and photos

The original plan for connection of the 6in Fire Service Lateral @ 46 Minna St. was to leave the existing 6in gate valve (which is located at FOC) in place and connect the new 6in fire line to the downstream side of the old valve (See attached photo and sketch). This plan was proposed by SFWD inspectors, Tom Farhnam and Dan Helminiak, at a field meeting on 12/28/10. On Friday 1/28/11 the SFWD, plumbers when taking measurements for the tie-in, proposed a different plan. They want to extend the new 6in fire line beyond the curb and into the basement, and connect to the homeowners fire line inside the basement (under the sidewalk).

Note: This will require coordination with building owner to put a hole through their foundation. Layout and a detail would need to be provided for the wall penetration, as well a detail to plug the hole where the existing water line is entering the basement.

Please provide direction on how to proceed.

SUGGESTION:

ANSWER: **Accept Suggestion:** ☐

VOID.

See RFI U-0093, 46 Minna 6in FS Water & 1in Copper Water Service Lateral at STA 5+17 Tie-In.

U-0091 **SSMH #301 Located in Crosswalk at Natoma STA 0+81.72** **Closed** **02/01/2011** **02/11/2011** **02/24/2011** **Potentially** ☐

From: Webcor Construction LP Nhi Tran **To:** Turner Construction Compan Michelle Smith **Answered By:** AECOM Technical Servic Eric Zagol

Co-Author:

REQUEST:

Reference Sheet U-3010

SSMH #301 is shown to be located in the crosswalk at Sta 0+81.72.

Please confirm that it is to be located in the pedestrian crosswalk.

SUGGESTION:

ANSWER: **Accept Suggestion:** ☐

Construct sewer manhole #301 at the location shown on U-3010. An ASI for a revised SFDPW Standard manhole cover (ADA compliant) is forthcoming.

U-0092 **AWSS Schedule Restrictions** **Closed** **02/02/2011** **02/12/2011** **02/10/2011** **Potentially** ☐

From: Webcor Construction LP Richard Buellesbach **To:** Turner Construction Compan Michelle Smith **Answered By:** AECOM Technical Servic Eric Zagol

Co-Author:

Number	Subject	Status	Date Created	Date Required	Date Answered	Cost Impact	Proceed

REQUEST:

Webcor/Obayashi has received Bid Addendum #1 for the TG04.2R bid. As part of this addendum, note number 8 under "General Notes" on sheet U-0008 is deleted. This note had previously placed a constraint on the AWSS construction schedule that the Mission Street work must be complete prior to cutting both the Beale Street and the 1st Street lines. It was acceptable to abandon one or the other prior to the Mission Street work but not both.

Based on the deletion of this note, it is our understanding that there is no schedule constraint on any of the AWSS system modifications other than the cutting & capping proceedures at 1st Street and Beale Street which are required for construction of the TTC Building. Please confirm.

SUGGESTION:

ANSWER: **Accept Suggestion:** ☐

02/11/2011 - Richard Buellesbach Email to Michelle Smith & Kevin Chiu - The received response to RFI U-0092 is not complete. We require a final resolution for the following language from the RFI response:
"TJPA is currently coordinating with SFPUC to determine when AWSS improvements, other than the improvements required to abandon existing AWSS mains on First and Beale streets, are required to be complete."
Please be sure that this RFI remains open in Constructware.

02/10/2011 - Eric Zagol - The construction sequence constraint has been removed per GENERAL NOTE 8 on U-0008 (rev. 2 01/31/11) and as detailed in SFDPW BOE AWSS drawings (rev. 1 01/31/11) MA-0, MA-5, MA-6, MA-8, MA-10, MA-11 and MA-19.

TJPA is currently coordinating with SFPUC to determine when AWSS improvements, other than the improvements required to abandon existing AWSS mains on First and Beale streets, are required to be complete.

U-0093	46 Minna 6in FS Water & 1in Copper Water Service Lateral at STA 5+17 Tie-In	Closed	02/03/2011	02/13/2011	02/07/2011	Potentially ☐

From: Webcor Construction LP Nhi Tran **To:** Turner Construction Compan Michelle Smith **Answered By:** AECOM Technical Servic Eric Zagol

Co-Author:

REQUEST:

Reference Sheet U-3108, attached sketches, and material information sheets

At 11:30am on 2/2/2011, Michelle Smith (Turner), Eric Zagol (AECOM), Guy Hollins (TJPA), Rick Bowling (46 Minna Property Manager), Dan Helminiak (SFWD Inspector), SFWD water department crew, Robert Friend (Trinet), Jason Dunne (Webcor Obayashi), and Mario Saldana (Webcor Obayashi) met to discuss the 6in Fire Service Lateral and 1in Water Service Lateral for the 46 Minna building.

SUGGESTION:

ANSWER: **Accept Suggestion:** ☐

AECOM has coordinated with SFPUC Engineering (Chi Yu, Division Manager) and SFPUC inspector (Eugene Shu) and the direction agreed to is as follows:

6-inch Fire Service Renewal -

1. Coordinate with SFWD for the shutdown of the existing 6-inch fire water service. Shutdown by SFWD. SFWD to coordinate shutdown with SFFD.

Number	Subject	Status	Date Created	Date Required	Date Answered	Cost Impact	Proceed

SFWD has proposed the new tie-in pipe configuration.
1. New 6in Fire Service Lateral Tie-in at 46 Minna St (See Attachment A)
- Old existing fire service lateral is to be cut out of the existing water main up to the gate valve as shown in the sketch, and replaced with straight pipe. A new 10in hole is to be core drilled into the existing basement wall 22in east of the existing service lateral to incorporate the new 6in fire service lateral. SFWD will run the new 6in fire service lateral through the hole and Trinet is to provide Link Seals (see attached material information sheets) to seal the space between the new pipe and wall hole.

2. New 1in Copper Service Lateral Tie-in at STA 5+17 (See Attachment B)
- Old existing 1in plastic poly pipe is to be cut and plugged with non shrink grout. A new 2in hole is to be core drilled 4in east of the existing 1in service, to incorporate the new 1in copper service lateral. The space between the new pipe and wall hole will be sealed with non-shrink grout.

Please advise if this is acceptable. An expedited response is requested.

2. Neatly remove existing fill material between the existing pipe and wall penetration to dislodge and free the existing pipe such that it can be removed by SFWD.
3. SFWD to cut and remove existing pipe.
4. Remove excess fill material to create flat even surface for link seal type pipe sleeve.
5. SFWD to install and connect new service.
6. Restore wall per SK-U-0005 attached.

1-inch Water Service Renewal -

1. Coordinate with SFWD for the shutdown of the existing domestic water service. Shutdown by SFWD.

2. Neatly remove existing fill material between the existing pipe and wall penetration to dislodge and free the existing pipe such that it can be removed by SFWD.
3. SFWD to cut and remove existing pipe.
4. SFWD to install and connect new service.
5. Fill void between pipe and exposed wall penetration with non-shrink grout.

U-0093.1 | **46 Minna 6in FS Water & 1in Copper Water Service Lateral at STA 5+17 Tie-In** | **Closed** | **02/16/2011** | **02/25/2011** | **02/17/2011** | **Potentially** ☐

From: Webcor Construction LP Nhi Tran **To:** Turner Construction Compan Michelle Smith **Answered By:** AECOM Technical Servic Eric Zagol

Co-Author:

REQUEST:

Reference Response to RFI #U-0093, Sheet U-3108, and attached sketch

The SFWD completed the 1in domestic and 6in fire water service change-overs on 02/15/2011.
Part of the detailed provided in the response to RFI #U-0093 for the 46 Minna 6in Fire Service water lateral could not be installed due to the angle of the pipe installed by the SFWD.

Per discussion with E. Zagol of AECOM, please confirm

SUGGESTION:

ANSWER: **Accept Suggestion:** ☐

Confirmed. Fill the void on the property side with 2-5 inches of non-shrink grout, finishing grout flush with the inside wall.

Number	Subject	Status	Date Created	Date Required	Date Answered	Cost Impact	Proceed

the direction is to fill the void on the property side with 2-5 inches of non-shrink grout, finishing grout flush with the inside wall.

U-0094 **Joint Trench Alignment Conflict With (E) Steam MH at Minna St. STA 0+85** **Closed** **02/03/2011** **02/13/2011** **02/04/2011** **Potentially** ☐

From: Webcor Construction LP Nhi Tran **To:** Turner Construction Compan Michelle Smith **Answered By:** AECOM Technical Servic Eric Zagol

Co-Author:

REQUEST:

Reference Sheet U-3107 revised 12/27/10

The revised drawings show the Joint Trench alignment crossing through an existing old steam MH (Sta 0+85). The vault is a very large structure and extends to the north face of the curb of Minna St. Trinet believes that this vault is an abandoned structure.

Trinet requests direction for abandonment and/or demolition of this structure.

SUGGESTION:

ANSWER: **Accept Suggestion:** ☐

Steam MH at STA 0+75 has been abandoned by NRG Energy. Demolish as indicated on U-1107 (rev. 1 12/27/10) and in accordance with the contract documents.

Coordinate with Mike Eurkus (NRG Energy) at (415) 644-9668 through the TJPA's representative for the pick up of the salvaged steam MH ring and cover.

U-0095 **Utility Company Contacts** **Closed** **02/03/2011** **02/13/2011** **02/04/2011** **Potentially** ☐

From: Webcor Construction LP Nhi Tran **To:** Turner Construction Compan Michelle Smith **Answered By:** Turner Construction Comp Kevin Chiu

Co-Author:

REQUEST:

Reference Sheet U-0002 General Notes - Existing Utilities

Sheet U-0002 - EXISTING UTILITIES lists several phone numbers for contacting various utility companies in the city. M Squared has tried to contact most of these numbers and each one has had either no answer or is currently not in service.

M Squared requests a list of active phone numbers for the utility companies listed. An expedited response is necessary due to utilty conflicts.

SUGGESTION:

ANSWER: **Accept Suggestion:** ☐

"M Squared has tried to contact most of these numbers"

Please provide a list of the specific agencies that M Squared has tried to contact.

☐

Webcor/Obayashi Joint Venture

PROJECT MANAGEMENT - REQUEST AND ANSWERS LOG

30100 - Transbay Transit Center Project

Number	Subject	Status	Date Created	Date Required	Date Answered	Cost Impact	Proceed
U-0096	**PG&E Conflict with Sewer Installation at Natoma STA 9+50**	**Closed**	**02/09/2011**	**02/19/2011**	**02/14/2011**	**Yes**	

From: Webcor Construction LP Nhi Tran **To:** Turner Construction Compan Michelle Smith **Answered By:** Turner Construction Comp Kevin Chiu

Co-Author:

REQUEST:

Reference Sheet U-3012 and attached drawing

On 02/07/2011, M Squared encountered what appeared to be a live PG&E duct bank during their sewer installation excavation on Natoma Street STA 9+50. Due to this conflict, M Squared was unable to continue excavating for the sewer (See attachment). On 02/09/2011, M Squared's Superintendant met with a PG&E Representative and PG&E Representative confirmed that the duct bank is live and is not due to be decommissioned for at least 3 months.

In order for M Squared to continue with the sewer installation, M Squared is proposing to:
- install MH #305 and begin installing pipe west of MH #305
- perform a temporary connection from MH#305 to the existing 3' x 5' brick sewer

M Squared can then perform the remainder of the work once PG&E has decommissioned the duct bank.

M Squared estimates that the additional cost to perform the temporary tie-in would be approximately $4,500.

Please confirm how you would like M Squared to proceed. M Squared requests an expedited response as they are currently stopped work and awaiting a response.

SUGGESTION:

ANSWER: **Accept Suggestion:** ☐

02/14/2011 Kevin Chiu

See CR U-006 issued on 2/14/11

02/10/2011 Eric Zagol

Demolition and Construction Sequence shown on U-1112 and U-1120 lists per sequence order that the sewer work is to commence after PG&E has completed their Phase I work in Natoma and First St., all services cut over and existing duct bank is abandoned by PG&E. Given the fact that PG&E has experienced construction delays associated with their structures on First Street, the proposed sequence for sewer construction is acceptable.

Submit a temporary connection detail for review.

Coordinate with PG&E to abandon the existing 2-inch HP Gas along Natoma per U-1112 and U-1120 prior to demolition.

Coordinate with Verizon to abandon existing conduit (labeled "U" on base plans) prior to demolition per U-1112 and U-1120.

U-0096.1	**PGE Conflict with Sewer on Natoma at First Workaround**	**Closed**	**02/15/2011**	**02/25/2011**	**02/18/2011**	**Potentially**	☐

From: Webcor Construction LP Nhi Tran **To:** Turner Construction Compan Michelle Smith **Answered By:** AECOM Technical Servic Eric Zagol

Co-Author:

REQUEST:

Reference U-3012 and attached sketch

Per response to RFI#U-0096, M Squared has provided the attached connection detail.

Please confirm if it is acceptable to proceed

SUGGESTION:

ANSWER: **Accept Suggestion:** ☐

Proceed with the temporary connection per the M Squared connection detial.

Webcor/Obayashi Joint Venture

PROJECT MANAGEMENT - REQUEST AND ANSWERS LOG

30100 - Transbay Transit Center Project

Number	Subject	Status	Date Created	Date Required	Date Answered	Cost Impact	Proceed
U-0097	**PG&E Conflict with Sewer Instll on Natoma at First**	**Closed**	**02/10/2011**	**02/20/2011**	**02/14/2011**	**Potentially**	☐

From: Webcor Construction LP Nhi Tran **To:** Turner Construction Compan Michelle Smith **Answered By:** AECOM Technical Servic Eric Zagol

Co-Author:

REQUEST:

Reference Sheet U-3012

Following on from M Squared's RFI #U-0096, M Squared has confirmed in the field that there is a grade conflict between the proposed sewer and the existing electrical duct bank on Natoma between STA 9+30 to 9+50. The conflict is between the bottom of the electrical duct bank and the top of the new 24'' sewer pipe.

The elevation of bottom of electrical duct bank is 11.5'
The top of the 24'' VCP sewer is 11.82'

M Squared has also confirmed with PG&E that 3 of the 4 concrete encased conduits are occupied, 2 being occupied by 12KV lines. The duct bank is to be abandoned in the future but PG&E was unable to provide a schedule for this work.

Please advise M Squared on how to proceed.

SUGGESTION:

ANSWER: **Accept Suggestion:** ☐

Demolition and Construction Sequence shown on U-1112 and U-1120 lists per sequence order that the sewer work is to commence after PG&E has completed their Phase I work in Natoma and First St., all services cut over and existing duct bank is abandoned by PG&E.

Proceed per response to RFI U-0096.

U-0098	**Potholing at Blackrock**	**Closed**	**02/10/2011**	**02/20/2011**		**Potentially**	☐

From: Webcor Construction LP Nhi Tran **To:** Turner Construction Compan Michelle Smith **Answered By:**

Co-Author:

REQUEST:

M Squared is planning to pothole next week at Howard STA 9+40, First St STA 1+50 and First St STA 2+10 to confirm the alignment and depths of the new 12'' water main on First St. from Howard to Natoma.

Guy Hollins from TJPA has advised M Squared that Blackrock is requesting additional potholing in the off-hours to determine locations of AT&T facilities in the area.

Please provide M Squared information regarding the locations of the addtional potholes requested, including the requested depths and sizes.

SUGGESTION:

ANSWER: **Accept Suggestion:** ☐

U-0099	**Returned Submittal Comments**	**Closed**	**02/16/2011**	**02/26/2011**	**03/11/2011**	**Potentially**	☐

From: Webcor Construction LP David Hungerford **To:** Turner Construction Compan Michelle Smith **Answered By:** Turner Construction Comp Kevin Chiu

Number	Subject	Status	Date Created	Date Required	Date Answered	Cost Impact	Proceed

Co-Author:

REQUEST:

Ref Spec section 01 13 10

According to the Action and Distribution (section 1.11) of the submittal specifications, Submittals shall be returned indicating one of the following:

No Exceptions Taken
Make Corrections Noted
Revise and Resubmit
Rejected

We have received submittals back as "Not Reviewed" or "For Record Only". Please confirm these responses are acceptable and should be incorporated into the specifications.

SUGGESTION:

VOID - See RFI #T-0051

ANSWER: **Accept Suggestion:** ☐

See RFI T-0051, Returned Submittal Comment, for response.

U-0100 **Minna St MH#207 Proposed Relocation** **Closed** **02/18/2011** **02/28/2011** **02/22/2011** **No** ☐

From: Webcor Construction LP Nhi Tran **To:** Turner Construction Compan Michelle Smith **Answered By:** AECOM Technical Servic Eric Zagol

Co-Author:

REQUEST:

Reference Revised Sheet U-3009 and attached sketches

The current location of MH#207 at STA 9+25.87 will place a cap on the existing water main (installed by SFWD on 02/17/2011) in Trinet's excavation. Trinet is concerned that the old water main may not be adequately restrained and could create a dangerous condition for their excavation for MH#207. Trinet proposes to move MH#207 4 feet west to STA 9+21.87 +/-, as shown in the attached sketch, so that the cap is outside of Trinet's MH excavation. The revised invert elevation for the new MH location is shown on the attached sketch.

Please confirm if this is acceptable,

SUGGESTION:

ANSWER: **Accept Suggestion:** ☐

Proposed design change is acceptable.

AECOM suggests no change to contract price for this modification.

U-0101 **First St CB#501 Conflict with Existing Utilities** **Closed** **02/22/2011** **03/04/2011** **02/28/2011** **Yes** ☐

From: Webcor Construction LP Nhi Tran **To:** Turner Construction Compan Michelle Smith **Answered By:** Turner Construction Comp Daphne Faulkner

Number	Subject	Status	Date Created	Date Required	Date Answered	Cost Impact	Proceed

Co-Author:

REQUEST:

Reference Sheet U-3021, attached sketch, and USA ticket

During excavation for CB#501, Trinet encountered what appears to be a PG&E vault (shown in plans as EMH 7712), PG&E Duct (Shown in plans as 1- 2" & 4-6" EP), 2-2" steel conduits (not shown in plans), and a concrete shoring wall (not shown in plans).

- The 2-2" steel pipe is in conflict with Trinet's installation of CB#501, and will need to be relocated or abandoned to facilitate the installation of the catch basin. Trinet has done their due diligence (2nd and 3rd No Response follow ups) and these lines were not marked by the owner through USA (attached). Trinet requests direction on the relocation/abandonment of these utilities.

- Trinet proposes to move CB#501 two-feet north to avoid the conflict with the existing EMH 7712. Please advise if this is acceptable.

SUGGESTION:

ANSWER: **Accept Suggestion:** ☐

Pending approval by the TJPA, a deductive CR will be issued.

02/28/2011 - Eric Zagol

Following AECOM's review of the Transbay Transit Center Project 50% construction documents (rev. 12/20/10), further review of the Existing Terminal Ramps & Demolition Plans Project construction documents, and AECOM's understanding of the demolition of the existing Terminal "hump" structure and the timing of such demolition, CB#501 is no longer required.

Delete catch basin #501 and associated 10-inch sewer lateral.

Number	Subject	Status	Date Created	Date Required	Date Answered	Cost Impact	Proceed
U-0102	**First St. CB#206 in Conflict with (E) Subsurface Conc. Structure / Duct Bank**	**Closed**	**02/23/2011**	**03/05/2011**	**03/04/2011**	**Potentially**	☐

From: Webcor Construction LP Nhi Tran **To:** Turner Construction Compan Michelle Smith **Answered By:** Turner Construction Comp Daphne Faulkner

Co-Author:

REQUEST:

Reference Sheet U-3009 and attached sketch and photo

During Trinet's excavation for replacement of CB#206 on the northwest corner of First St. and Minna St. (at STA 9+31), they encountered a concrete subsurface structure or concrete encased duct bank not indicated on the contract drawings. The existing catch basin is approximately 30in deep and is constructed on top of the existing concrete structure/duct bank (see attached drawing).

Trinet requests direction on the demolition of the existing catch basin and the installation of the new catch basin CB#206.

SUGGESTION:

ANSWER: **Accept Suggestion:** ☐

Pending approval by the TJPA, a deductive CR will be issued.

03/04/2011 - Eric Zagol

As determined during a site visit on 3/3/11 with Trinet, AECOM and W/O; existing unforeseen conditions including an abandoned sub-sidewalk basement wall along Minna Street, an active sub-sidewalk basement wall for the 100 First St. property, and an abandoned telecommunications concrete duct along First Street create a situation where the installation of a new catch basin would require an extensive amount of unforeseen demotion.

Number	Subject	Status	Date Created	Date Required	Date Answered	Cost Impact	Proceed

In lieu of installing a new catch basin barrel to replace existing modify the existing catch basin as follows:

Clean interior walls and bottom.
Apply 1/2-inch think uniform layer of mortar on interior walls and bottom.
Install cast iron trap.
Install pipe culvert and connect to MH#207 as shown in Plans. New culvert size and invert shall match existing culvert at catch basin. Use ductile iron pipe if depth of cover is less than 3 feet.

U-0102.1 **Catch Basin #206 redesign** **Closed** **04/01/2011** **04/11/2011** **04/13/2011** **Potentially** ☐

From: Webcor Construction LP Colin Azevedo **To:** Turner Construction Compan Michelle Smith **Answered By:** AECOM Technical Servic Eric Zagol

Co-Author:

REQUEST:

Please clarify the following items relating to the re-design of CB#206:

1) The only specification section addressing mortar coating is in 33 31 10 Paragraph 2.1.I, which specifies a "Wet Spray Mortar" application. This process would be cost prohibitive for coating only one catch basin. Trinet proposes the use of "SikaTop 123 Plus" mortar - product data sheets are attached. Please advise if this product is acceptable or specify an alternate material.

2) The RFI response directs Trinet to use ductile iron pipe for culvert runs with less that 3' of cover. If 22.5% DI bends are required to construct the culverts Trinet would prefer to use Mechanical Joint Fittings. Please advise if these are acceptable.

SUGGESTION:

Eric Zagol 4/12/2011: 1) SikaTop 123 Plus mortar is acceptable. 2) MJ DIP for 22.5 degree fittings is acceptable for culvert runs with less than 3 feet of cover.

ANSWER: **Accept Suggestion:** ☐

U-0103 **Natoma St. 4in Water Line Conflict with MH#306** **Closed** **02/24/2011** **03/07/2011** **02/24/2011** **Potentially** ☐

From: Webcor Construction LP Nhi Tran **To:** Turner Construction Compan Michelle Smith **Answered By:** AECOM Technical Servic Eric Zagol

Co-Author:

REQUEST: **SUGGESTION:** **ANSWER:** **Accept Suggestion:** ☐

Webcor/Obayashi Joint Venture

PROJECT MANAGEMENT - REQUEST AND ANSWERS LOG

30100 - Transbay Transit Center Project

Number	Subject	Status	Date Created	Date Required	Date Answered	Cost Impact	Proceed

Reference Sheet U-1113 and U-3113

A 4-inch water line runs from east to west on the south side of Natoma from Sta 9+40 to Sta 10+95. At Sta 10+95, the 4-in water line 90degrees into the building at 400 Howard St. This building however, appears to be fed from the existing 8-inch line on 1st St between Howard and Natoma.

Is this 4-inch water lateral at Sta 10+95 on Natoma already abandoned? If not, can M Squared abandon it? It is currently in conflict with the proposed location of MH#306, and is also in conflict with the excavation and shoring for the new 30-inch sewer along Natoma (TG04.1).

It is AECOM's understanding that the existing 4-inch lateral is "killed" (not supplying water) however the "killed" lateral may still be pressurized up to the lateral terminal point at the gate valves located on the south side of Natoma Street at Natoma Street STA 10+95.

Demolish 4-inch water as indicated on U-1112, U-1113 and U-1120.

Prior to demolition:

1. Coordinate with SFPUC inspector to confirm 4-inch lateral is "killed".
2. Coordinate with SFPUC inspector to confirm that the lateral is not pressurized and that the 4-inch gate valve at Natoma Street STA 9+40 (intersection with existing First Street 8-inch water main) is closed.
3. Coordinate with SFPUC inspector and install cap in First Street as shown on U-1120 at Natoma STA 9+55 +/-.

U-0104 **Natoma St. Temporary Sewer Connections at Sta 9+25 and Sta 7+20** **Closed** **02/24/2011** **03/06/2011** **03/01/2011** **Yes** ☐

From: Webcor Construction LP Nhi Tran **To:** Turner Construction Compan Michelle Smith **Answered By:** AECOM Technical Servic Eric Zagol

Co-Author:

REQUEST:

Reference Sheets U-1112, U-1120, U-3012, and RFI#U-0096

In order for M Squared to install the new water main on Natoma Street between Sta 6+40 to Sta 10+00, the existing 3'x5' sewer must first be demolished. The 3'x5' sewer cannot be demolished until the new 24-inch VCP has been installed and connected to the existing sewer on First Street at Sta 9+59. Per sheets U-1112 and U-1120, the new 24-inch sewer is to be constructed after the demolition of the PG&E ducts. However, demolition of the PG&E ducts cannot be completed because PG&E has not completed their relocation work

Per RFI#U-0096 (M Squared RFI #009), as confirmed by

SUGGESTION:

ANSWER: **Accept Suggestion:** ☐

Due to existing PG&E duct in conflict caused by PG&E's delay with First St. Phase I relocations, the two 12-inch temporary HDPE connections as proposed are acceptable as an interim condition until PG&E Phase I work is complete and the existing duct in conflict can be demolished per plans.

Daphne Faulkner - Pending approval by the TJPA, a CR will be issued.

Number	Subject	Status	Date Created	Date Required	Date Answered	Cost Impact	Proceed

PG&E in the field on 02/09/2011, there is a live PG&E duct bank in conflict with MH#305 and the new 24-inch VCP between MH#305 and MH#306, and not due to be decommissioned for at least three months.

M Squared proposes to install a 12-inch HDPE pipe from Sta 9+25 to Sta 9+59, and perform a temporary connection to the existing 3'x5' sewer on First Street. Surveys carried out on the electric duct bank at Sta 9+30 on 02/08/11 shows that the bottom of the Duct Bank is approx. 10.8, meaning a 12-inch pipe will fit. In addition, M Squared proposes to perform a temporary connection (also 12-inch HDPE) at Sta 7+20 from the new MH#303 to the existing 3'x5' sewer. This would allow M Squared to demolish the 3'x5' sewer from Sta 7+02 to Sta 9+59, and allow M Squared to install the water from Sta 6+40 to Sta 10+00.

M Squared estimates the cost for both of these connections is $20,000.

An expedited response is required to avoid impact to the installation of the water line

---

U-0105	Natoma St Duct Bank Conflict at Sta 12+92	Closed	02/24/2011	03/06/2011	03/01/2011	Yes	☐

From: Webcor Construction LP Nhi Tran **To:** Turner Construction Compan Michelle Smith **Answered By:** AECOM Technical Servic Eric Zagol

Co-Author:

REQUEST:

Reference Sheet U-1113, U-1122, U-3013 and attached drawing

A pothole on Natoma Street at Sta 12+92 confirmed that the duct bank shown on Sheet U-3013 is in conflict with the proposed 30-inch VCP sewer (see attached drawing).

Per sheets U-1122 and U-1113, the new 30-inch sewer is to be constructed after the demolition of the PG&E ducts. However, demolition of the PG&E ducts cannot be completed because PG&E has not completed their relocation work. Per PG&E's new schedule this work is not scheduled to be completed until 06/31/2011. This would

SUGGESTION:

ANSWER: **Accept Suggestion:** ☐

Due to existing PG&E duct in conflict caused by PG&E's delay with Fremont St. Phase I relocations, the12-inch temporary HDPE connection as proposed is acceptable as an interim condition until PG&E Phase I work is complete and the existing duct in conflict can be demolished per plans.

Daphne Faulkner - Pending approval by the TJPA, a CR will be issued.

Number	Subject	Status	Date Created	Date Required	Date Answered	Cost Impact	Proceed

mean M Squared's work cannot start until after this.

In order for M Squared to continue with their work, M Squared proposes the use of 12-inch HDPE pipe from Sta 12+80 to existing sewer at Sta 13+15 (proposed location of MH#602). Once PG&E has completed their cutovers and the duct bank is abandoned, M Squared will demo the duct bank per specifications and complete the installation of the 30-inch VCP sewer from Sta 12+80 to MH#602.

M Squared estimates the cost for this work is $15,000.

An expedited response is required to avoid impact to the installation of the sewer and water line

---

U-0106 **First St Sewer MH#502 Adjustment to Avoid Conflict w/ (E) PG&E Duct** **Closed** **02/25/2011** **03/07/2011** **02/28/2011** **Potentially** ☐

From: Webcor Construction LP Nhi Tran **To:** Turner Construction Compan Michelle Smith **Answered By:** AECOM Technical Servic Eric Zagol

Co-Author:

REQUEST:

Reference Sheet U-3021 and attached sketch

In order for Trinet to avoid a conflict with the existing PG&E duct along the west wall of their excavation, Trinet adjusted the south end of the MH#502 structure by 7 inches to the east (as shown in attached sketch). MH#502 is still aligned to incorporate the connection to the existing brick sewer, and the alignment of the new 24-inch VCP run is unaffected by this change. Trinet will adjust rebar as required to maintain the required spacing and clearances.

Please confirm if the adjustment of MH#502 is acceptable.

SUGGESTION:

ANSWER: **Accept Suggestion:** ☐

The sketch referenced above is based on CCSF DPW Standard #87,184 that shows the minimum reinforcing plan for the connection to the existing 3'x5' brick sewer. Provide reinforcing for connection to 3'x5' per CCSF DPW Standard.

Confirm that the manhole is being constructed per CCSF DPW Standard #87,182 as shown in Detail 10 on U-5001.

Provide width of west wall and location of reinforcing steel at 3'x5' brick sewer connection and 24-inch VCP sewer connection for review.

U-0107 **AWSS Cap Permit Requirements** **Closed** **02/25/2011** **03/07/2011** **02/28/2011** **Potentially** ☐

From: Webcor Construction LP Nhi Tran **To:** Turner Construction Compan Michelle Smith **Answered By:** AECOM Technical Servic Eric Zagol

Co-Author:

REQUEST:

SUGGESTION:

ANSWER: **Accept Suggestion:** ☐

Number	Subject	Status	Date Created	Date Required	Date Answered	Cost Impact	Proceed

W/O would like to confirm that other than any standard permits required for any excavation in the city of San Francisco, there is no additional permit required by any city agency in order to perform work on the AWSS caps.

Per discussions with Michael Smith SFDPW BOE, there are no additional permits required for AWSS construction beyond the standard permits for constructing utilities within the public right-of-way.

Notify CCSF SFFD and SFPUC/SFWD through the TJPA's representative in advance the work to isolate work areas.

U-0108 **FH Relocation on Beale St** **Closed** **02/25/2011** **03/07/2011** **02/28/2011** **Potentially** ☐

From: Webcor Construction LP Nhi Tran **To:** Turner Construction Compan Michelle Smith **Answered By:** AECOM Technical Servic Eric Zagol

Co-Author:

REQUEST:

Reference sheet U-3124 and attached photo

See the photo attached. The proposed location for the FH on Beale St at ~Sta 2+20 is in between a driveway for a parking garage and a driveway for a loading dock. Per discussions with Eric Zagol, please confirm the FH is to be relocated to the East side of Beale St as highlighted by the green line on the attached drawing.

Please advise.

SUGGESTION:

ANSWER: **Accept Suggestion:** ☐

Construct FH lateral and FH on the East side of Beale Street at STA 2+04 as shown on SK-U-0008 attached.

U-0109 **First St Sewer Grade Change To Conform to Existing 3'x5' Brick Sewer** **Closed** **03/02/2011** **03/14/2011** **03/03/2011** **Potentially** ☐

From: Webcor Construction LP Nhi Tran **To:** Turner Construction Compan Michelle Smith **Answered By:** AECOM Technical Servic Eric Zagol

Co-Author:

REQUEST:

Reference Sheet U-3021, U-3009, and attached sketch

This RFI confirms modification discussed in the field by Trinet and discussed with the Design Engineer, SFDPW, and W/O personnel. Trinet's field survey shows the existing 3'x5' brick sewer on First Street to be approximately 11-inches lower than the grade depicted on the drawings. Trinet also checked the elevation of the existing SSMH (10-feet north of MH#501) and confirmed

SUGGESTION:

ANSWER: **Accept Suggestion:** ☐

Construct MH#502 at First St. STA 4+98 as shown on U-3021 to match the invert elevation of the existing 3'x5' brick sewer, elevation 6.77 as determined in the field by contractor.

Construct MH#501 at First St. STA 4+45 as shown on U-3021 with an invert elevation of 7.58 as determined by contractor.

Number	Subject	Status	Date Created	Date Required	Date Answered	Cost Impact	Proceed

that it is approximately 11-inches lower than what is shown on the drawings. Trinet installed MH#502 with invert elevation at 6.77 to match the existing brick sewer at the connection point. The new 24-inch VCP is being installed 11-inches lower than what is shown on the drawings maintaining the design slope of 0.0062. MH#501 will be installed with the invert elevation of 7.58, as shown in the attached sketch.

Please confirm that this design is acceptable. Also, please provide a revised grade for the 24-inch VCP run from MH#207 (Minna St.) to MH#501.

Construct MH#207 per RFI-U100.

Construct the 24-inch VCP sewer from MH#207 (invert elevation 8.67 per RFI U-0100) at a continuous downward slope such that the invert elevation of the 24-inch VCP at MH#501 matches the invert elevation of MH#501 at elevation 7.58.

Based on discussions with Trinet in the field, Trinet reported 11-inches of sediment/sludge/dirt in the existing 3'x5' brick sewer. Please confirm that existing sewer in First Street was cleaned with high velocity hydro cleaning equipment per specification section 33 31 10 3.2 A prior to excavation.

U-0110 **Joint Preconstruction Survey Requirement** **Closed** **03/02/2011** **03/12/2011** **03/03/2011** **Potentially** ☐

From: Webcor Construction LP Nhi Tran **To:** Turner Construction Compan Michelle Smith **Answered By:** Transbay PMPC Derrick Cooper

Co-Author:

REQUEST:

Reference Specification Section 01 15 40, 1.5

Singer has been coordinating W/O access to the adjacent properties for W/O's subcontractors to complete their Joint Pre-Construction survey (Spec. 01 15 40, 1.5). Singer has informed W/O that they were instructed by TJPA Representatives to stop scheduling the joint surveys because TJPA will be conducting one overall survey, instead of having each individual contractor do them.

The surveys are a specification requirement for current and future subcontractors. Please clarify this specification, moving foward.

SUGGESTION:

ANSWER: **Accept Suggestion:** ☐

TJPA will be conducting perconstruction surveys of adjacent property interiors. Singer will not be scheduling these surveys for W/O subcontractors.

U-0111 **Minna St. Joint Trench Conflict with (E) 8" elbow and thrust block** **Closed** **03/04/2011** **03/14/2011** **03/09/2011** **Potentially** ☐

From: Webcor Construction LP Nhi Tran **To:** Turner Construction Compan Michelle Smith **Answered By:** AECOM Technical Servic Eric Zagol

Co-Author:

REQUEST:

SUGGESTION:

ANSWER: **Accept Suggestion:** ☐

Webcor/Obayashi Joint Venture

PROJECT MANAGEMENT - REQUEST AND ANSWERS LOG

30100 - Transbay Transit Center Project

Number	Subject	Status	Date Created	Date Required	Date Answered	Cost Impact	Proceed

Reference drawing sheet U-3409 and attached sketch.

During our excavation for the joint trench on the east end of Minna St. (STA 9+29) Trinet encountered the (E) 8" water main in Trinet's trench line, approximately 1 foot from our termination point. The existing alignment is different from what is shown in the contract drawings. The drawings do not show the water line crossing the joint tranch. The alignment and grade of the water main changed in Trinet's excavation to avoid the adjacent catch basin. A 22.5 degree elbow is located in the center of the joint trench excavation. The elbow is rolled up to accommodate the grade change and there is a thrust block under the footing. Trinet does not believe that it would be safe to excavate under the water main for Trinet's duct bank without having the line shutoff. Extending the PG&E ducts to FOC will also place the connection point for PG&E's extension of the duct bank directly under the water main fittings and elbows. There is adequate clearance to install the 4" gas line above the water main and extend it out to FOC per contract. The top of the water main is 49" below FG at the south side of the joint trench, at the location of the ags line.

Trinet propses to terminate the concrete encased duct bank approximately 5 ft. back from FOC. This would allow adequate room for Trinet to mandrel the ducts after the joint trench is installed without undermining the water main. PG&E could then extend their duct bank under the water main to connect to Trinet's water main. Please advise.

Per request to Jason Dunne (W/O) via email on 3/4/11 please provide the following information for review:

Horizontal (from a known point i.e. FOC along First St.) and vertical location of "top of water main".
Horizontal (from a known point i.e. FOC along First St.) and vertical location of water line at "22.5 degree elbow".
Determine if the water main is mechanically restrained with tie rods at each bend in questions.
Approximate size of existing concrete thurst block a the "22.5 degree elbow".

U-0111.1 | **Minna St Joint Trench Conflict @ Existing Water Line Elbow** | **Closed** | **04/18/2011** | **04/28/2011** | **04/21/2011** | **Potentially** ☐

From: Webcor Construction LP Colin Azevedo **To:** Turner Construction Compan Michelle Smith **Answered By:** AECOM Technical Servic Eric Zagol

Co-Author:

REQUEST:

Please find the attached as built drawing of the Joint Trench @ the intersection of Minna St. and First St. where the (E) 8" W main elbow was encountered.

SUGGESTION:

ANSWER: **Accept Suggestion:** ☐

Eric Zagol 4/20/2011: Please provide the information requested in RFI U-0111 response or confirm that the existing water line referenced in RFI U-0111 is mechanically restrained.

Number	Subject	Status	Date Created	Date Required	Date Answered	Cost Impact	Proceed

Construct Joint Trench to limit as indicated in Plans.

Refer to ASI-005 for the Joint Trench extension into First Street.

U-0111.2 **Minna St Joint Trench Conflict @ Existing Water Line Elbow** **Closed** **04/25/2011** **05/05/2011** **04/28/2011** **Potentially** ☐

From: Webcor Construction LP Colin Azevedo **To:** Turner Construction Compan Gary Krutsch **Answered By:** AECOM Technical Servic Eric Zagol

Co-Author:

REQUEST:

Eric Zagol 4/20/2011: Please provide the information requested in RFI U-0111 response or confirm that the existing water line referenced in RFI U-0111 is mechanically restrained.

Answer: The waterline is mechanically restrained.

SUGGESTION:

ANSWER: **Accept Suggestion:** ☐

Eric Zagol 4/26/2011 Proceed pre RFI U-0111.1 response.

U-0112 **Minna St. Joint Trench, AT&T Vault and Conduit Configuration** **Closed** **03/08/2011** **03/18/2011** **03/15/2011** **Potentially** ☐

From: Webcor Construction LP Nhi Tran **To:** Turner Construction Compan Michelle Smith **Answered By:** AECOM Technical Servic Eric Zagol

Co-Author:

REQUEST:

Reference Sheet U-3408

At the 02/03/2011 Joint Trench Pre-Construction meeting and field walk through, the AT&T inspector expressed concern with the configuration of the AT&T ducts connecting to the AT&T vault at Sta 3+71. The AT&T inspector was specifically concerned with the east side of the vault where all eight 4-inch ducts are shown entering the vault on the one side (north side) of the center line.

Trinet would like AT&T to review the duct configuration connection to the vault as depicted in the contract drawings and provide a revised drawing if they wish to make a change.

SUGGESTION:

ANSWER: **Accept Suggestion:** ☐

AT&T has reviewed the information and has proposed revisions to the Joint Trench to accommodate the following:

1. Revised information from AT&T regarding 555 Mission St. service point of connection, and
2. AT&T preferred Minna St. AT&T vault conduit penetration locations

Attached SK-U-0009 is a markup of the AT&T Vault at STA 3+71 butterfly drawing indicating conduit penetrations and schematic diagram of conduit alignments. Revised Minna St. Joint Trench Plans are being prepared as part of ASI#3 to address these revisions as well as changes associated with RFI U-0088.

Webcor/Obayashi Joint Venture

PROJECT MANAGEMENT - REQUEST AND ANSWERS LOG

30100 - Transbay Transit Center Project

Number	Subject	Status	Date Created	Date Required	Date Answered	Cost Impact	Proceed
U-0113	**AWSS Cap on First St. at Howard**	**Closed**	**03/08/2011**	**03/18/2011**	**03/10/2011**	**Potentially**	☐

From: Webcor Construction LP Nhi Tran **To:** Turner Construction Compan Michelle Smith **Answered By:** AECOM Technical Servic Eric Zagol

Co-Author:

REQUEST:

Reference Drawing No. AWSS MA-5

On 03/08/2011, M Squared excavated and exposed the existing AWSS line and gate valve on First St. at Howard. Upon inspection of the existing gate valve, it appears that the gate valve does not have lugs on it. This means that M Squared cannot tie back the proposed 10-inch AWSS cap on the AWSS line.

Please advise on how you would like M Squared to proceed with the cap installation. An expedited response is requested.

SUGGESTION:

ANSWER: **Accept Suggestion:** ☐

Michael Smith (SFDPW BOE), AWSS Engineer of record, will provide response directly to PMPC/Turner.

03/10/2011 - Daphne Faulkner

Michael Smith (SFDPW BOE), AWSS Engineer of record provided response via email dated 3/9/11. See attached email, RFI response and AWSS Standard Dwg. III.

U-0113.1	**AWSS Strong Backs**	**Closed**	**03/17/2011**	**03/27/2011**	**03/22/2011**	**Potentially**	☐

From: Webcor Construction LP Nhi Tran **To:** Turner Construction Compan Michelle Smith **Answered By:** Turner Construction Comp Kevin Chiu

Co-Author:

REQUEST:

Reference RFI #U-0113

On 3/16/2011, M Squared met with Dan Helminiak from SFWD and Michael Smith from BOE to proceed with the AWSS Cap work at First & Howard. As directed in the response to RFI#U-0013, M Squared installed the strong back provided to them. After the strong back was installed, Dan H. and Michael S. determined that the strong backs would not work due to the diameter of the existing valve bell.

M Squared requests direction on how to proceed.

SUGGESTION:

ANSWER: **Accept Suggestion:** ☐

See attached file, "RFI U-0113.1 1490J Phase I First Street RFI No. 113.1 BOE Response 03 22 11," dated 03/22/11 for handwritten response per Michael Smith of SFDPW/BOE/Mechanical. Response below was copied into CW:

"- Proceed with installation without strong back and tie rods.

- A minimum of 100' of out-of-service AWSS main north of cap at First/Howard streets, and south of cap at Mission/First streets shall remain-in-place.

- Additionally the specified concrete thrust block shall be increased by 3 times the volume and encompass the existing abandoned-in-place line for a distance of 4' downstream of steel plate.

- Strong backs (2) shall be returned to CCSF."

Number	Subject	Status	Date Created	Date Required	Date Answered	Cost Impact	Proceed
U-0114	**PG&E Abandonment Schedule for Natoma St. at Second St.**	**Closed**	**03/09/2011**	**03/19/2011**	**05/07/2011**	**Potentially**	☐

From: Webcor Construction LP Nhi Tran **To:** Turner Construction Compan Gary Krutsch **Answered By:** AECOM Technical Servic Eric Zagol

Co-Author:

REQUEST:

Reference Sheet U-1110 and U-2010

On 03/04/2011, M Squared met with a PG&E representative on site at Natoma and 2nd Street. The PG&E representative confirmed that none of their utilities had been abandoned in the area, and that the PG&E representative would be unable to provide a schedule for this abandonment.

Per note 2 on sheet U-1110, the services for 77 Natoma and 83 Natoma were to be terminated by Feb 2011. To date, this work does not appear to be completed.
In PG&E's letter to the TJPA regarding their schedule, there is no reference to work on Natoma Street at 2nd St.

M Squared is unable to proceed with their sewer and water utility installation on Natoma St. west of shoring wall until PG&E has completed abandonment of their existing utilities.

Please provide M Squared with an updated schedule for all PG&E's termination/abandonment work at 2nd and Natoma St.

SUGGESTION:

ANSWER: **Accept Suggestion:** ☐

Eric Zagol 3/18/2011 ***5/5/11 UPDATE***

77 Natoma and 83 Natoma services have been terminated, refer to USR Nos. 11 and 13 as executed by W/O, Turner and PG&E on 4/21/11.

As of 5/4/11, PG&E estimates that Natoma Street will be de-energized by 5/21/11. Coordinate USRs for the remaining electric ducts with Turner and PG&E.

3/18/11 RESPONSE

Per demolition and construction sequencing shown on sheet U-1110, water and sewer work shall commence after PG&E has completed their Phase I relocations in First St., Natoma St. and existing electric ducts are abandoned by PG&E.

PG&E services to 77 Natoma and 83 Natoma have been terminated as part of the Existing Terminal & Ramps Demolition Project. USRs for these services are currently being prepared by the TJPA's Representative (Turner). The USRs shall indicate the service conduits and cables that are abandoned subject to demolition as indicated in sheet U-1110.

To facilitate schedule, AECOM has requested PG&E to de-energize Natoma St. to the extent possible in an effort to re-sequence construction of the sewer. PG&E's response and schedule of abandonment is forthcoming.

As shown on U-3110 the water line could be constructed prior to PG&E abandoning their facilities. Pothole to confirm the water line can be constructed as shown on U-3110.

U-0115	**AWSS Cap Work Sequence on First St**	**Closed**	**03/07/2011**	**03/17/2011**	**03/15/2011**	**Yes**	☐

From: Webcor Construction LP Nhi Tran **To:** **Answered By:**

Number	Subject	Status	Date Created	Date Required	Date Answered	Cost Impact	Proceed

Turner Construction Compan Michelle Smith — Turner Construction Comp Kevin Chiu

Co-Author:

REQUEST:

Refer to Sheets MA-5, MA-8

There are two caps that are required to be installed in order to shutdown the AWSS service on First St between Mission to Howard St. Per the construction schedule, both caps were supposed to be worked on simultaneously. Please confirm per a conversation in the field on 03/07/2011 with inspectors Michael Smith (SFDPW) and Dan Helminak (DPW), only one AWSS cap can be installed at a time.

SUGGESTION:

ANSWER: **Accept Suggestion:** ☐

The below response was copied into Constructware on behalf of Michael B. Smith SFDPW/BOE/Mechanical (see attached, "RFI U-0115 1490J Phase I First Street BOE Response 03 11 11")

"Installing/capping of the AWSS lines at two locations in sequence instead of simultaneously was a decision made by the SFWD/CCD together with SFFD. Please contact Dan Helminiak of SFWD/CDD at (415) 420-4821 for further information" - Michael B. Smith SFDPW/BOE/Mechanical dated 03/11/2011

03/14/2011 - Eric Zagol

Michael Smith from SFDPW BOE will respond to this RFI.

U-0116	Abandoned 6" Fire Water Service Thru 100 First St Basement Wall	Closed	03/18/2011	03/28/2011	03/21/2011	Potentially ☐

From: Webcor Construction LP Nhi Tran — **To:** Turner Construction Compan Michelle Smith — **Answered By:** AECOM Technical Servic Eric Zagol

Co-Author:

REQUEST:

Refer to sheets U-1109 and U-3109

An abandoned existing 6" fire water service lateral was discovered while demolishing the old 8" water main running down Minna St. The 6" fire water service lateral was not shown on the plans and there were no existing water valve covers to indicate the existence of this line. The abandoned lateral penetrates the foundation wall entering the basement to 100 First St at Station 7+36.

Please provide direction for plugging the void that will be left after 100 First St management removes the 6" water lateral pipe. A roughly 1ft x ft x 1ft deep square opening will remain after the fire water lateral pipe is removed.

SUGGESTION:

ANSWER: **Accept Suggestion:** ☐

Contractor had knowledge of existing abandoned 6-inch fire water service at STA ~7+35.

Existing abandoned 6-inch fire water service at STA ~7+36 was exposed and potholed by Trinet on 11/19/2010 and included in Submittal TG0405-024 Item No: UA0000-020630A01.0 as Pot Hole No. 29.

Cut and plug abandoned 6-inch fire water service in accordance with specification section 02 41 00 3.6 at face of curb along the North side of Minna St.

Please clarify why private property improvements are being requested.

Webcor/Obayashi Joint Venture

PROJECT MANAGEMENT - REQUEST AND ANSWERS LOG

30100 - Transbay Transit Center Project

Number	Subject	Status	Date Created	Date Required	Date Answered	Cost Impact	Proceed
U-0117	**Natoma St. Future Hydrant Location at Sta 11+79**	**Closed**	**03/21/2011**	**03/31/2011**	**03/24/2011**	**Potentially**	☐

From: Webcor Construction LP Nhi Tran **To:** Turner Construction Compan Michelle Smith **Answered By:** AECOM Technical Servic Eric Zagol

Co-Author:

REQUEST:

Reference Sheet U-3113

Sheet U-3113 shows an 8in x 8in x 6in tee in the new 8-inch water main on Natoma at Sta 11+79. The note on the drawing makes reference to it being used as a future location for a fire hydrant. Sta 11+79 is in front of a loading dock and parking garage on Natoma Street.

Please confirm that it is intended for M Squared to install the tee in the water main line at this location.

SUGGESTION:

ANSWER: **Accept Suggestion:** ☐

As discussed in the field on 3/21/11 with Noel (M Squared) and Dan Helminiack (SFWD), construct tee for future fire hydrant and lateral connection at STA 11+37 (4 ft min. west of existing street light).

U-0118	**Minna Street Joint Trench, PG&E Duct Routing and Termination Points**	**Closed**	**03/24/2011**	**04/03/2011**	**04/06/2011**	**Potentially**	☐

From: Webcor/Obayashi Joint Venture Colin Azevedo **To:** Turner Construction Compan Michelle Smith **Answered By:** AECOM Technical Servic Eric Zagol

Co-Author:

REQUEST:

Please provide a routing drawing or written clairification of the routing for the PG&E Duct stub-outs in the Minna St. Joint Trench, between First St. and Second St. It is not clear from the plans in all cases where all the ducts extending from stub-outs terminate. Please expedite.

SUGGESTION:

ANSWER: **Accept Suggestion:** ☐

Please see the attached sketches clarifying where the ducts extending from stub-outs terminate (/originate).

Please note that the 2-2" conduits shown on U-3410 sections C, D, F and G terminate at "stub out reference A".

U-0119	**Minna St. JT_ AT&T Reconfiguration and impact on (E) trees**	**Closed**	**03/25/2011**	**04/04/2011**	**03/30/2011**	**Potentially**	☐

From: Webcor Construction LP Colin Azevedo **To:** Turner Construction Compan Michelle Smith **Answered By:** AECOM Technical Servic Eric Zagol

Co-Author:

REQUEST:

The revised drawings for the Joint Trench alignment dated 3/16/2011 show the reconfigured AT&T ducts running through an existing tree well on the east side of the AT&T vault at Stn. 3+71. RFI U-0112 (Minna St, Joint Trench, AT&T Vault and Conduit Configuration) also shows the reconfigured AT&T ducts running through an existing tree well on the east side of the vault. This conduit layout in consistent with discussions with the AT&T inspector in the field was reflected in the shop drawings. The revised

SUGGESTION:

ANSWER: **Accept Suggestion:** ☐

Per discussions on site on 3/28/11 with Jack Kelliher (Trinet), Dave Olsen (AT&T), Dave Gibbons (AT&T) and Colin Azevedo (W/O), provide a 22.5 bend at conduit penetration for the 2-4" conduits on the south side of the east to avoid direct conflict. Remove tree grate and frame as required to construct conduit. Restore tree grate, fame, sidewalk curb and gutter. Protect tree and existing irrigation pipes in place.

Number	Subject	Status	Date Created	Date Required	Date Answered	Cost Impact	Proceed

drawings do not address relocation and/or removal of the impacted trees and the related irrigation changes. Please review and advise.

U-0120 **MH601 Locatio** **Closed** **03/28/2011** **04/07/2011** **04/05/2011** **Potentially** ☐

From: Webcor Construction LP Colin Azevedo **To:** Turner Construction Compan Michelle Smith **Answered By:** AECOM Technical Servic Eric Zagol

Co-Author:

REQUEST:

Sheet U-3022 shows MH601 @ Sta 0+70 on Fremont Street. This location is also in the middle of the crosswalk on Fremont Street. USA markings show the existing traffic signal conduits crossing thru the center of the manhole. By moving the manhole approx 8¿ north the conflict with the traffic signal conduits would be avoided and it would also avoid having a manhole cover in a crosswalk. Please advise on how you would like to proceed.

SUGGESTION:

ANSWER: **Accept Suggestion:** ☐

Move proposed sewer MH north to STA 77.56 to avoid existing Traffic Signal
conduit conflict as shown in SK-U-013 attached. Construct 10-inch CB culvert lateral as shown SK-U-013 attached.

U-0121 **AWSS Caps at Beale Street** **Closed** **03/31/2011** **04/10/2011** **04/06/2011** **Potentially** ☐

From: Webcor Construction LP Colin Azevedo **To:** Turner Construction Compan Michelle Smith **Answered By:** AECOM Technical Servic Eric Zagol

Co-Author:

REQUEST:

1 - Current bid documents for Trade Group TG04.2R (AWSS system at Mission Street) call for capping of the AWSS system on Beale Street near the intersections with Howard Street and with Mission Street. Because of delays in the bid schedule for TG04.2R, the construction schedule dictates that these caps be completed well before the anticipated start of the TG04.2R field work. Please provide details so as to allow this capping work to be done in advance of the awarding of the TG04.2R scope of work.

2 - Please confirm whether the material required to do this work is available at the City of San Francisco.

3 - Please provide direction as to how this scope of work should proceed.

SUGGESTION:

ANSWER: **Accept Suggestion:** ☐

Pothole the existing AWSS gate valve at the Beale at Mission street proposed cap location as shown on M-6 (Rev No. 1, 1/31/11) to determine if the existing gate valve has lugs. SFWD to inspect condition of gate valve once excavated, coordinate with SFWD inspector accordingly.

Details for the capping work at Beale and Mission, and Beale and Howard will be provided following gate valve inspection.

Webcor/Obayashi Joint Venture

PROJECT MANAGEMENT - REQUEST AND ANSWERS LOG

30100 - Transbay Transit Center Project

This capping is near critical path on the current construction schedule. An expedited response is requested.

Number	Subject	Status	Date Created	Date Required	Date Answered	Cost Impact	Proceed
U-0121.1	**AWSS Caps at Beale Street**	**Closed**	**05/02/2011**	**05/12/2011**	**05/05/2011**	**Potentially**	☐

From: Webcor Construction LP Colin Azevedo **To:** Turner Construction Compan Gary Krutsch **Answered By:** AECOM Technical Servic Eric Zagol

Co-Author:

REQUEST:

The AWSS valve at Mission and Beale was potholed on 4/29/2011 per response to RFI#U-0121. It was confirmed that the existing valve does not have lugs.

Please provide details for capping the AWSS line on Beale.

SUGGESTION:

ANSWER: **Accept Suggestion:** ☐

Eric Zagol 5/4/2011 From Michael Smith (SFDPW BOE);

Refer to attached DWG M-6 Rev 1 with changes made on 05/04/11. Cap is to be tied back to (E) pipe with cast lugs.

Eric Zagol 4/5/2011 ***4/19/11 UPDATE***

In response to the numbered items above:

1. Refer to the attached markups of TG04.2R documents from SFDPW BOE that define the AWSS abandonment/capping scope for Beale Street; MA-6 for the work in Beale St. at Mission St., and MA-10 and MA-19 for the work in Beale St. at Howard St.

2. SFWD Inspector Daniel Helminiak has confirmed that the following materials are available at the SFFD Yard:

Beale at Mission Street

- 1 10-inch DI MJ spigot x GH spigot adapter

- 1 10-inch DI MJ flat cap

- 1 18-inch x 18-inch x 1-inch steel plate

Number	Subject	Status	Date Created	Date Required	Date Answered	Cost Impact	Proceed

Beale at Howard Street

- 4 10-inch DI stop collar

- 2 10-inch DI bell collar

- 1 10-inch DI flat cap

Coordinate with SFWD Inspector for materials provided by SFWD.

3. Proceed with this work per direction from TJPA Representative. Coordinate the shutdown of existing AWSS main in Beale St. with SFWD prior to commencing the work.

4. Submit pothole data for review per RFI response provided on 4/5/11 as stated below.

****
****

4/5/11 Response

Pothole the existing AWSS gate valve at the Beale at Mission street proposed cap location as shown on M-6 (Rev No. 1, 1/31/11) to determine if the existing gate valve has lugs. SFWD to inspect condition of gate valve once excavated, coordinate with SFWD inspector accordingly.

Details for the capping work at Beale and Mission, and Beale and Howard will be provided following gate valve inspection.

U-0122 **M Squared Submittals for TG04 Bid Packages** **Closed** **04/01/2011** **04/11/2011** **04/11/2011** **Potentially** ☐

From: Webcor Construction LP Colin Azevedo **To:** Turner Construction Compan Michelle Smith **Answered By:** Turner Construction Comp Michelle Smith

Co-Author:

REQUEST: **SUGGESTION:** **ANSWER:** **Accept Suggestion:** ☐

Number	Subject	Status	Date Created	Date Required	Date Answered	Cost Impact	Proceed

Please confirm the following:

Per previous discussions it has been agreed between the TJPA, AECOM, Turner Webcor/Obayashi and M Squared that material submittals approved for use by M Squared in individual bid packages will be considered acceptable for all bid packages M Squared is working on (TG04.1, TG04.3, TG04.4, & TG04.6).

These submittal include:

TG0434-002 - Excavation & Backfill Samples
TG0434-003 - Excavation & Backfill Test Reports
TG0434-004 - Excavation & Backfill Compaction & Warning Tape
TG0434-005 - Shoring Plan
TG0434-006 - Backfill Material
TG0434-007 - Water Utilities Distribution Piping & Valves
TG0434-010 - Asphalt Mix Design
TG0434-013 - Noise Mitigation Plan
TG0434-015 - CQC Plan
TG0434-016 - Health and Safety Plan and MSDS
TG0434-017 - SWPPP
TG0434-018 - Debris Management Plan
TG0434-025 - Cast in Place Concrete
TG0434-030 - Labor Rates
TG0404-001 - Sewer Package
TG0404-002 - Filter Fabric
TG0404-003 - Concrete Forming
TG0404-004 - Precast Concrete
TG0404-005 - Precast Concrete Catch Basin Base

Eric Zagol, 4/4/2011: AECOM suggests that the Construction Manager Oversight (Turner) confirms this RFI.

Guy Hollins, 4/5/2011: Confirmed for all submittals listed with the understanding that no deviations from the previously-approved submittal are allowed without the submission and approval of a separate and new submittal request.

Michelle Smith, 4/11/2011: TJPA has no objection to subcontractors using submittals that were submitted by their OWN company and approved for a previous TG04 Utilities Relocation trade package, as long as the application is the same as the application in the previous trade package.

U-0123 **Unknown Fire Service @ 85 Natoma** **Closed** **04/04/2011** **04/14/2011** **04/05/2011** **Potentially** ☐

From: Webcor Construction LP Colin Azevedo **To:** Turner Construction Compan Michelle Smith **Answered By:** AECOM Technical Servic Eric Zagol

Co-Author:

REQUEST:

While Excavating to install the water line on Natoma from the shoring wall to 2nd Street M Squared encountered an existing fire service going to 85 Natoma. This service is not shown on the drawings and is not in the specifications

SUGGESTION:

ANSWER: **Accept Suggestion:** ☐

SFPUC Customer Service Bureau data shows an active Domestic water, an active Fire water service, and 2 "killed" Domestic water services to 85 Natoma Street.

Number	Subject	Status	Date Created	Date Required	Date Answered	Cost Impact	Proceed

as one of the connections to be made to the new line.
(See attached)
Please advise on how to proceed.

Coordinate with SFWD to confirm and locate the active Fire water line to 85 Natoma Street.

Provide information on location, size, and material for review.

U-0123.1 **Fire Service @ 85 Natoma** **Closed** **04/11/2011** **04/21/2011** **04/18/2011** **Potentially** ☐

From: Webcor Construction LP Colin Azevedo **To:** Turner Construction Compan Michelle Smith **Answered By:** Webcor Construction LP Colin Azevedo

Co-Author:

REQUEST:

Please note that on RFI #U-0123 the location of the fire service was incorrectly drawn. The fire service is actually located around Sta 2+35.

M Squared potholed at Sta 2+35 and discovered a 4¿ ductile iron pipe which is believe to be the active fire service for 85 Natoma Street.

Please advise.

SUGGESTION:

ANSWER: **Accept Suggestion:** ☐

Eric Zagol 4/15/2011: Per response to RFI U-0123, coordinate with SFWD Inspector to confirm the 4" DIP is the active fire water service to 85 Natoma Street.

Once confirmed, provide and install 8"x8"x4" tee and 4" gate valve.

Connection to existing 4" DIP fire service by SFWD. Excavate and shore for connection in accordance with the contract documents. Coordinate with SFWD Inspector for connection by SFWD.

U-0124 **Conflict Between New 24" Sewer and existing AWSS Line on Beale** **Closed** **04/07/2011** **04/17/2011** **04/28/2011** **Potentially** ☐

From: Webcor Construction LP Colin Azevedo **To:** Turner Construction Compan Michelle Smith **Answered By:** AECOM Technical Servic Eric Zagol

Co-Author:

REQUEST:

M Squared has confirmed that the 14" AWSS Line shown on sheet U-3024 is in conflict with the proposed 24" VCP on Beale Street. The AWSS line is shown on the plan view but not on the elevation view on sheet U-3024.
M Squared also shot the elevation of the existing sewer manhole. The elevation is 4.60, and not 4.70 as shown on the plans. The invert of the 14" AWSS is 6.2. (See attached)
Please advise.

SUGGESTION:

ANSWER: **Accept Suggestion:** ☐

Eric Zagol 4/26/2011: Construct temporary 2-10" VCP and new SMH as shown on revised U-3024 (rev 2 4/26/11) and SK-U-0018. Construct SMH #701 to allow for future 24" VCP connection as indicated.

Relocate AWSS line in Howard St., not included in package. Design forthcoming potentially to be included in TG04.2R.

Following relocation of the AWSS line, construct 24" VCP sewer per contract documents.

Webcor/Obayashi Joint Venture

PROJECT MANAGEMENT - REQUEST AND ANSWERS LOG

30100 - Transbay Transit Center Project

Number	Subject	Status	Date Created	Date Required	Date Answered	Cost Impact	Proceed

---

U-0124.1 **Conflict Between 24" Sewer and AWSS Line on Beale** **Closed** **07/07/2011** **07/17/2011** **03/27/2012** **Potentially** ☐

From: Webcor Construction LP Colin Azevedo **To:** Turner Construction Compan Gary Krutsch **Answered By:** Turner Construction Comp Jeff Thiel

Co-Author:

REQUEST:
Per the response to RFI#U-0124 a design to relocate the AWSS line @ Howard and Beale is forthcoming. Please advise the status of this design.

SUGGESTION:
Eric Zagol 7/20/2011 Design is being performed by SFDPW BOE and will be tracked and issued via a forthcoming ASI. Schedule will be discussed with SFDPW BOE on 7/22/11. An update will be provided in the RUP OAC on 7/26/11.

ANSWER: **Accept Suggestion:** ☐
RFIs U-128.2 and U-124.1 were responded to in July of 2011 and provided temporary solutions to utility conflicts with a full resolution planned to come via future ASI. ASI 21, which addresses these issues, was uploaded to Constructware on 3/21/12 by Eric Zagol for design approval. A CR for this work will be issued in the near future.

U-0125 **Precast Catch Basin Bases** **Closed** **04/08/2011** **04/18/2011** **04/13/2011** **Potentially** ☐

From: Webcor Construction LP Colin Azevedo **To:** Turner Construction Compan Michelle Smith **Answered By:** AECOM Technical Servic Eric Zagol

Co-Author:

REQUEST:
In lieu of a cast in place base per CCSF DPW Standards, M Squared would like to propose the use of a precast catch basin. The catch basin barrel is attached to the precast base and it comes as one single unit. Before installing the precast catch basin base with barrel, M Squared will place a minimum 6" compacted level layer of crushed rock as the sub base. The proposed material specifications are attached.
Please confirm if this method is acceptable.

SUGGESTION:

ANSWER: **Accept Suggestion:** ☐
Eric Zagol 4/12/2011 Precast catchbasin base is approved with conditions specified.
The 5 foot catchbasin barrel shall be attached to the base section to form a monolith structure with the same dimensions, compressive strength and reinforcement as the CCSF DPW Standard cast in place base.
Provide a minimum 6" level layer of uniform compacted crushed rock as the sub base.

U-0126 **Existing Brick Man Hole @ Second and Natoma In Conflict With Joint Trench** **Closed** **04/11/2011** **04/11/2011** **04/13/2011** **Potentially** ☐

From: Webcor Construction LP Colin Azevedo **To:** Turner Construction Compan Michelle Smith **Answered By:** AECOM Technical Servic Eric Zagol

Co-Author:

REQUEST:
While potholing the Second St. Joint Trench crossing

SUGGESTION:

ANSWER: **Accept Suggestion:** ☐
Eric Zagol 4/12/2011: Confirm existing abandoned

Number	Subject	Status	Date Created	Date Required	Date Answered	Cost Impact	Proceed

Trinet encountered an existing brick sewer man hole which is in conflict with the joint trench alignment. The manhole is not shown on the plans and had been paved over. The manhole also appears to have been previously abandoned. See the attached sketch and photograph detailing the location of the manhole.

Please advise on how to proceed.

sewer manhole is filled with slurry grout to 4 feet below rim elevation.
Demolish and remove existing abandoned sewer manhole as required to construct the Joint Trench to an elevation 1-foot below bottom of Joint Trench. Backfill and restore in accordance with contract documents.

U-0127 **Minna Street Sewer Manhole #201 in Crosswalk** **Closed** **04/11/2011** **04/21/2011** **04/13/2011** **Potentially** ☐

From: Webcor Construction LP Colin Azevedo **To:** Turner Construction Compan Michelle Smith **Answered By:** AECOM Technical Servic Eric Zagol

Co-Author:

REQUEST:

Plan Sheet U-3007 shows MH#201 to be installed in the center of the crosswalk @ Minna and Second Street. The City of San Francisco typically avoids locating manholes in crosswalks, whenever possible, for ADA considerations. Please advise if MH#201 should be installed outside of the crosswalk.

SUGGESTION:

ANSWER: **Accept Suggestion:** ☐

Eric Zagol 4/13/2011: Sewer manhole location can not be adjusted due to an existing 8-inch Water and 4-inch HP Gas main. Construct manhole at the location per Plans.
In lieu of CCSF DPW Standard MH cover, provide an ADA complainant cover that meets the following specifications:
1. MATERIAL - The cast iron shall be in accordance with ASTM "Standard Specifications for Gray Cast Iron Castings" Designation A 48, Class 30. The tinsel strength shall be considered the primary test for qualification.
2. FINISH- STANDARD FINISH SHALL BE RAW, AS CAST, AND YIELD A MINIMUM COEFFICIENT FOR FRICTION OF .6 OR BETTER IN WET OR DRY CONDITIONS.
3. CASTINGS - SHALL BE FREE OF BLOW HOLES, FLASHING, GRIND MARKS, AND OTHER SURFACE BLEMISHES.
4. Cover shall incorporate a "pic-hole" for lifting purposes.
5. ADA COMPLIANCY- CASTINGS SHALL HAVE HOLES NO GREATER THAN ½" IN THE DOMINANT DIRECTION OF MOTION, NO VERTICAL RISE OF GREATER THAN ¼", IF THE RISE IS GREATER THAN ¼" THE RISE/RUN RATIO NEEDS TO BE 1;2 AND THE MAXIMUM HEIGHT SHALL BE 1/2".
6. Cover shall BE MADE TO FIT EXISTNG FRAMES

Number	Subject	Status	Date Created	Date Required	Date Answered	Cost Impact	Proceed

OR be MACHINED to FIT EXITING FRAMES PER SFDPW STANDARD PLAN 87,190.
7. Cover should be MADE of quality EQUAL TO OR GREATER then THE PRODUCTS MADE BY D&L Foundry or Equal, see attached product data sheet.

U-0128 **AWSS Conflict with Sewer on Fremont** **Closed** **04/11/2011** **04/21/2011** **04/19/2011** **Potentially** ☐

From: Webcor Construction LP Colin Azevedo **To:** Turner Construction Compan Michelle Smith **Answered By:** AECOM Technical Servic Eric Zagol

Co-Author:

REQUEST:

A pothole at Sta 0+52 has confirmed that the existing AWSS line is in direct conflict with the proposed sewer on Fremont Street. The drawings show a 4" HPW line at invert elevation 13.0. Measurements taken in the pothole reveal a 14" HPW line at invert elevation 8.4. At this elevation the HPW line is in direct conflict with the proposed VCP sewer.
Please advise.

SUGGESTION:

ANSWER: **Accept Suggestion:** ☐

Eric Zagol 4/19/2011 A temporary connection between MH #601 and (E) MH in Howard Street is being considered as an option. Please confirm the invert elevation of the (E) MH at Howard St. (Fremont St. STA 0+29.5) is EL 6.4 as shown on U-3022.

U-0128.1 **AWSS Conflict with Sewer on Fremont** **Closed** **04/11/2011** **04/21/2011** **04/26/2011** **Potentially** ☐

From: Webcor Construction LP Colin Azevedo **To:** Turner Construction Compan Michelle Smith **Answered By:** AECOM Technical Servic Eric Zagol

Co-Author:

REQUEST:

M Squared has confirmed the invert elevation for the existing manhole at station 0+29.5 Fremont St. is EL 6.4 as shown on U-3022.

Please adivse.

SUGGESTION:

ANSWER: **Accept Suggestion:** ☐

Eric Zagol 4/25/2011: In reference to RFI U-0128 and U-0128.1, construct temporary 15" VCP from SMH #601 to existing SMH at STA 0+29.50 as shown on attached SK-U-0016 and SK-U-0017. Construct SMH #601 to allow for future 30" VCP connection as indicated in SK-U-0016.

Relocate AWSS line in Howard St., not included in package. Design forthcoming potentially to be included in TG04.2R.

Following relocation of the AWSS line, construct 30" VCP sewer per contract documents.

Webcor/Obayashi Joint Venture

PROJECT MANAGEMENT - REQUEST AND ANSWERS LOG

30100 - Transbay Transit Center Project

Number	Subject	Status	Date Created	Date Required	Date Answered	Cost Impact	Proceed
U-0128.2	AWSS Conflict with Sewer on Fremont	Closed	07/07/2011	07/17/2011	03/27/2012	Potentially	☐

From: Webcor Construction LP Colin Azevedo **To:** Turner Construction Compan Gary Krutsch **Answered By:** Turner Construction Comp Jeff Thiel

Co-Author:

REQUEST:

Per the response to RFI#U-0128.1 a design to relocate the AWSS line @ Howard and Fremont is forthcoming.
Please advise the status of this design.

SUGGESTION:

Eric Zagol 7/20/2011 Design is being performed by SFDPW BOE and will be tracked and issued via a forthcoming ASI. Schedule will be discussed with SFDPW BOE on 7/22/11. An update will be provided in the RUP OAC on 7/26/11.

ANSWER: **Accept Suggestion:** ☐

RFIs U-128.2 and U-124.1 were responded to in July of 2011 and provided temporary solutions to utility conflicts with a full resolution planned to come via future ASI. ASI 21, which addresses these issues, was uploaded to Constructware on 3/21/12 by Eric Zagol for design approval. A CR for this work will be issued in the near future.

U-0129	Sewer Conflicts @ Second and Natoma	Closed	04/13/2011	04/25/2011	04/28/2011	Potentially	☐

From: Webcor Construction LP Colin Azevedo **To:** Turner Construction Compan Michelle Smith **Answered By:** AECOM Technical Servic Eric Zagol

Co-Author:

REQUEST:

M Squared is unable to excavate/shore/install the 18" VCP from the existing manhole at Sta 0+45 to MH#301 at Sta 0+81 as shown on sheet U-3010.
While excavating for the sewer installation M Squared encountered several unknown utilities which were unmarked and not shown on the contract drawings. Also, some of the known utilities are at different locations and elevations than indicated on the drawings. Due to the quantity and proximity of these utilities it is not possible excavate and shore between MH#301 and the existing MH at Sta 0+45.
Additionally PGE have yet to relocate their gas and electric utilities out of the area of the proposed MH#301.
See attached drawings illustrating M Squared's pothole findings.
Please advise on how to proceed.

SUGGESTION:

ANSWER: **Accept Suggestion:** ☐

Eric Zagol 4/27/2011: AECOM has reivewed the information provided and requests a meeting with W/O and M Squared to review the data, review the demolition and construction sequencing shown in AECOM plans, and further understand why excavation and shoring is not possible.

U-0129.1	Sewer Conflicts @ Second and Natoma	Closed	05/02/2011	05/12/2011	06/03/2011	Potentially	☐

From: Webcor Construction LP Colin Azevedo **To:** Turner Construction Compan Gary Krutsch **Answered By:** AECOM Technical Servic Eric Zagol

Co-Author:

REQUEST:

Per response to RFI#U-0129 Webcor/Obayashi, M Squared and AECOM met on 4/29/2011 and discussed why the sewer line between MH#301 and the existing manhole at Sta 0+45 could not be installed with normal

SUGGESTION:

ANSWER: **Accept Suggestion:** ☐

Eric Zagol 6/2/2011 Revised contract documents will be provided via ASI 011 to address conflicts between MH#301 and STA 0+45.

Number	Subject	Status	Date Created	Date Required	Date Answered	Cost Impact	Proceed

means and methods. M Squared remove the plates from their investigative pot hole trench on 5/2/2011 for AECOM to further review and understand the existing conflicts.

Please provide AECOM's findings from these meetings and provide direction on how to proceed with the sewer installation in this location.

Between MH #301 and MH #302:

1. Continue to perform subsurface investigations and submit location and elevation information for existing sewer laterals at the proposed connection to new sewer in accordance with Key Note 1 prior to construction.
2. Verify via pre construction TV inspection in accordance with Specification Section 33 31 10 that all active sewer laterals are shown on U-3010 and have been located in the field.

U-0130 **Sewer Removal On First Street** **Closed** **04/15/2011** **04/25/2011** **04/21/2011** **Potentially** ☐

From: Webcor Construction LP Colin Azevedo **To:** Turner Construction Compan Michelle Smith **Answered By:** Turner Construction Comp Kevin Chiu

Co-Author:

REQUEST:

During the weekly Utility Relocation OAC meeting on 04/12/2011 Eric Zagol with AECOM informed Webcor/Obayashi that new drawings for the removal of the existing sewer on First street had been issued on 04/08/2011. To date Webcor/Obayashi has not received these drawings.

Please advise the status of these drawings.

SUGGESTION:

ANSWER: **Accept Suggestion:** ☐

Kevin Chiu 4/21/2011: See CR U-022 transmitted on 4/18/2011 to W/O's document control email for ASI No. U-006 which contains the requested information.

U-0131 **Minna St PG&E Duct Bank Termination Points** **Closed** **04/19/2011** **04/29/2011** **04/22/2011** **Potentially** ☐

From: Webcor Construction LP Colin Azevedo **To:** Turner Construction Compan Michelle Smith **Answered By:** AECOM Technical Servic Eric Zagol

Co-Author:

REQUEST:

PG&E has confirmed Trinet is to terminate the PG&E duct back 3' outside the east and west walls of manhole 1319. Please confirm that the termination points of the PG&E duct bank as described will fulfill Trinet's scope of work and the future completion of the duct bank will be performed by PG&E.

SUGGESTION:

ANSWER: **Accept Suggestion:** ☐

Eric Zagol 4/21/201:1 Joint Trench termination points at EMH 1319 and 1318 are as follows:

1319 East wall; PG&E would like the conduit capped and left 3 feet short of the vault with concrete encasement 15 feet short of the vault.

Number	Subject	Status	Date Created	Date Required	Date Answered	Cost Impact	Proceed

Please note terminating the duct bank 3' outside the west wall of MH 1319 will leave the end of the ducts directly under the 24" high pressure water main. This may create an issue with future access for complete the duct bank by PG&E.

Please advise.

1319 West wall; PG&E would like the conduit capped and left 6 feet short (or 1-foot clear of existing 24-inch water, whichever is greater) of the vault with concrete encasement 15 feet short of the vault.

1318 North wall; PG&E would like the conduit capped and left 3 feet short of the vault with concrete encasement 15 feet short of the vault.

The new termination points shall be considered as the limit of new conduit installation at EMH 1319 and 1318.

U-0132 **Minna St Sewer Pressure Test** **Closed** **04/20/2011** **04/30/2011** **04/27/2011** **Potentially** ☐

From: Webcor Construction LP Colin Azevedo **To:** Turner Construction Compan Gary Krutsch **Answered By:** AECOM Technical Servic Eric Zagol

Co-Author:

REQUEST:

The SFDPW inspector Jason Chin has advised Trinet that he will be requesting a pressure test of the newly installed 18" and 24" VCP sewer main. The contract specification and drawings to do not specify any form of testing for the sewer mains.

Please advise if pressure testing of the sewer main will be required.

SUGGESTION:

ANSWER: **Accept Suggestion:** ☐

Eric Zagol 4/26/2011: Test sewers in accordance with the contract documents. See specification sections:

034010 3.1 E

CCSF DPW Standard Section 319 Low Pressure Testing per 333110 1.2 A.

333110 1.4 C

333110 3.7

333110 3.8 B

333110 3.9

Provide TJPA Representative and SFDPW inspector 72 hours of advanced notice prior to testing.

Webcor/Obayashi Joint Venture

PROJECT MANAGEMENT - REQUEST AND ANSWERS LOG

30100 - Transbay Transit Center Project

Number	Subject	Status	Date Created	Date Required	Date Answered	Cost Impact	Proceed
U-0132.1	**Sewer Main Pressure Test**	**Closed**	**05/07/2011**	**05/17/2011**	**05/11/2011**	**Potentially**	☐

From: Webcor Construction LP Colin Azevedo **To:** Turner Construction Compan Gary Krutsch **Answered By:** AECOM Technical Servic Eric Zagol

Co-Author:

REQUEST:

Trinet has been advised by Mission Clay (the VCP manufacture) that the hydrostatic test described in the SF Standard Specification Section 319.02 is primarily for cast iron or ductile iron pipe and is not recommended for clay pipe. The National Institute of Clay Pipe and Mission Clay recommend a low pressure air test in accordance with ASTM C 828. See attached copy of ASTM C 828. Trinet proposes using this low pressure air test in lieu of the 10psi hydrostatic test called for in the standard specifications. The low pressure air test will allow test on pipe runs with no service laterals ie: MH501-502, 206-207, 203-204, 202-201. Please advise if this is acceptable.

With regards to the three remaining pipe runs that have lateral connections, please provide direction of how to plug the laterals if required to test the main lines.

SUGGESTION:

ANSWER: **Accept Suggestion:** ☐

=======UPDATE 5/23/2011========

Kevin Chiu 5/23/2011 Below are links to devices for testing newly installed sewer pipes, specifically for main lines with active lateral connections that have been suggested within conversations between SFDPW, SFPUC and AECOM

http://newsite.cherneind.com/pneumatic/Long_Test_Ball_MS2_Test_Ball/

http://www.munipipe.com/chemical_grouting.html

http://veoliaes-is.com/Services/Environmental-and-Waste-Management/Total-Sewer-Management/Chemical-Grouting

Whether or not the contractors decide to utilize these devices is still up to them, as these are suggestions, not specifically required devices to be used for testing. It is the contractor's responsibility to perform testing on newly installed main lines, laterals, and manholes with their own means and methods while still protecting new and existing utilities.

==========

Eric Zagol 5/10/2011 ASTM C828 air test is an acceptable method to test sewer pipe in lieu of hydrostatic testing.

U-0133	**Minna St Joint Trench Configuration and Alignment, Sta 2+24 to 1+62**	**Closed**	**04/20/2011**	**04/30/2011**	**04/26/2011**	**Potentially**	☐

From: Webcor Construction LP Colin Azevedo **To:** Turner Construction Compan Gary Krutsch **Answered By:** AECOM Technical Servic Eric Zagol

Co-Author:

REQUEST:

During the installation of the AT&T ducts between Sta 2+24 and 1+62 the AT&T inspector, Juan, instructed Trinet to remove two bends from the duct bank. AECOM

SUGGESTION:

ANSWER: **Accept Suggestion:** ☐

Eric Zagol 4/21/2011 Please provide the referenced "attached...revised AT&T duct routing" for review.

Webcor/Obayashi Joint Venture

PROJECT MANAGEMENT - REQUEST AND ANSWERS LOG

30100 - Transbay Transit Center Project

Number	Subject	Status	Date Created	Date Required	Date Answered	Cost Impact	Proceed

was contacted and approved the layout in the field prior to Trinet proceeding. Attached is the revised AT&T duct routing required by the inspector.

Please confirm the revised joint trench alignment is acceptable.

U-0133.1 **Minna St Joint Trench Configuration and Alignment, Sta 2+24** **Closed** **04/26/2011** **05/10/2011** **05/02/2011** **Potentially** ☐

From: Webcor Construction LP Colin Azevedo **To:** Turner Construction Compan Gary Krutsch **Answered By:** AECOM Technical Servic Eric Zagol

Co-Author:

REQUEST:

During the installation of the AT&T ducts between Sta 2+24 and 1+62 the AT&T inspector, Juan, instructed Trinet to remove two bends from the duct bank. AECOM was contacted and approved the layout in the field prior to Trinet proceeding. Attached is the revised AT&T duct routing required by the inspector.

Please confirm the revised joint trench alignment is acceptable.

SUGGESTION:

ANSWER: **Accept Suggestion:** ☐

Eric Zagol 5/2/2011 Alignment of the AT&T ducts is acceptable as shown in the sketch provided.

U-0134 **Water Depatment Tie In Conflict at Howard and Beale** **Closed** **04/26/2011** **05/06/2011** **05/02/2011** **Potentially** ☐

From: Webcor Construction LP Colin Azevedo **To:** Turner Construction Compan Gary Krutsch **Answered By:** AECOM Technical Servic Eric Zagol

Co-Author:

REQUEST:

The SF Water Department has determined they are unable to perform the water tie in at the south west corner of Howard and Beale because of a conflict with the existing sewer sludge force main. M Squared has pothole the line and confirmed it is the existing 10" concrete encased sewer sludge force main.

Please advise.

SUGGESTION:

ANSWER: **Accept Suggestion:** ☐

Eric Zagol 4/29/2011: Cut and remove a section of the existing 10-inch sludge line to allow SFWD to perform the water main connection. Coordinate with SFWD to determine the extent of the existing sludge line to be removed.

Plug the ends of the existing 10-inch sludge line with concrete per 02 41 00 3.6 A.

The existing sludge line to the north will be demolished per TG04.6.

Number	Subject	Status	Date Created	Date Required	Date Answered	Cost Impact	Proceed

The connection of the new sludge line to the existing sludge line (south) per TG04.6, shall be made south of the plug.

U-0135 **4" Water Service @ 1st and Natoma** **Closed** **04/27/2011** **05/07/2011** **05/05/2011** **Potentially** ☐

From: Webcor Construction LP Colin Azevedo **To:** Turner Construction Compan Gary Krutsch **Answered By:** AECOM Technical Servic Eric Zagol

Co-Author:

REQUEST:

While excavating for the 6" service connection to the new water line on First Street at Sta2+25 M Squared located an additional 4" ductile iron service that is connected to the existing water main. This 4" line is not shown in the contract documents.

SFWD records show this to be a live service and would like for this to be tied into the new main.

There is now no point of connection on the new water line to receive this 4" service.

Please advise.

SUGGESTION:

ANSWER: **Accept Suggestion:** ☐

Eric Zagol 5/2/2011 Retap the existing 4" service to 500 Howard St. Coordinate service location with SFWD inspector. Submit piping plan showing the 4", 6" and 1" services for review.

Kevin Chiu 5/4/2011 Pending approval by the TJPA, a CR will be issued.

U-0135.1 **4" Water Service at First and Natoma** **Closed** **05/09/2011** **05/19/2011** **05/10/2011** **Potentially** ☐

From: Webcor Construction LP Colin Azevedo **To:** Turner Construction Compan Gary Krutsch **Answered By:** AECOM Technical Servic Eric Zagol

Co-Author:

REQUEST:

In response to RFI #U-0135, see attached piping plan, as requested in RFI response.

Once approved M Squared will coordinate with SFWD to perform the work.

An expedited response is required as this is holding up all other water work on Natoma Street

SUGGESTION:

ANSWER: **Accept Suggestion:** ☐

Eric Zagol 5/10/2011 With the understanding that the 12" main, 12" GV, 6" service and 1" service are already installed, furnish and install 4" GV and DIP service and connect to 12" main per piping plan.

Webcor/Obayashi Joint Venture

PROJECT MANAGEMENT - REQUEST AND ANSWERS LOG

30100 - Transbay Transit Center Project

Number	Subject	Status	Date Created	Date Required	Date Answered	Cost Impact	Proceed
U-0136	**Existing Water Bypass @ Howard and Fremont**	**Closed**	**05/03/2011**	**05/13/2011**	**05/05/2011**	**Potentially**	☐

From: Webcor Construction LP Colin Azevedo **To:** Turner Construction Compan Gary Krutsch **Answered By:** AECOM Technical Servic Eric Zagol

Co-Author:

REQUEST:

While planning for the water tie in at Howard and Beale the Water Department discovered that there is an existing bypass line that will connect the existing water system (which is to be abandoned) to the new water system. This bypass is not shown on the plans. The Water department has requested that the existing bypass be excavated and plated so it can be cut and capped while they have the line shut down for the tie in on the new system at Howard and Beale the night of 05/04/2011.

Please advise.

SUGGESTION:

ANSWER: **Accept Suggestion:** ☐

Eric Zagol 5/4/2011 RFI is not accruate and locations are incorrect.

Based on a field meeting with W/O ,SFWD Inspector and AECOM on 5/3/11, SFWD identified an unforeseen existing bypass pipe and gate valve that connects the existing 8-inch main in Fremont Street (to remain) to the existing 8-inch main in Howard Street (to be abandoned). The existing 8-inch main in Howard Street will be abandoned once the new 12-inch main is Howard is active.

Once the new 12-inch main in Howard Street is placed into service and the existing main is abandoned, the existing bypass and gate valve from the existing 8-inch active Fremont main will be connected to the abandoned Howard Street main. To mitigate the situation the SFWD proposes to cut and cap the existing bypass such that the existing Fremont main is not connected the abandoned main in Howard Street.

Coordinate with SFWD to locate existing bypass and define the limits of excavation required to cap the existing bypass.

Excavate to expose bypass. Shore and plate per specifications. Restore per specifications.

Cutting and capping of the existing bypass will be by SFWD.

Kevin Chiu 5/4/2011 Pending approval by the TJPA, a CR will be issued.

U-0137	**Verizon Ductbank conflict w/MH 701**	**Closed**	**05/03/2011**	**05/13/2011**	**05/10/2011**	**Potentially**	☐

From: Webcor Construction LP Colin Azevedo **To:** Turner Construction Compan Gary Krutsch **Answered By:** AECOM Technical Servic Eric Zagol

Co-Author:

Webcor/Obayashi Joint Venture

PROJECT MANAGEMENT - REQUEST AND ANSWERS LOG

30100 - Transbay Transit Center Project

Number	Subject	Status	Date Created	Date Required	Date Answered	Cost Impact	Proceed

REQUEST:

M Squared's sewer potholing on Beale (Sta 0+30) has indicated a conflict between an existing Verizon duct bank and MH# 701 on Howard Street. See attached drawing. The ductbank is approximately 18" wide x 18" deep. It is 2'4" to the top and it is slurry encased.
Verizon underground locators have confirmed that this is live and serves Charles Schwabb building south of Howard on Beale Street.
Please advise.

SUGGESTION:

ANSWER: **Accept Suggestion:** ☐

Eric Zagol 5/10/2011 Unforeseen condition, Verizon utility not shown in existing utility survey.

As suggested by Noel of (M Squared) during a site visit on 5/3/11 with W/O and AECOM, based on Noel's discussions with Mike Roybal (Verizon Field Engineer) and confirmed by AECOM based on follow up discussions with Mike Roybal (Verizon) and Pam Brown (Verizon), coordinate with Verizon and remove existing concrete encasement from existing duct to expose conduit in area of conflict. As directed in the field by Verizon, remove concrete encasement around duct from area in conflict to adjacent Verizon manhole. Move and support exposed Verizon conduit as required and directed by Verizon to construct manhole.

Coordinate with Mike Roybal (Verizon) at (415) 716-6736 such that a Verizon representative is present during the Verizon duct concrete encasement removal, moving and support install.

Restore Verizon duct to match existing concrete encasement following completion of sewer manhole.

U-0138	Temporary Telecom Pole Layout in Lot N and N'	Closed	05/09/2011	05/19/2011	05/10/2011	Potentially ☐

From: Webcor Construction LP Joanne Filipas **To:** Turner Construction Compan Gary Krutsch **Answered By:** AECOM Technical Servic Eric Zagol

Co-Author:

REQUEST:

Reference attached layout and submittal package#TG0406-014:

Due to the future use of lot N and N' prime, the temporary telecom poles must be relocated. The attached sketch indicates the proposed layout of these poles which has been coordinated with AECOM. Submittal Package#TG0406-014 has been submitted for formal approval of the pole locations.

Please confirm relocating the poles is acceptable.

SUGGESTION:

ANSWER: **Accept Suggestion:** ☐

Eric Zagol 5/10/2011 The pole alignment changes requested by CMGC along with additional requests from Telecommunications companies has required a pole and pole placement redesign. An ASI has been generated for the redesign with a CR forthcoming.

Webcor/Obayashi Joint Venture

PROJECT MANAGEMENT - REQUEST AND ANSWERS LOG

30100 - Transbay Transit Center Project

Number	Subject	Status	Date Created	Date Required	Date Answered	Cost Impact	Proceed
U-0139	**Existing Water Line on Beale in Conflict with New Sewer**	**Closed**	**05/09/2011**	**05/09/2011**	**05/10/2011**	**Potentially**	☐

From: Webcor Construction LP Colin Azevedo **To:** Turner Construction Compan Gary Krutsch **Answered By:** AECOM Technical Servic Eric Zagol

Co-Author:

REQUEST:

Today while trying to execute the USAR for the existing 12" water line on Beale Dan Helminiak with SFWD informed Webcor/Obayashi and M Squared that the existing water line will remain active until the water tie in at First and Natoma is completed and the existing 8" is capped at First and Howard as shown on sheet U-3116.

The water tie in and capping of the existing line on First Street is currently being delayed by separate issues and it is unclear when this work will be completed.

Dan Helminiak suggested that the existing 8" water line running down Howard could be capped by the water department at one of the existing tees which would allow the decommissioning of the existing line on Beale.

Please advise.

SUGGESTION:

ANSWER: **Accept Suggestion:** ☐

Eric Zagol 5/10/2011 Please clarify the question(s).

Subject states "Existing Water Line on Beale in Conflict with New Sewer". Per U-1124 Demolition and Construction Sequence order, Beale Street sewer is to commence after existing water main in Beale Street is abandoned. Please clarify where and what the conflict is.

Also, please confirm the following:

1. Is the new 12" main along Howard Street between First and Main streets active?
2. Is the new 12" main along Beale Street north of Howard Street active?
3. Is the new 12" main along Beale Street south of Mission Street active?

U-0139.1	**Cap (E) Water on Howard @ Beale**	**Closed**	**05/16/2011**	**05/26/2011**	**05/24/2011**	**Potentially**	☐

From: Webcor Construction LP Colin Azevedo **To:** Turner Construction Compan Gary Krutsch **Answered By:** AECOM Technical Servic Eric Zagol

Co-Author:

REQUEST:

-New 12" water main along Howard between First and Main is active.
-New 12" water main along Beale Street North of Howard is active.
-New 12" water main along Beale Street South of Mission is active.

Per U-1124 Demolition and Construction Sequence order, Beale Street sewer is to commence after existing water main on Beale is abandoned.
- The old water line on Howard Streets and Beale Streets is currently not active because the valves on the line at First and Howard are currently shutdown. Dan from the water department has expressed his concern that anyone can just open these valves and fill the old line along Howard Street. He is also concerned that the valve is not 100% closed and that the SFWD cannot get a complete shutdown on the old line. This means when M Squared

SUGGESTION:

ANSWER: **Accept Suggestion:** ☐

Eric Zagol 5/23/2011 Coordinate construction of the cap on the old Howard St. main at the intersection of Main St. with SFWD as shown on U-3119.

Coordinate construction of the cap on the old Howard St. main at the intersection of First St. with SFWD as shown on U-3116 (latest rev per SK-U-0003 1/28/11).

Per discussions with SFWD inspector, the old Howard St. main has been capped at Main St, Beale St. (south of the cross) and at the Fremont St. by-pass connection by SFWD. Additionally, the two line gates at First and Fremont streets are closed and have been filled with concrete.

The caps at Main, Beale, Fremont in combination with the closed line gates at First St. will allow sewer installation on Beale St. to proceed.

Number	Subject	Status	Date Created	Date Required	Date Answered	Cost Impact	Proceed

removes the old water line on Beale Street in order to install the new sewer, it is possible that there will be a constant flow of water in the old line.

The suggestion from Dan is to cap the old water line on Howard Street so that When M Squared removes the old line on Beale Street there will be no possibility of water flow. A cap on the line at Howard would also confirm for definite that the old line on Howard and Beale Street is "abandoned".

Please provide direction for capping the existing water line on Howard so the sewer installation on Beale can proceed.

U-0140 **Proposed Changes by BLHP to S/L Conduit Run @ 2nd & Minna** **Closed** **05/11/2011** **05/21/2011** **05/20/2011** **Potentially** ☐

From: Webcor Construction LP Colin Azevedo **To:** Turner Construction Compan Gary Krutsch **Answered By:** AECOM Technical Servic Eric Zagol

Co-Author:

REQUEST:

During a field meeting on 5/10/2011 with Eric Zagol, AECOM and Robert Kawano, BLHP to discuss the alignment of the conduit run from 2nd St to the relocated S/L pole @ Stn 2+89, Robert Kawano asked that a splice box be installed in the sidewalk downstream from the connection point to PG&E¿s manhole. The box would serve as the connection point for BLHP to PG&E¿s power supply from 2nd St for the street light. Because of an existing sidewalk basement, which is located along the north side of Minna, east of 2nd St., it was agreed in the field that the splice box should be placed in the sidewalk just west of the new fire hydrant located @ Stn 0+93. There is already a pocket constructed in the sidewalk basement to accommodate the fire hydrant and Trinet will locate the splice box within this pocket structure. A sketch is attached depicting the proposed alignment of the conduit run and the additional splice box as discussed in the field. Please confirm this is acceptable.

SUGGESTION:

ANSWER: **Accept Suggestion:** ☐

Eric Zagol 5/19/2011 Per BLHP's request, furnish and install a CCSF DPW precast pullbox, cover, and lid per CCSF DPW Standard Plans and Specifications between the PG&E supply point and the relocated street light pullbox along Minna Street east of Second Street.

Location; confirm that a sidewalk pullbox will fit in the knock out space above the 121-123 Second St. sidewalk basement adjacent to the newly installed fire hydrant prior to construction.

Maintain minimum bends in conduit run per Specification 33 71 00.

U-0141 **Street Light Connection Point at Second and Minna** **Closed** **05/16/2011** **05/26/2011** **05/20/2011** **Potentially** ☐

Webcor/Obayashi Joint Venture

PROJECT MANAGEMENT - REQUEST AND ANSWERS LOG

30100 - Transbay Transit Center Project

Number	Subject	Status	Date Created	Date Required	Date Answered	Cost Impact	Proceed

From: Webcor Construction LP Colin Azevedo **To:** Turner Construction Compan Gary Krutsch **Answered By:** AECOM Technical Servic Eric Zagol

Co-Author:

REQUEST:

In the response to our RFI # U-0016, Trinet was directed to connect the street lighting conduit on the west end of Minna into PG&E MH #1319 on 2nd St. At a field meeting on 5/10/1 with Eric Zagol and Robert Kawano, to discuss the alignment of the street lighting run for the relocated light on the west end of Minna, Eric advised that PG&E was contemplating a change in the connection point for this conduit run from MH 1319 to MH 1320. MH #1320 is located to the south of 1319 and further west towards the middle of 2nd St. Please confirm the connection point on 2nd St for the street lighting conduit.

SUGGESTION:

ANSWER: **Accept Suggestion:** ☐

5/26/11 UPDATE

Supply point has been confirmed as PG&E EMH 1320. Coordinate connection location with PG&E Field Engineer.

Eric Zagol 5/19/2011 Related to Joint Trench changes and PG&E's de-energization of Minna Street after the response to RFI U-0016 was provided, PG&E has revised their electrical plans with respect to EMH 1319 and has indicated that the preferred location for new street light power would be EMH 1320.

In accordance with U-3201 Note 7, AECOM considers this RFI as the request to coordinate connections with BLHP and PG&E through the TJPA representative for new street light circuit connections. AECOM and the TJPA Representative are in the process of coordinating Street Light Service Orders with BLHP and PG&E. Once the Service Order is processed the final connection point will be provided.

U-0142 **Concrete Specifications for Sidewalk Replacement @ 555 Mission** **Closed** **05/16/2011** **05/26/2011** **05/18/2011** **Potentially** ☐

From: Webcor Construction LP Colin Azevedo **To:** Turner Construction Compan Gary Krutsch **Answered By:** Turner Construction Comp Kevin Chiu

Co-Author:

REQUEST:

The sidewalk concrete @ 555 Mission (on Minna) is not the typical San Francisco sidewalk mix design. It is a colored concrete with what appears to be a sandblasted finish. Please provide the concrete specifications for repair and/or replacement of the sidewalk in this area.

SUGGESTION:

ANSWER: **Accept Suggestion:** ☐

Kevin Chiu 5/18/2011 Sidewalks shall be constructed of a dark gray, Hi-con @ 5 lbs. per cubic yard carbon black based concrete finish, with 25 to 30 lbs. per 100 square feet of silicon carbide sparkle grains. The surface of the concrete shall be washed and rinsed using a stiff brush, and if necessary shall be sandblasted to remove the concrete surrounding the aggregate to minimum depth of 1/8 inch.

U-0143 **Demolition of PG&E Duct Bank Alongside (N) 18" Sewer Main on Minna** **Closed** **05/16/2011** **05/26/2011** **05/20/2011** **Potentially** ☐

Number	Subject	Status	Date Created	Date Required	Date Answered	Cost Impact	Proceed

From: Webcor Construction LP Colin Azevedo **To:** Turner Construction Compan Gary Krutsch **Answered By:** AECOM Technical Servic Eric Zagol

Co-Author:

REQUEST:

During excavation and shoring for installation of the 18" Sewer main along Minna St., between the (E) electrical vault @ Stn 1+80 (demolished) and (N) manhole # 201, Trinet was unable to save the entire length of the existing PG&E duct bank (currently abandoned), which runs along the south side of the sewer trench. Between stations Stn 0+95 and 1+25 (approx.) the duct bank had veered into the sewer trench and had to be demolished - see attached sketch. Please review and advise.

SUGGESTION:

ANSWER: **Accept Suggestion:** ☐

Eric Zagol 5/19/2011 U-1107 (rev 2 3/16/11) indicates that the existing 6-4" PG&E duct is to be protected in place.

2 of the 6 existing 4" conduits will be utilized by PG&E to provide temporary construction power to W/O Skids 1 and 2 along Minna Street.

Mandrel existing conduits east of STA 1+25 to STA 1+70 (where new conduit caps were to be installed per contract) to confirm that the existing conduits that were to be protected in place have no blockages.

Coordinate with PG&E as STA 0+95 is exposed to determine which 2 of existing 4" conduits will be utilized for temporary construction power.

Furnish and install 2-4" conduits concrete encased to replace those that were removed during sewer construction. Connect new conduits to existing that will remain to provide temporary construction power.

U-0143.1 **(E) PG&E Duct Bank from EMH #1320 to Demolished EMH #1355** **Closed** **06/14/2011** **06/24/2011** **06/14/2011** **Potentially** ☐

From: Webcor Construction LP Colin Azevedo **To:** Turner Construction Compan Gary Krutsch **Answered By:** AECOM Technical Servic Eric Zagol

Co-Author:

REQUEST:

After further investigation of the existing PG&E duct bank between EMH #1320 and demolished EMH # 1355 (@ Anchor & Hope), Trinet found that there is only one unobstructed conduit between the two manholes. The unobstructed conduit is the one that already had a pull rope in place. Trinet had demolished a section of this conduit during excavation for sewer MH # 201 because it was in conflict with the shoring. Trinet replaced the damaged section (approx. 8 LF) on Saturday 6/1, and reconnected the pull rope in the conduit run. A sketch of the conduit run, depicting the section replaced, is attached. Please review and advise if one 4" conduit will be adequate from EMH #1320 to the west end of

SUGGESTION:

ANSWER: **Accept Suggestion:** ☐

Eric Zagol 6/14/2011 PG&E plans to use the existing conduit package to provide temp power to Skids 1 and 2. Mike Balmy of PG&E was notified and has confirmed that only 1-4" unobstructed conduit is required between EMH1320 and the cap at demolished EMH1355 for future temp power service.

Number	Subject	Status	Date Created	Date Required	Date Answered	Cost Impact	Proceed

demolished EMH #1355.

U-0144 **PGE Vault conflict with 24" VCP on Beale** **Closed** **05/17/2011** **05/27/2011** **05/20/2011** **Potentially** ☐

From: Webcor Construction LP Colin Azevedo **To:** Turner Construction Compan Gary Krutsch **Answered By:** AECOM Technical Servic Eric Zagol

Co-Author:

REQUEST:

PG&E confirmed the location of the inside of the east wall of PG&E manhole 1702 at Howard and Beale Street. Allowing for a 12" thick wall, the vault will be in conflict with the proposed alignment of the future 24" VCP, even with moving the alignment 1' further east as directed in RFI U-0124. The conflict could be avoided by moving the alignment another 6" further east. However this will cause a conflict between manhole #701 and the existing 14" AWSS. Additionally the Verizon duct bank conflict increases(RFI#U-0137).
Please advise.

SUGGESTION:

ANSWER: **Accept Suggestion:** ☐

Eric Zagol 5/19/2011 As discussed in the field on 5/18/11 with Jason Dunne (W/O) and Noel McCarthy (MSquared) the exact location of the existing PG&E MH outside wall and the existing AWSS is currently unknown.

Adjust locations of MH#701, MH#702, MH#704 and sewer alignment east as required (~6" as mentioned) for the 24" VCP installation (new and future) to avoid the existing PG&E MH however not in conflict in conflict with the existing 14" AWSS line.

Note, the existing AWSS line will be abandoned North of Beale Street STA 1+10.

Confirm alignment (2-10" VCP and future 24" VCP) will clear existing AWSS valve at STA 0+70.

U-0144.1 **PG&E Vault conflict with 24" VCP on Beale** **Closed** **06/30/2011** **07/10/2011** **07/01/2011** **Potentially** ☐

From: Webcor Construction LP Jonathan Flaming **To:** Turner Construction Compan Gary Krutsch **Answered By:** Turner Construction Comp Kevin Chiu

Co-Author:

REQUEST:

In response to RFI U-0144, please note that M Squared confirms the following:

2-10inch VCP and future 24inch VCP will clear existing AWSS Valve at Sta 0+70.

SUGGESTION:

ANSWER: **Accept Suggestion:** ☐

Kevin Chiu 7/1/2011 RFI does not request additional information.

Webcor/Obayashi Joint Venture

PROJECT MANAGEMENT - REQUEST AND ANSWERS LOG

30100 - Transbay Transit Center Project

Number	Subject	Status	Date Created	Date Required	Date Answered	Cost Impact	Proceed
U-0145	Sludge Main Conflicts with Existing Utilities	Closed	05/17/2011	05/27/2011	05/18/2011	Potentially	☐

From: Webcor Construction LP Colin Azevedo **To:** Turner Construction Compan Gary Krutsch **Answered By:** AECOM Technical Servic Eric Zagol

Co-Author:

REQUEST:

Please see attached pothole results for the new sludge main on Mission Street. Due to the quantity and location of existing utilities, and utility vaults/manholes it will not be possible to install the new 12" sludge main on Mission Street as shown on the contract drawings.

Please advise.

SUGGESTION:

ANSWER: **Accept Suggestion:** ☐

Eric Zagol 5/18/2011 Please indicate which utilities were marked via the USA ticket and or those identified by other means.

Number	Subject	Status	Date Created	Date Required	Date Answered	Cost Impact	Proceed
U-0145.1	Sludge Main Conflicts with existing utilities	Closed	05/18/2011	05/28/2011	06/07/2011	Potentially	☐

From: Webcor Construction LP Colin Azevedo **To:** Turner Construction Compan Gary Krutsch **Answered By:** AECOM Technical Servic Eric Zagol

Co-Author:

REQUEST:

In response to RFI# U-0145, see attached with notes. M Squared has marked what utilities were located via USA markings and what ones have been located via the contract drawings. There are also several unknowns that could not be identified.

SUGGESTION:

ANSWER: **Accept Suggestion:** ☐

Eric Zagol 6/7/2011 Revised contract documents will be provided via ASI 012 to address sludge line conflicts in Mission St.

Number	Subject	Status	Date Created	Date Required	Date Answered	Cost Impact	Proceed
U-0146	Proposed Pavement Reconstruction Plan for Minna Street	Closed	05/17/2011	05/27/2011	05/23/2011	Potentially	☐

From: Webcor Construction LP Colin Azevedo **To:** Turner Construction Compan Gary Krutsch **Answered By:** AECOM Technical Servic Eric Zagol

Co-Author:

REQUEST:

Please find the attached sketch detailing Trinet's proposed pavement reconstruction plan for Minna St., between 1St to 2nd Streets. Please review and advise.

SUGGESTION:

ANSWER: **Accept Suggestion:** ☐

Eric Zagol 5/23/2011 AECOM has reviewed the sketch provided and has the following comments in accordance with Contract requirements:

Confirm existing utilities to be demolished as shown on Demolition Plans have been demolished per Plans prior to final street restoration.
Provide FULL street restoration, curb to curb, in Minna St. West of the CDSM shoring wall (~STA 2+25) to Second Street in accordance with Contract requirements (DPW ORDER NO. 178,940 [superseding DPW ORDER 176,707] per specification SECTION 32 12 17)
Construct Curbs in accordance with DPW Stnd. Plan 87,169

Webcor/Obayashi Joint Venture

PROJECT MANAGEMENT - REQUEST AND ANSWERS LOG

30100 - Transbay Transit Center Project

Number	Subject	Status	Date Created	Date Required	Date Answered	Cost Impact	Proceed

Construct Driveways in accordance with DPW Stnd. Plan 87,171
Construct Joints for Concrete Pavement Base in accordance with DPW Stnd. Plan 87,174
Per Contract specification SECTION 32 12 17, reconstruct curb returns at Second and Minna Per DPW ORDER NO. 178,940 (superseding DPW ORDER 176,707) Regulations for Excavating and Restoring Streets in San Francisco Section 9.4 B. Excavation affecting curb returns, stated as follows:

1. Any excavation (including trenchless technology) encroaching upon any part of an angular corner requires the installation or reconstruction of curb ramp(s) at the affected corner to current standards by the Permittee. Permittee's are encouraged to contact BSM Inspection Division to determine if curb ramps within a project are compliant or must be replaced at least 45 days prior to the commencement of any work.

2. Curb ramps must be constructed in accordance with current City standards (Drawing Nos. 55,017 Rev. 3; 55,017.1, 55,018 Rev.3; 55,018.1; 55,018.2; 55,018.3 "Exception to Standard Curb Ramps") (Appendix 5).

U-0146.1 **Proposed Pavement Reconstruction** **Plan for Minna Street** **Closed** **05/27/2011** **06/06/2011** **05/27/2011** **Potentially** ☐

From: Webcor Construction LP Colin Azevedo **To:** Turner Construction Compan Gary Krutsch **Answered By:** AECOM Technical Servic Eric Zagol

Co-Author:

REQUEST:

Attached, please find a sketch detailing Trinet's revised pavement reconstruction plan for Minna St., between 1St to 2nd Streets, which incorporates Balfour Beatty's request that Trinet stop the new pavement section 5' north of centerline of the CDSM shoring wall (2' north of demarcation line).

SUGGESTION:

ANSWER: **Accept Suggestion:** ☐

*** 5/31/11 Revision ***

Restore entire width of Minna street using concrete road base and ACWS curb to curb in accordance with Contract drawings and DPW Order No. 176,707 (and latest revision 178,940) Section 11.

5/27/11 Response:

Webcor/Obayashi Joint Venture

PROJECT MANAGEMENT - REQUEST AND ANSWERS LOG

30100 - Transbay Transit Center Project

Number	Subject	Status	Date Created	Date Required	Date Answered	Cost Impact	Proceed

Please provide BBIIs traffic control plan and construction logistics plan for Minna St. during pre-trenching and CDSM shoring wall construction.

AECOM's specific questions are as follows:

1. What portion of Minna St. will be maintained for vehicular traffic during pre-trenching and CDSM wall construction? Please provide dimensions from face of north curb along Minna St.
2. Is a traffic barrier (k-rail or other) planned to be installed along Minna St. during pre-trenching and CDSM wall construction? Provide location, dimension from face of north cur along Minna St.
3. If a traffic barrier is planned, what is the schedule for the installation?
4. Once pre-trenching is complete will any of the pretrenching trench area be restored and used for vehicular traffic?
5. Once the CDSM shoring wall is constructed will the traffic barrier move south and the vehicular area be widened? If so by how much? Please provide a dimension from the face of north curb along Minna St.

This information is critical in order to provide a responses to this RFI as well as RFI U-147 and U-148 in an effort to determine how RUP will restore Minna St.; crowned or sloped, and how the Minna St. restoration conforms to the future Transit Center Minna St. design.

U-0146.2 **Pavement Reconstruction Plan for Minna Rev 2** **Closed** **06/02/2011** **06/12/2011** **06/07/2011** **Potentially** ☐

From: Webcor Construction LP Colin Azevedo **To:** Turner Construction Compan Gary Krutsch **Answered By:** AECOM Technical Servic Eric Zagol

Co-Author:

REQUEST:

Please find attached a revised (Rev2) pavement Reconstruction Cross Section drawing for Minna St., which details Trinets understanding of the Engineer's latest response to RFI#U-0146.1 and RFI#U-0147. Please

SUGGESTION:

ANSWER: **Accept Suggestion:** ☐

Eric Zagol 6/7/2011 Street restoration detail is acceptable with the following corrections:

1. The southern extent (limit) of concrete base and

Number	Subject	Status	Date Created	Date Required	Date Answered	Cost Impact	Proceed

confirm pavement reconstruction can proceed per the attached detail..

ACWS between STA 2+30 and First Street shall be based on U-5101 Detail 6 and the limit of excavation required to do perform the Demolition and New utilities work in Minna Street. Conform to final saw cut lines as indicated in Detail 6.

U-0147 **Existing Top-Of-Curb Grades @ Minna Driveways for 575 Mission Building** **Closed** **05/27/2011** **06/06/2011** **06/01/2011** **Potentially** ☐

From: Webcor Construction LP Colin Azevedo **To:** Turner Construction Compan Gary Krutsch **Answered By:** AECOM Technical Servic Eric Zagol

Co-Author:

REQUEST:

The existing driveways entering the 575 Mission St building, are depressed between 2 ½" to 3" below the adjacent top-of-curb and sidewalk grades - see attached drawing depicting the driveways. This condition seems to be a consequence of repeated overlaying of Minna street, which has resulted in a curb height in many areas far less than the City standard of 6 inches. The street grade along the north side of Minna along the 575 Mission building ranges from 3 ½ to 4 ½ inches below top-of-curb grade.

Trinet has been directed in the field by Jason Chin, and by the Engineer in RFI #U-0146, to construct the new roadway with finish grade at curb line 6" below top-of-curb grade. This is consistent with City standard plan # 87,169. The new roadway grades will result in 3" to 3 ½" of exposed curb height at the driveways to 575 Mission, which is considerably deeper than the 1" called for in the San Francisco standard plans for driveway construction (plan # 87,171). It will also not be possible to raise the street grade at the driveways without impeding road runoff drainage and causing ponding.

Please review and advise.

SUGGESTION:

ANSWER: **Accept Suggestion:** ☐

Eric Zagol 5/31/2011 Restore pavement along existing curbs and driveways along the north side of Minna St. in accordance with Contract drawings and DPW Order No. 176,707 (and latest revision 178,940) Section 12 to match existing flow line elevations at curbs and driveways shown on U-1001. 6-inch curb and driveways along Minna St. will be reconstructed at a later date as part of the Transit Center Project.

U-0148 **Pavement Reconstruction Plan for West End of Minna Street - Stn 2+15 to 2nd St** **Closed** **05/27/2011** **06/06/2011** **06/07/2011** **Potentially** ☐

From: Webcor Construction LP Colin Azevedo **To:** Turner Construction Compan Gary Krutsch **Answered By:** AECOM Technical Servic Eric Zagol

Number	Subject	Status	Date Created	Date Required	Date Answered	Cost Impact	Proceed

Co-Author:

REQUEST:

Please provide a pavement reconstruction drawing, or typical cross section detail, for the west end of Minna St from Stn 2+15 to 2nd St. Trinet had planned to reconstruct the street in this area from curb to curb. We find however, that there is a grade difference of approximately 6 inches between top-of-curb on the north side of the street and the south side, with the south side being at the higher grade. The construction detail approved in RFI #U-0146 (Trinet #094) cannot be utilized in this area, because the street already has a cross slope of approx. 2% from south to north.

SUGGESTION:

ANSWER: **Accept Suggestion:** ☐

Eric Zagol 6/7/2011 See response to RFI 146.2

U-0149 **MH#701 Conflicts with existing utilities** **Closed** **05/27/2011** **06/06/2011** **06/09/2011** **Potentially** ☐

From: Webcor Construction LP Colin Azevedo **To:** Turner Construction Compan Gary Krutsch **Answered By:** AECOM Technical Servic Eric Zagol

Co-Author:

REQUEST:

The 14" AWSS line west of MH#701 was found to be constructed thru the roof of the existing 3x5 sewer. Several bends were used in the AWSS line construction and these bends included lugs and tie rods. As a result of the presence of these tie rods and fittings we can now not move MH#701 any further west.
To install the new 24" VCP in a straight line (perpendicular to MH wall), and in order to get by the existing PGE MH we will have to pour the pipe wall and 2" of the internal diameter of the pipe into the west wall of MH 701.
Please advise on how to proceed.

SUGGESTION:

ANSWER: **Accept Suggestion:** ☐

Eric Zagol 6/8/2011 Deflect VCP pipe joints in accordance with ASTM C425 (max 1.8 degrees per joint) to allow for 6" of deflection to avoid the existing PG&E MH and connect to MH#701 as shown in the attached SK-U-0019.

Confirm in the field that 6" deflection will allow the 24" VCP to be clear of the MH wall.

U-0149.1 **MH#701 Conflicts with existing utilities** **Closed** **06/30/2011** **07/10/2011** **07/01/2011** **Potentially** ☐

From: Webcor Construction LP Jonathan Flaming **To:** Turner Construction Compan Gary Krutsch **Answered By:** Turner Construction Comp Kevin Chiu

Co-Author:

REQUEST:

In response to RFI U-0149, please note the following:

M Squared confirms that 6inch deflection of the VCP will allow the 24inch pipe to be clear of the manhole wall.

SUGGESTION:

ANSWER: **Accept Suggestion:** ☐

Kevin Chiu 7/1/2011 RFI does not request additional information.

Webcor/Obayashi Joint Venture

PROJECT MANAGEMENT - REQUEST AND ANSWERS LOG

30100 - Transbay Transit Center Project

Number	Subject	Status	Date Created	Date Required	Date Answered	Cost Impact	Proceed
U-0150	**Proposed Correction to Field Condition Report 40C**	**Closed**	**05/31/2011**	**06/10/2011**	**06/01/2011**	**Potentially**	☐

From: Webcor Construction LP Colin Azevedo **To:** Turner Construction Compan Gary Krutsch **Answered By:** AECOM Technical Servic Eric Zagol

Co-Author:

REQUEST:

Please see the attached detail from Trinet Construction Inc for their proposed solution to mitigate the incorrect installation of CB203 identified in Field Condition Report 40C.

Please advise if the proposed solution is acceptable.

SUGGESTION:

ANSWER: **Accept Suggestion:** ☐

Eric Zagol 6/1/2011 The proposed solution has been reviewed and approved by SFDPW BOE and is acceptable. Construct catch basin as shown in the Trinet proposed construction detail attached to CR40C. Construct the clean out on the cast iron trap such that it is accessible from above for maintenance via removal of the grate . Coordinate inspection during installation with DPW BCM inspector through the TJPA's Representative.

U-0151	**Additional Sewer Lateral Connection for 100 1st Street**	**Closed**	**06/02/2011**	**06/12/2011**	**06/08/2011**	**Potentially**	☐

From: Webcor Construction LP Colin Azevedo **To:** Turner Construction Compan Gary Krutsch **Answered By:** AECOM Technical Servic Eric Zagol

Co-Author:

REQUEST:

Trinet has discovered an additional sewer lateral for the 100 1st Street building which was not connected to the new 24" sewer main - see attached sketch. The lateral is located at sta. 7+09 and services a single toilet and the rear of the building. This lateral was not shown on the plans and there was no vent in the sidewalk to indicate the existence of a lateral. Trient potholed the lateral in the sidewalk and a 4" cast iron lateral, a 4" cast iron trap and a 4" cast iron vent pipe capped 2' below grade. Please confirm Trinet is to tie the lateral into the new 24" sewer main on Minna. Also, please advise what is to be done with existing cast iron trap and vent pipe assembly which are not up to current DPW standards.

SUGGESTION:

ANSWER: **Accept Suggestion:** ☐

Eric Zagol 6/8/2011 In accordance with U-3000 General Note 12, contractor was to verify that there are no active sewer lateral connections to the existing sewer prior to sewer demolition.

Please provide the elevation of the existing sewer lateral and the location of existing 4" cast iron vent pipe for review.

Renewal of this lateral will be discussed with TJPA and 100 First St. property owner, final direction forthcoming.

U-0151.1	**Additional Sewer Lateral Connection**	**Closed**	**06/29/2011**	**07/09/2011**	**07/05/2011**	**Potentially**	☐

From: Webcor Construction LP Jonathan Flaming **To:** Turner Construction Compan Gary Krutsch **Answered By:** AECOM Technical Servic Eric Zagol

Co-Author:

REQUEST:

This is a follow-up to the request by the Engineer in his response to W/O RFI #U-0151 (Trinet RFI #097) for

SUGGESTION:

ANSWER: **Accept Suggestion:** ☐

Eric Zagol 7/5/2011 In reference to RFI-151 and 151.1:

Number	Subject	Status	Date Created	Date Required	Date Answered	Cost Impact	Proceed

additional information relating to the 2nd sewer lateral connection for the 100 1st St building. Trinet also clarifies the issue of the existing 4" trap on the line, which was raised in the original RFI.

The sewer lateral is located @ Stn. 7+09 and the invert elevation of the 4" cast iron sewer lateral pipe at face-of-curb is 14.6'. The elevation for the top of the new concrete encased ductbank @ Stn 7+09 is 13.85'. The sewer lateral was therefore not in conflict with the new joint trench utilities.

With regards to the existing 4" trap on the line, Trinet checked with the SF Plumbing department which adviced that a 4" cast iron trap was adequate for a 4" sewer lateral. The existing trap was therefore in compliance with the SF plumbing code. Trinet advised Jason Chin of this in the field and he agreed that the trap did not need to be replaced.

The 4" cast iron vent pipe for the trap did not extend to street level but was capped-off approximately 18" below grade. Per field discussions with Jason Chin, Trinet extended the trap vent piping to grade and installed a street vent frame & cover in the sidewalk.

1. Reconnect existing lateral to new 24" Minna St. sewer in accordance with SFDPW Standard Plan 87,196.
2. Extend fresh air inlet and air inlet cover to existing sidewalk grade.

U-0152 **Alternate Manhole Testing Method** **Closed** **06/02/2011** **06/12/2011** **06/07/2011** **Potentially** ☐

From: Webcor Construction LP Colin Azevedo **To:** Turner Construction Compan Gary Krutsch **Answered By:** AECOM Technical Servic Eric Zagol

Co-Author:

REQUEST:

Spec section 03 40 10 3.1 E directs the contractor to test all manholes hydraulically by exfiltration testing.
M Squared proposes the use of the vacuum method of testing manhole sections instead of the above method (See attached)
This vacuum method is in accordance with ASTM C1244.

Please advise if this is acceptable.

SUGGESTION:

ANSWER: **Accept Suggestion:** ☐

Eric Zagol 6/7/2011 Vacuum method in accordance with ASTM C1244 is acceptable for testing of sewer manholes.

Webcor/Obayashi Joint Venture

PROJECT MANAGEMENT - REQUEST AND ANSWERS LOG

30100 - Transbay Transit Center Project

Number	Subject	Status	Date Created	Date Required	Date Answered	Cost Impact	Proceed
U-0153	Concrete Slab and Rail Ties Conflict with Sludge Line on Howard	Closed	06/03/2011	06/13/2011	06/21/2011	Potentially	☐

From: Webcor Construction LP Colin Azevedo **To:** Turner Construction Compan Gary Krutsch **Answered By:** AECOM Technical Servic Eric Zagol

Co-Author:

REQUEST:

While potholing for the sludge line alignment along Howard Street between Beale and Main at Sta 18+00 and Sta 19+42 M Squared discovered the presence of wooden rail ties and concrete slab (see attached photos).
These are possibly the same ties and slab that M Squared encountered while installing the water line on TG04.3.
They are in direct conflict with the proposed location of the new sludge line along Howard Street.
Please advise.

SUGGESTION:

ANSWER: **Accept Suggestion:** ☐

Eric Zagol 6/21/2011

*** 6/21/11 Update ***

Based on follow up discussions with W/O and M2, and further understanding of the extents of the concrete slab and wooden rails ties found further West (Howard and Fremont streets TG04.3), remove and dispose of concrete and wooden rail ties as required to construct 12" sludge line.

Eric Zagol 6/8/2011 Pothole at STA 18+00 to determine the extents (southern and northern) of the concrete slab and wooden rail ties. Submit pothole data for review.

U-0154	Electrical Service for Street Lights on Natoma	Closed	06/08/2011	06/18/2011	09/01/2011	Potentially	☐

From: Webcor Construction LP Colin Azevedo **To:** Turner Construction Compan Gary Krutsch **Answered By:** Webcor Construction LP Chris Lotti

Co-Author:

REQUEST:

Per Sheet U-1120 the electrical service feeding the street lights on Natoma is to be demolished, see attached. This conduit has been exposed through the investigative trenching process on First, confirmed dead and remove. As a result the existing street lights on Natoma are without power. There are no details provided in the plans for reestablishing power to these street lights now that the demo is complete.

Please advise.

SUGGESTION:

Eric Zagol 6/20/2011 Natoma Street street light power renewal to be addressed via ASI 014 forthcoming.

ANSWER: **Accept Suggestion:** ☐

Change Request No. U-043R1 -Renew Natoma Street Light Power Supply (ASI No. 014) [30100.03] - Force Account issued 9/13/2011.

U-0155	AWSS Cast In Place Concrete Testing	Closed	06/20/2011	06/30/2011	06/28/2011	Potentially	☐

From: Webcor Construction LP Jonathan Flaming **To:** Turner Construction Compan Gary Krutsch **Answered By:** Turner Construction Comp Kevin Chiu

Co-Author:

Webcor/Obayashi Joint Venture

PROJECT MANAGEMENT - REQUEST AND ANSWERS LOG

30100 - Transbay Transit Center Project

Number	Subject	Status	Date Created	Date Required	Date Answered	Cost Impact	Proceed

REQUEST:

The AWSS Specification section 03300-2, Cast-In-Place Concrete 1.5 C (Quality Assurance) states that the concrete testing will be performed by an agency employed by the TJPA.

However, 03300-10, 3.9 B (Field Quality Control) states that the concrete testing will be performed by the City Testing and Inspection Agency.

Please advise who will be preforming the cast in pace concrete testing.

SUGGESTION:

ANSWER: **Accept Suggestion:** ☐

Kevin Chiu 6/28/2011 The TJPA employed testing agency will provide concrete testing per 03300-2, 1.5C.

Michael Smith's (SFDPW) response, "TJPA can have testing performed or set funding in place for testing by SFDPW's testing lab," dated and signed on 6/27/11 (see attached).

U-0156 **Sink Hole under road base at MH#701** **Closed** **06/21/2011** **07/01/2011** **06/22/2011** **Potentially** ☐

From: Webcor Construction LP Jonathan Flaming **To:** Turner Construction Compan Gary Krutsch **Answered By:** AECOM Technical Servic Eric Zagol

Co-Author:

REQUEST:

While excavating for MH#701 M Squared discovered what appears to be a large void under the street base adjacent to the west wall of the MH#701. We estimate the void to be approximately 3' wide and 12' long. This may be a hazard as the street base may collapse at some point in the future.

Please advise how you would like to proceed.

SUGGESTION:

ANSWER: **Accept Suggestion:** ☐

Eric Zagol 6/22/2011 Unforeseen existing condition not clear if directly related to the Relocation of Utilities Project work.

AECOM suggests that the existing pavement be removed over the area of the sink hole and conditions be evaluated.

Once existing utilities are determined to be secure, backfill with a sand cement slurry and restore pavement in accordance with SFDPW Standard Plans and Specifications.

Kevin Chiu 6/22/2011 Coordinate repair of sink hole with TJPA representative. Repair work to be paid under CR U-039

U-0157 **Pressure Testing for Sewer Manhole #'s 501 & 502 on 1st St.** **Closed** **06/28/2011** **07/08/2011** **07/08/2011** **Potentially** ☐

Number	Subject	Status	Date Created	Date Required	Date Answered	Cost Impact	Proceed

From: Webcor Construction LP Jonathan Flaming **To:** Turner Construction Compan Gary Krutsch **Answered By:** AECOM Technical Servic Eric Zagol

Co-Author:

REQUEST:

This RFI is a follow-up to discussions in the field with AECOM and the SFDPW Inspector and Trinet, regarding Trinet's inability to perform a pressure test on sewer manholes 501 & 502 on 1st St. due to field conditions. MH #502 is constructed around the existing 3x5 brick sewer on one side (per SF Standard Plan #87,184) and Trinet has no means of plugging the brick sewer effectively to withstand a pressure test.

In the case of sewer MH #501, the original design was similar to MH #502 and a pressure test would not have been possible. The revised design (see attached drawing) includes a temporary 24" corrugated PVC pipe stub extending south from the manhole and connecting to the existing 3x5 brick sewer. The inside of the temporary 24" pipe stub is also corrugated, and therefore cannot be sealed with an inflatable pipe plug, as would be required to perform a pressure test of the manhole structure.

Please confirm that a pressure test will not be required for sewer manholes 501 & 502 on 1st St.

SUGGESTION:

ANSWER: **Accept Suggestion:** ☐

Eric Zagol 7/8/2011 Confirmed. Pressure tests for sewer manholes #501 and #502 are not required due to the restrictive conditions.

U-0158 **MH #301 Location** **Closed** **07/15/2011** **07/25/2011** **07/20/2011** **Potentially** ☐

From: Webcor Construction LP Colin Azevedo **To:** Turner Construction Compan Gary Krutsch **Answered By:** AECOM Technical Servic Eric Zagol

Co-Author:

REQUEST:

During our sewer work at 2nd and Natoma M Squared discovered that the Telecom Vault shown on the drawings is in fact significantly larger in the field than is shown on the plans. In order to be able to shore for MH#301 construction M Squared has had to move the location of MH four (4) feet east along Natoma. As a result the jack and bore alignment is now a few inches south of what is shown on the plans.

Please confirm that these adjustments are acceptable.

SUGGESTION:

ANSWER: **Accept Suggestion:** ☐

Eric Zagol 7/20/2011 Adjustments proposed are acceptable.

Since the adjustment pushes the MH and cover into the crosswalk path of travel, in lieu of CCSF DPW Standard MH cover, provide an ADA complainant cover that meets the following specifications:

1. MATERIAL - The cast iron shall be in accordance with ASTM "Standard Specifications for Gray Cast Iron Castings" Designation A 48, Class 30. The tinsel strength shall be considered the primary test for qualification.
2. FINISH- STANDARD FINISH SHALL BE RAW, AS

Number	Subject	Status	Date Created	Date Required	Date Answered	Cost Impact	Proceed

CAST, AND YIELD A MINIMUM COEFFICIENT FOR FRICTION OF .6 OR BETTER IN WET OR DRY CONDITIONS.
3. CASTINGS - SHALL BE FREE OF BLOW HOLES, FLASHING, GRIND MARKS, AND OTHER SURFACE BLEMISHES.
4. Cover shall incorporate a "pic-hole" for lifting purposes.
5. ADA COMPLIANCY- CASTINGS SHALL HAVE HOLES NO GREATER THAN ½" IN THE DOMINANT DIRECTION OF MOTION, NO VERTICAL RISE OF GREATER THAN ¼", IF THE RISE IS GREATER THAN ¼" THE RISE/RUN RATIO NEEDS TO BE 1;2 AND THE MAXIMUM HEIGHT SHALL BE 1/2".
6. Cover shall BE MADE TO FIT EXISTNG FRAMES OR be MACHINED to FIT EXITING FRAMES PER SFDPW STANDARD PLAN 87,190.
7. Cover should be MADE of quality EQUAL TO OR GREATER then THE PRODUCTS MADE BY D&L Foundry or Equal, see attached product data sheet.

U-0159 **Unknown Concrete Structure In Conflict with Sludge Line on Mission** **Closed** **07/28/2011** **08/07/2011** **08/16/2011** **Potentially** ☐

From: Webcor Construction LP Colin Azevedo **To:** Turner Construction Compan Gary Krutsch **Answered By:** AECOM Technical Servic Eric Zagol

Co-Author:

REQUEST:

While potholing at the locations shown on the attached drawing M Squared discovered what appears to be a concrete wall under the parking strip. M Squared excavated both potholes 7' deep and at that depth the wall appeared to be continuing deeper. This concrete structure is in direct conflict with the proposed location of the new sludge main on Mission Street. The concrete curb on the north side of Mission St also extends 7' deep.

See attached pothole findings.

Please advise on how you would like to proceed.

SUGGESTION:

ANSWER: **Accept Suggestion:** ☐

Eric Zagol 8/16/2011 In accordance with specification sections 000810 and 020630, please submit for review locations and findings for all potholes performed along Mission Street associated with the Sludge FM.

Webcor/Obayashi Joint Venture

PROJECT MANAGEMENT - REQUEST AND ANSWERS LOG

30100 - Transbay Transit Center Project

Number	Subject	Status	Date Created	Date Required	Date Answered	Cost Impact	Proceed
U-0159.1	Conflict with Sludge Line Conflict on Mission	Closed	08/26/2011	09/05/2011	09/13/2011	Potentially	☐

From: Webcor Construction LP Jacob Giannandrea **To:** Turner Construction Compan Gary Krutsch **Answered By:** AECOM Technical Servic Eric Zagol

Co-Author:

REQUEST:

In response to RFI U-159. See attached pothole findings from remaining potholes on Mission street. Also included is pothole data for Sta 17+28 and Sta 17+50.

SUGGESTION:

ANSWER: **Accept Suggestion:** ☐

In response to RFI U-159 and 159.1:

For 12"Sludge FM on Mission at Beale St., information provided shows an existing unforeseen concrete wall 23" from the face of curb, the proposed 12" Sludge FM is shown 1' from the curb. Construct 12" Sludge FM between face of curb and existing concrete wall.

U-0159.2	Unknown Concrete Structure Sludge Line Conflict	Closed	09/15/2011	09/15/2011	09/21/2011	Yes	☐

From: Webcor Construction LP Colin Azevedo **To:** Turner Construction Compan Steve Cunningham **Answered By:** AECOM Technical Servic Eric Zagol

Co-Author:

REQUEST:

In response to RFI U-159.1
There is not adequate space between the face of curb and the unknown concrete structure in order for a welder to be able to weld the bells of each piece of pipe.
Please advise on how to proceed.

SUGGESTION:

ANSWER: **Accept Suggestion:** ☐

Eric Zagol 9/18/2011 Demolish existing unknown concrete structure south of proposed alignment between STAs 17+25 to 17+75 as required at joints to facilitate welding. Expose unknown structure at joints, identify sections to be demolished and coordinate with TJPA Representative prior to structure demolition.

Jeff Thiel 9/21/2011 Pending approval by the TJPA, a CR will be issued.

U-0160	Location of Existing Sludge Force Main on Beale Street	Closed	07/29/2011	08/08/2011	08/02/2011	Potentially	☐

From: Webcor Construction LP Colin Azevedo **To:** Turner Construction Compan Gary Krutsch **Answered By:** AECOM Technical Servic Eric Zagol

Co-Author:

REQUEST:

M Squared has potholed for the sludge line on Mission Street at Beale at the location shown on the attached drawing. They have been unable to locate the existing 10" FM that they are to tie the new 12" sludge main into. The (E) Force Main is not in the location shown on the contract

SUGGESTION:

ANSWER: **Accept Suggestion:** ☐

Eric Zagol 8/2/2011 The existing 10" sludge FM in the vicinity bends down (~45+) to get under the existing 3'x5' sewer in Mission St. Record drawings show the depth of the 10" sludge FM where potholed at around 5', north of the 45 degree vertical bend.

Number	Subject	Status	Date Created	Date Required	Date Answered	Cost Impact	Proceed

drawings.
See attached pothole findings.
Please advise on how you would like to proceed.

However, record drawings may not be reliable as was the case at Howard and Beale St. when excavating for the Beale St. water main connection where the 10" sludge FM was found at a location different than shown on the drawings.

Pothole for the existing 10" sludge FM at Beale St. STA 7+08 (10' north of current location) to ensure connection location is north of the vertical bend. Submit pothole data for review.

U-0160.1 **Location of FM on Beale Street** **Closed** **08/05/2011** **08/05/2011** **08/09/2011** **Potentially** ☐

From: Webcor Construction LP Jonathan Flaming **To:** Turner Construction Compan Gary Krutsch **Answered By:** AECOM Technical Servic Eric Zagol

Co-Author:

REQUEST:

Per response to RFI U-0160 M Squared continued its potholing at Sta 7+08 on Beale Street.
M Squared potholed 7' long x 4' wide and 8' deep and M Squared was still unable to determine the location of the existing FM.

See attached pothole findings.

Please advise how M Squared should proceed.

SUGGESTION:

ANSWER: **Accept Suggestion:** ☐

Eric Zagol 8/9/2011 Unforeseen mismarked existing utility via the USA process. Pothole for existing sludge FM at the location shown in the attached sketch.

U-0160.2 **Location of FM on Beale Street** **Closed** **08/11/2011** **08/21/2011** **08/24/2011** **Potentially** ☐

From: Webcor Construction LP Jonathan Flaming **To:** Turner Construction Compan Gary Krutsch **Answered By:** AECOM Technical Servic Eric Zagol

Co-Author:

REQUEST:

M Squared potholed the location of the existing FM to the limits in the drawing provided in the
response to RFI U-0160.1. M Squared located the FM within this pothole.

See attached pothole findings.

SUGGESTION:

ANSWER: **Accept Suggestion:** ☐

Unforeseen condition, location of existing Sludge FM in the field varied from that shown on the drawings. Refer to SK-U-0021 and SK-U-0022 attached showing the revised horizontal and vertical alignment to accommodate connection to Sludge FM as located in the field.

Number	Subject	Status	Date Created	Date Required	Date Answered	Cost Impact	Proceed

Please direct M Squared how to proceed.

U-0161 **Unknown Concrete Structure in Investigative Trench** **Closed** **07/29/2011** **08/08/2011** **08/01/2011** **Potentially** ☐

From: Webcor Construction LP Colin Azevedo **To:** Turner Construction Compan Gary Krutsch **Answered By:** AECOM Technical Servic Eric Zagol

Co-Author:

REQUEST:

M Squared discovered an obstruction in the Beale Street investigative trench on station 2+55 approximately 25' west of centerline. The obstruction appears to be a 2'-3' thick concrete wall starting directly below the street base and extending down to an unknown depth. M Squared began demoing the obstruction yesterday believing it was part of a concrete encased PG&E trench. It is now known it is not part of any duct package.
Please advise on how you would like to proceed.

SUGGESTION:

ANSWER: **Accept Suggestion:** ☐

Eric Zagol 8/1/2011 Unknown non utility structure. A similar structure was found in AECOM's subsurface investigation trench at Beale Street Station 2+80.52 as shown in Specification Section 020630 Appendix A.

Protect in place. Non utility structures (i.e. walls) within zone of CDSM shoring wall and Transit Center footprint are to be removed by Buttress/Shoring/Excavation (BSE) contractor.

U-0162 **Manhole #602 Orientation** **Closed** **08/03/2011** **08/13/2011** **08/09/2011** **Potentially** ☐

From: Webcor Construction LP Jonathan Flaming **To:** Turner Construction Compan Gary Krutsch **Answered By:** AECOM Technical Servic Eric Zagol

Co-Author:

REQUEST:

The PG&E manhole at Station 2+55 is actually further south than is shown on the drawings. As a result of this the new water main on Natoma Street was installed in a different alignment than shown on the drawings. In order to excavate and shore for the new Manhole #602, without damaging the new water main M Squared will have to install the manhole at a different alignment than what is shown on the plans. M Squared will maintain the correct internal manhole dimensions per DPW standard drawings.

Please confirm this is acceptable.

SUGGESTION:

ANSWER: **Accept Suggestion:** ☐

Eric Zagol 8/9/2011 Construct sewer MH #602 to avoid existing water main as shown in the sketch provided. Maintain internal manhole dimensions, wall thickness, and steel reinforcement per DPW Standard Plans #87,182.

U-0163 **Utilities Demolition Plan** **Closed** **08/04/2011** **08/14/2011** **08/24/2011** **Potentially** ☐

From: Webcor Construction LP Jonathan Flaming **To:** Turner Construction Compan Gary Krutsch **Answered By:** AECOM Technical Servic Eric Zagol

Number	Subject	Status	Date Created	Date Required	Date Answered	Cost Impact	Proceed

Co-Author:

REQUEST:

The submittal TG04.4 - UG1020-024100B01 Utilities Demolition Plan was returned to M Squared marked "Revise & Resubmit".
The review note was: Please provide demo and sequencing plan per specification 02 41 00 Part 1.3A.

M Squared is unable to acquire the necessary utility abandonment schedules from the utility companies concerned.
Please provide us with a schedule showing when each of the utilities is to be abandoned by the relevant agencies. Once this has been provided M Squared will be able to provide the sequencing plan per the specifications.

SUGGESTION:

ANSWER: **Accept Suggestion:** ☐

The intent of the submittal comment was to reference specification section 024100 1.3A requiring the contractor to submit a utilities demolition and construction sequencing plan showing commencement, order, sequence and completion dates for approval prior to commencing with the demolition of existing utilities. The schedule submitted didn't include sequencing of the new work.

U-0164 **Beale Investigative Trench Limits** **Closed** **08/09/2011** **08/19/2011** **08/10/2011** **Potentially** ☐

From: Webcor Construction LP Jonathan Flaming **To:** Turner Construction Compan Gary Krutsch **Answered By:** Webcor Construction LP Jonathan Flaming

Co-Author:

REQUEST:

Sheet U-1008 shows the limits of the investigative trench on Beale Street (south of Mission St) to be 56' in total. 41.1' from center going west and 14.9' from center going east.
By going 14.9' from center with the eastern portion of the investigative trench M Squared will not encompass the existing water line and the existing AWSS line as they are outside the limits of the 14.9'.

Please direct M Squared how to proceed.

SUGGESTION:

ANSWER: **Accept Suggestion:** ☐

Eric Zagol 8/9/2011 Excavate investigative trench in accordance with contract documents as shown on U-1008. Demolish, cap and plug existing 12-inch water and 10-inch HPW (AWSS) as shown on Sheet U-1125.

U-0165 **Sewer Lateral to 92 Natoma** **Closed** **08/09/2011** **08/19/2011** **08/10/2011** **Potentially** ☐

From: Webcor Construction LP Jonathan Flaming **To:** Turner Construction Compan Gary Krutsch **Answered By:** AECOM Technical Servic Eric Zagol

Co-Author:

REQUEST:

While installing the new sewer on Natoma Street from 2nd to the shoring wall M Squared noticed that the sewer lateral to 92 Natoma is a new VCP lateral and has been installed in the last 12 months.

SUGGESTION:

ANSWER: **Accept Suggestion:** ☐

Eric Zagol 8/10/2011 It is acceptable to protect existing lateral and provide a permanent connection to the new 24-inch VCP main in lieu of replacing the lateral as shown on Plans.

Webcor/Obayashi Joint Venture

PROJECT MANAGEMENT - REQUEST AND ANSWERS LOG

30100 - Transbay Transit Center Project

Number	Subject	Status	Date Created	Date Required	Date Answered	Cost Impact	Proceed

The contract drawings show M Squared replacing all sewer laterals on Natoma from 2nd to the shoring wall, however this lateral appears like it does not require replacing.
Jason Chin (BCM) has been made aware of this issue.

Please confirm it is acceptable to leave this lateral in place and perform permanent connection to the new 24" VCP main.

Notes
Please provide credit for contract work not completed.

U-0166 **Broken Culvert Pipe Encountered in Utility Demolition Trench on Fremont St.** **Closed** **08/19/2011** **08/29/2011** **08/24/2011** **Potentially** ☐

From: Webcor Construction LP Colin Azevedo **To:** Turner Construction Compan Gary Krutsch **Answered By:** AECOM Technical Servic Eric Zagol

Co-Author:

REQUEST:
During trenching for demolition of the electrical ductbank along the east side of Fremont St Trinet crossed a 10" culvert pipe (@ Stn 5+05) from the existing catch basin on the east side of the street at Stn 5+05. The section of clay pipe exposed is cracked in several places and half the bell of an exposed joint is missing. Please advise if the owner will need the broken pipe section replaced before the trench is backfilled.

SUGGESTION:

ANSWER: **Accept Suggestion:** ☐
Replace damaged pipe section per direction of SFPUC inspector prior to trench backfill.

U-0167 **Culvert Run to MH#306** **Closed** **08/22/2011** **09/01/2011** **08/24/2011** **Potentially** ☐

From: Webcor Construction LP Jacob Giannandrea **To:** Turner Construction Compan Gary Krutsch **Answered By:** AECOM Technical Servic Eric Zagol

Co-Author: M Squared Construction, Inc. Aidan Foley

REQUEST:
See attached sketch.

Please confirm that it is acceptable to tie the 10" culvert run into the new MH#306 instead of running the culvert to the existing MH.

If this change is acceptable please advise if it is necessary to connect the existing 3'X5' sewer to MH 306 or if the existing sewer should be abandoned.

SUGGESTION:

ANSWER: **Accept Suggestion:** ☐
Connect new 10" SD culvert from CB#306 to SMH#306.

It is no longer necessary to connect existing 3'x5' brick sewer to SMH#306 as shown on U-5001 Detail 6. Abandon in place existing 3'x5' sewer and existing sewer MH at STA ~2+40 in accordance with CCSF DPW Standards.

Webcor/Obayashi Joint Venture

PROJECT MANAGEMENT - REQUEST AND ANSWERS LOG

30100 - Transbay Transit Center Project

Number	Subject	Status	Date Created	Date Required	Date Answered	Cost Impact	Proceed
U-0168	**TJPA Composite Utility Drawings**	**Closed**	**08/31/2011**	**09/10/2011**	**10/05/2011**	**Potentially**	☐

From: Webcor Construction LP Jacob Giannandrea **To:** Turner Construction Compan Gary Krutsch **Answered By:** Webcor Construction LP Colin Azevedo

Co-Author:

REQUEST:

Sheet MA - 12, Note 4 refers to TJPA Composite Utility Drawings for that area. M Squared currently has composite utility drawings for trade packages TG04.3, TG04.4, TG04.6, and TG04.1. M Squared does not have composite utility drawings for the TG04.2 project.

Please provide these drawings.

SUGGESTION:

ANSWER: **Accept Suggestion:** ☐

Eric Zagol 9/15/2011 TJPA does not have existing utility composite drawings for this area. SFDPW BOE has information and records provided by utilities in response to a notice of intent that can be provided to the TJPA for use as reference.

Jeff Thiel 10/3/2011 SFDPW BOE has provided the documents referenced in Eric Zagol's original response to this RFI.

These documents have been uploaded to Constructware and can be found in the following File Director path: Sitework & Utilities\5 Program Coord\30 Utilities\Notice of Intent\...

If the files are too large to open in Constructware they can also be found on the FTP site by following this link:

ftp://ftp.tjpa.org/Document%20Control/11011824/

Log In Instructions

1. Enter case-sensitive Username (public) and Password (PublicFTP1)

2. Select View\Open FTP Site in Windows Explorer

3. Drag file(s) to your desktop

Note: Please do not open files while logged in the FTP

U-0169	**CB#703 Location**	**Closed**	**09/01/2011**	**09/01/2011**	**09/07/2011**	**Potentially**	☐

From: Webcor Construction LP Colin Azevedo **To:** Turner Construction Compan Steve Cunningham **Answered By:** AECOM Technical Servic Eric Zagol

Co-Author:

REQUEST:

SUGGESTION:

ANSWER: **Accept Suggestion:** ☐

Number	Subject	Status	Date Created	Date Required	Date Answered	Cost Impact	Proceed

See attached photo showing conflict with location of new CB#703 and unknown underground concrete structures. They appear to be the same structures discovered in the investigative trenches on Beale Street.

Please confirm that it is acceptable to put the new CB in the same location as the existing CB which has been removed.

It is acceptable to construct CB#703 in the same location as existing.

Please coordinate the depth of the sewer culvert with proposed PG&E Phase II work as shown on U-2037. Submit proposed culvert profile with elevations of the existing PG&E electrical ducts as pot holed that are to be capped in Phase I (U-1125) and connected to in Phase II (U-2037).

U-0169.1 **CB#703 Location** **Closed** **11/15/2011** **11/25/2011** **11/23/2011** **Potentially** ☐

From: Webcor Construction LP Colin Azevedo **To:** Turner Construction Compan Steve Cunningham **Answered By:** AECOM Technical Servic Eric Zagol

Co-Author:

REQUEST:

- CB#703 was constructed in the location of the existing catch basin.
- See attached profile with culvert elevations. Culvert was installed deeper as several utilities were lower than shown on the drawings.
- Per M Squared¡¦s response to comments made in the RFI #U-0181, one of the duct banks shown on the drawings could not be located and was not as shown on the drawings. The alignment of the other duct bank is also different than what is shown on the drawings. (See attached) The depth of this duct bank at the point where M Squared capped it (3' south of the unknown concrete structure) was 6' 8" to the top. Its location/alignment beyond that point are unknown.

SUGGESTION:

ANSWER: **Accept Suggestion:** ☐

Please provide the invert elevation of constructed 10" culvert at CB#703. Based on the sketch provided in the RFI169.1, the 10" culvert was reversed slope. A culvert with reversed slope is not acceptable.

U-0170 **Duct bank Demo on Natoma** **Closed** **09/15/2011** **09/25/2011** **Potentially** ☐

From: Webcor Construction LP Colin Azevedo **To:** Turner Construction Compan Steve Cunningham **Answered By:**

Co-Author:

REQUEST:

M Squared has determined in the field that the duct bank highlighted which is to be demolished, is in fact

SUGGESTION:

Eric Zagol 9/18/2011 U-1110 indicates removal of existing PG&E duct to facilitate construction of the 8-

ANSWER: **Accept Suggestion:** ☐

Number	Subject	Status	Date Created	Date Required	Date Answered	Cost Impact	Proceed

underneath the curb and gutter. In order to demolish it per the plans M Squared will have to remove the curb and gutter and possibly a portion of sidewalk. See attached.

Please confirm whether you would like the duct bank removed and repour the curb and gutter after demo, or leave the duct bank in place and repair the portion of curb and gutter damaged while locating the duct bank.

inch Water and Sewer MH #301 . If existing duct as highlighted is not in conflict with new utilities then the existing duct may be abandoned in place.

Cap existing duct at RUP/BSE demarcation line per ASI 15.

Provide photos showing location of duct, duct, and curb and gutter damaged at the area indicated for repair for review.

Jeff Thiel 9/19/2011 Pending approval by the TJPA, a CR will be issued.

U-0170.1 **Duct Bank Demo on Natoma** **Closed** **09/21/2011** **10/01/2011** **10/05/2011** **Potentially** ☐

From: Webcor Construction LP Colin Azevedo **To:** Turner Construction Compan Steve Cunningham **Answered By:** AECOM Technical Servic Eric Zagol

Co-Author:

REQUEST:

In response to RFI #U-0170, see attached photos. Approx 20' of curb and gutter to be repaired. Sidewalk remained undamaged and does not require repair. Please advise if M Squared is to repair this portion of curb and gutter.

SUGGESTION:

ANSWER: **Accept Suggestion:** ☐

Eric Zagol 9/27/2011 Per response to RFI 170, please provide data (i.e. photos, survey and etc.) that supports the statement that the existing duct bank was found beneath the existing curb and gutter.

Contract plans show the existing duct south of the curb and gutter. The curb and gutter should have been protected in place during excavation. If curb and gutter to be protected in place was damage during the course of work please restore to match existing per 01 15 40 and contract documents.

U-0170.2 **Duct bank Demo on Natoma** **Closed** **11/18/2011** **11/28/2011** **12/01/2011** **Potentially** ☐

From: Webcor Construction LP Colin Azevedo **To:** Turner Construction Compan Steve Cunningham **Answered By:** Turner Construction Comp Jeff Thiel

Number	Subject	Status	Date Created	Date Required	Date Answered	Cost Impact	Proceed

Co-Author:

REQUEST:

M Squard has reviewed their photo logs and were unbale to locate any photos showing the ducktbank running under the curb and gutter. M Squared will proceed with providing a credit per CR U-027.

SUGGESTION:

ANSWER: **Accept Suggestion:** ☐

12/1/11 UPDATED RESPONSE

Corresponding CR for this work is CR U-050. Proceed with providing credit per CR U-050.

11/22/11 ORIGINAL RESPONSE

RFI does not pose a question and will be considered closed. M Squared shall proceed with providing a credit per CR U-027.

U-0171 **AWSS Ductile Iron Pipe** **Closed** **09/15/2011** **09/25/2011** **09/19/2011** **Potentially** ☐

From: Webcor Construction LP Colin Azevedo **To:** Turner Construction Compan Steve Cunningham **Answered By:** Turner Construction Comp Jeff Thiel

Co-Author:

REQUEST:

Please confirm that it is acceptable to use non-gauged ductile iron pipe for the AWSS system.

SUGGESTION:

ANSWER: **Accept Suggestion:** ☐

Jeff Thiel 9/19/2011 Michael Smith's (SFDPW) response, "Use at contractor's discretion. Contractor will be responsible for pipe being inserted into pipe bell ends, AWSS fittings, etc. and passing hydrostatic tests," dated and signed on 9/19/11 (see attached).

U-0172 **City Furnished Gate Valves** **Closed** **09/20/2011** **09/30/2011** **10/05/2011** **Potentially** ☐

From: Webcor Construction LP Colin Azevedo **To:** Turner Construction Compan Steve Cunningham **Answered By:** Turner Construction Comp Jeff Thiel

Co-Author:

REQUEST:

Specifications direct the contractor to provide a clear distance between the pipe flanges that consists of the gate valves laying length plus ½" not including the thickness of the gaskets to be installed.
In order to do this M Squared will need the dimensions of all City furnished gate valves.

SUGGESTION:

ANSWER: **Accept Suggestion:** ☐

Jeff Thiel 10/4/2011 Michael Smith's (SFDPW) response,

"Please refer to attached manufacturer's drawings for laying lengths of gate valves. These laying length dimensions were confirmed on 10/04/2011."

Number	Subject	Status	Date Created	Date Required	Date Answered	Cost Impact	Proceed

Please provide cut sheets for all valves provided by SFWD for this project.

dated and signed on 10/04/11 (see attached).

U-0173 **Valve control panel pick-up** **Closed** **09/24/2011** **10/04/2011** **10/05/2011** **Potentially** ☐

From: Webcor Construction LP Colin Azevedo **To:** Turner Construction Compan Steve Cunningham **Answered By:** Turner Construction Comp Jeff Thiel

Co-Author:

REQUEST:

M Squared's supplier, Control Systems West, have been coordinating with SFWD regarding which of the City's panels will be used for the TG04.2 project.
Tom Reid with SFWD has designated 3 panels to be used for this project.
These panels are to be picked up at SFWD, transported to Control Systems West for testing, programming etc and then returned to the job for use at 3 of the valve locations.
As the panels have been selected M Squared would like to begin the process of getting the panels to their supplier so they can begin the work.

Please provide the name and contact information for the person with whom M Squared can coordinate the pick up of the 3 units.

SUGGESTION:

ANSWER: **Accept Suggestion:** ☐

Jeff Thiel 9/26/2011 Contact Bill Gunn at (415) 706 0688 or WGunn@sfwater.org

Per Section 01 10 40, Coordination, Article 1.6 C, this RFI does not fall under the acceptable uses for an RFI as it is not being used for an interpretation of the Contract Documents.

RFIs used for questions regarding coordination will be rejected in the future.

U-0174 **AWSS Antenna location at Location 1** **Closed** **09/27/2011** **10/07/2011** **10/11/2011** **Potentially** ☐

From: Webcor Construction LP Colin Azevedo **To:** Turner Construction Compan Steve Cunningham **Answered By:** Turner Construction Comp Jeff Thiel

Co-Author:

REQUEST:

On drawing MA-20 regarding location 1 the antenna is shown to be mounted on a street light. However, on drawing MA-29 the same antenna is shown to be mounted on the enclosure.
Early conversations between Dick Borders (Control Systems West) and Kenny Chin (DPW) confirm that mounting the antenna on the enclosure is the preferred option.

SUGGESTION:

ANSWER: **Accept Suggestion:** ☐

Jeff Thiel 10/11/2011 Michael Smith's (SFDPW) response:

"The antenna shall be mounted on the controller cabinet for location No. 1. Disregard any reference to the mounting of the antenna on the (E) light post as shown on drawing MA-20. Mounting of antenna on to the controller cabinet shall be performed by the

Number	Subject	Status	Date Created	Date Required	Date Answered	Cost Impact	Proceed

Please confirm the antenna mounting location.

controller cabinet manufacturer."

Dated and signed on 10/11/11 (see attached).

U-0175 **Sludge line layout** **Closed** **09/27/2011** **10/07/2011** **11/08/2011** **Potentially** ☐

From: Webcor Construction LP Colin Azevedo **To:** Turner Construction Compan Steve Cunningham **Answered By:** AECOM Technical Servic Eric Zagol

Co-Author:

REQUEST:

The 12" sludge line cannot be installed along Mission Street as shown on the revised drawings due to the elevation and location of existing utilities and other unknown subsurface obstacles. Please see attached pothole information.
Please advise how you would like to proceed.

SUGGESTION:

ANSWER: **Accept Suggestion:** ☐

Eric Zagol 11/7/2011 Modifications to the 12" Sludge FM are currently being evaluated under ASI-018. Revised plans and specifications forthcoming following redesign and execution of ASI-018.

U-0176 **AWSS Conflict @ Location 7** **Closed** **09/28/2011** **09/28/2011** **Potentially** ☐

From: Webcor Construction LP Colin Azevedo **To:** Turner Construction Compan Steve Cunningham **Answered By:**

Co-Author:

REQUEST:

Due to the location of existing utilities it will not be possible to install the AWSS valve vault at the location shown on sheet MA 18 of the AWSS drawings. See attached pothole drawings from 09/26/11 and
09/27/11.
Please advise how you would like to proceed.

SUGGESTION:

Follow up responce recieved 10-19-2011:
****10/19/11 UPDATE****

Michael Smith's (SFDPW) response,

"Meeting with M Squared, SFWD, and SFDPW on 10/18/11. Contractor to have area from intersection of First/Howard Streets to 100 feet West on Howard Street marked for utilities (USA). We will then meet at site to determine clear area over AWSS main to pot hole for valve vault."

Dated 10/19/11 (see attached)

initial response received 10-17-2011:

ANSWER: **Accept Suggestion:** ☐

Number	Subject	Status	Date Created	Date Required	Date Answered	Cost Impact	Proceed

SFDPW to meet in the field with contractor and SFWD inspector to determine method to proceed. Will provide response with direction at this time.

NOTE: RB issued email 10-18-2011 requesting meeting.

U-0176.1 **AWSS Conflicts at Location #7** **Closed** **11/18/2011** **11/28/2011** **11/21/2011** **Potentially** ☐

From: Webcor Construction LP Colin Azevedo **To:** Turner Construction Compan Steve Cunningham **Answered By:** Webcor Construction LP Daniel Foudy

Co-Author:

REQUEST:

Per the response to RFI #U-0176 a field meeting was attended by Michael Smith and M Squared.
M Squared received direction to perform additional potholes further west of First St on Howard St.
Please see attached pothole findings.
Please advise how you would like to proceed.

SUGGESTION:

ANSWER: **Accept Suggestion:** ☐

Michael Smith's (SFDPW) response,
"Please refer to commnets on attached sheet.
SFDPW Response:
This conflict between the existing AWSS line and utilities at the original
design location are unforeseen field conditions due to incorrect information
being furnished to the City. Thus the motorized gate valve vault is being
relocated west of the original location. The contractor shall pothole 10-feet
west of Pothole No. 1B and 10-feet east of Pothole No. 1A to verify that there
is adequate clearance for installing a horizontal offset and motorized gate
valve vault the approximate location of Pothole No. 1A. Please notify the
engineer of the potholing schedule in order that we can request the majorutilities toattempt to identify the 4-inch steel pipe running parallel on Howard Street."
Signed and Dated 11/18/11 (see attached)

U-0176.2 **AWSS Conflicts @ Location 7** **Closed** **01/18/2012** **01/28/2012** **02/16/2012** **Potentially** ☐

From: Webcor Construction LP Colin Azevedo **To:** Turner Construction Compan Steve Cunningham **Answered By:** Turner Construction Comp Jeff Thiel

Co-Author:

Webcor/Obayashi Joint Venture

PROJECT MANAGEMENT - REQUEST AND ANSWERS LOG

30100 - Transbay Transit Center Project

Number	Subject	Status	Date Created	Date Required	Date Answered	Cost Impact	Proceed

REQUEST:

Per response to RFI#U-0176.1 M Squared performed additional potholing at Location 7.

Please see the attached pothole findings.

Please advise how you would like to proceed.

Note: The 4" Unknown Utility was confirmed to be an abandoned PG&E gas main. On 1/10/12 PG&E drilled the line and confirmed it to be abandoned.

SUGGESTION:

ANSWER: **Accept Suggestion:** ☐

Jeff Thiel 2/15/2012 Michael Smith's (SFDPW) Response.

"Furnish and install horizontal offset as shown on the attached drawing in order to locate the proposed concrete valve vault with minimum 6-inches clearance to the existing electrical duct bank running on the North side of Howard Street. Adjust nipple lengths as required between elbows and to connect into the ends of the existing cast iron pipes. Concrete valve vault and placement of motorized gate valve shall otherwise be shown on drawings MA-22 and MA-25.

Work for installation of new concrete valve vault and gate as show on Drawing MA-18 shall be deleted from the scope pending installation of the new valve vault as shown on the attached drawing."

Signed and dated 2/13/12.

Christina Young 2/15/2012 Pending TJPA approval, a CR will be issued.

U-0177	Ductbank Demo on Fremont St	Closed	10/04/2011	10/14/2011	10/10/2011	Potentially ☐

From: Webcor Construction LP Colin Azevedo **To:** Turner Construction Compan Steve Cunningham **Answered By:** AECOM Technical Servic Eric Zagol

Co-Author:

REQUEST:

See attached sketch.
The duct bank shown on Fremont Street to be demolished is in fact underneath the curb and gutter and portion of the sidewalk on Fremont St.
In order for M Squared to remove this duct bank it will require us to close the west sidewalk on Fremont St, demo and remove the sidewalk, remove the ductbank and then replace the sidewalk.
Currently the east sidewalk is closed also due to BBI activity.

SUGGESTION:

ANSWER: **Accept Suggestion:** ☐

Eric Zagol 10/6/2011 Coordinate with PG&E to confirm the duct indicated in the M2 sketch is PG&E's 6-6" duct from PG&E's EMH 7605.

Demolish and remove the 6-6" duct segment between STA ~2+40 (at the gutter) and the demarcation line south of shoring wall. The intent is to remove the segment within Natoma Street. The segment south of STA 2+40 (STA 2+40 to STA 1+85) can be abandoned in place.

Number	Subject	Status	Date Created	Date Required	Date Answered	Cost Impact	Proceed

Please advise how you would like to proceed.

Provide cap at STA 2+40 instead of STA 1+85 shown in the plans.

PG&E will break in and connect to the existing 6-6" duct at STA 1+85 as part of PG&E's Phase II relocations.

U-0178 **Sludge line layout on Mission between Beale and Main** **Closed** **10/04/2011** **10/04/2011** **11/08/2011** **Potentially** ☐

From: Webcor Construction LP Colin Azevedo **To:** Turner Construction Compan Steve Cunningham **Answered By:** AECOM Technical Servic Eric Zagol

Co-Author:

REQUEST:

Continued potholing on Mission Street between Beale and Main has revealed additional grade conflicts on the proposed alignment for the new 12" steel sludge line. Some of the utilities are not as shown on the drawings nor marked in the field by USAN. See attached sketches.

Please advise if M Sqaured is to continue potholing on Mission Street as it may be necessary to excavate the entire length of the trench between Beale and Main to locate and map all conflicts.

SUGGESTION:

ANSWER: **Accept Suggestion:** ☐

Eric Zagol 11/7/2011 Modifications to the 12" Sludge FM are currently being evaluated under ASI-018. Revised plans and specifications forthcoming following redesign and execution of ASI-018.

U-0179 **AWSS Main line conflicts at Location 7** **Closed** **10/05/2011** **10/15/2011** **11/21/2011** **Potentially** ☐

From: Webcor Construction LP Colin Azevedo **To:** Turner Construction Compan Steve Cunningham **Answered By:** Turner Construction Comp Jeff Thiel

Co-Author:

REQUEST:

Some of the existing utilities are not shown on the drawings and have been installed on top of the existing 12" AWSS line. Due to the proximity and volume of these utilities it is not possible to even hand excavate down to the existing AWSS line to verify its location and depth. Please see attached pothole information.
Please adivse.

SUGGESTION:

the following response received 10-17-2011 does provide direction in this matter:
It shall be the contractor's responsibility per the Contract Documents to perform the required potholing in order to identify the existing AWSS facilitieis prior to actual excavation.
Background utility information was provided by

ANSWER: **Accept Suggestion:** ☐

UPDATED RESPONSE (11/18/11)
Michael Smith's (SFDPW) response,
Refer to comments on attached sheet. These comments supercede
response provided on 10/17/11.
SFDPW Response:
This conflict between the existing AWSS line and

Number	Subject	Status	Date Created	Date Required	Date Answered	Cost Impact	Proceed

TJPA/consultatns and shall be verified in the field by contacting Underground Service Alert (USA). Direct conflicts oted during potholing shall be directed to the utility owner(s) for relocation/removal as required to perform the contract work.
NOTE: email from Rick Buellesbach 10-18-2011 requests an answer to the question.

utilities are unforeseen field conditions due to incorrect information being furnished to the City.
There are no design alternates at this location due to the necessity of removing the existing cross that was capped on the First Street side outlet to accommodate the utility relocation work for the proposed transit center.
The engineer will contact the owners of the utilities in conflict with the AWSS facility for resolution." Dated 11/18/11 (see attached)

U-0180 **Conflict with CB 305** **Closed** **10/10/2011** **10/20/2011** **10/17/2011** **Potentially** ☐

From: Webcor Construction LP Colin Azevedo **To:** Turner Construction Compan Steve Cunningham **Answered By:** Webcor Construction LP Richard Buellesbach

Co-Author:

REQUEST:

While excavating to install CB305 M Squared encountered a large unknown concrete structure. The concrete structure is in conflict with CB305. CB305 cannot be installed as planned. See attached photo.

Tsu-Ling with AECOM and Alberto with SFDPW reviewed the situation in the field and agreed the solution was to salvage the existing CB where CB 305 was to be installed. This work was performed on 10/7/2011 under the inspection of SFDPW.

Please confirm.

SUGGESTION:

ANSWER: **Accept Suggestion:** ☐

As determined during a site visit on 10/7/11 with M Squared, AECOM, SFDPW and W/O; the existing unforeseen condition, a large concrete structure, is in conflict with CB 305 and the installation of a new catch basin would require an extensive amount of unforeseen demotion.

In lieu of installing a new catch basin barrel to replace existing, modify the existing catch basin as follows:

1. Clean interior walls and bottom.
2. Apply 1/2" think uniform layer of mortar on interior walls and bottom.
3. Install cast iron trap.
4. Install pipe culvert and connect to MH#305 as shown in Plans.

New culvert size and invert shall match existing culvert at catch basin. Use ductile iron pipe if depth of cover is less than 3 feet.

U-0181 **Unknown subsurface structure on Beale** **Closed** **10/13/2011** **10/23/2011** **10/24/2011** **Potentially** ☐

From: Webcor Construction LP Colin Azevedo **To:** Turner Construction Compan Steve Cunningham **Answered By:** AECOM Technical Servic Eric Zagol

Number	Subject	Status	Date Created	Date Required	Date Answered	Cost Impact	Proceed

Co-Author:

REQUEST:

During M Squared's demo work on the West side of Beale Street at Sta 4+70 they uncovered an unknown subsurface structure. This structure appears to be an abandoned vault that has been filled with concrete. Please see attached photo.
M Squared ceased work on the removal of the six 6" electric duct banks 6' south of this structure. If they are to continue with the removal of this abandoned duct bank per sheet U-1125 of the contract drawings they will be forced to remove the subsurface structure.
Please advise.

SUGGESTION:

ANSWER: **Accept Suggestion:** ☐

Eric Zagol 10/24/2011 Please provide a plan showing the location and extent of unknown structure identified. Also indicate what portions of the existing PG&E electrical duct has been demolished to date.

U-0181.1 **Unknown subsurface structure at 301 Mission** **Closed** **11/18/2011** **11/28/2011** **11/23/2011** **Potentially** ☐

From: Webcor Construction LP Colin Azevedo **To:** Turner Construction Compan Steve Cunningham **Answered By:** AECOM Technical Servic Eric Zagol

Co-Author:

REQUEST:

See attached information as requested in response to RFI #U-0181.

SUGGESTION:

ANSWER: **Accept Suggestion:** ☐

Subsurface structure to remain. Cap locations as shown are acceptable. Please mark on as-built drawing as required by the contract documents.

U-0182 **AWSS Conflict with AT&T Vault at Location 2** **Closed** **10/24/2011** **11/03/2011** **11/21/2011** **Potentially** ☐

From: Webcor/Obayashi Joint Venture Jason Dunne **To:** Turner Construction Compan Steve Cunningham **Answered By:** Webcor Construction LP Daniel Foudy

Co-Author:

REQUEST:

On the north east side of the Mission Street and 2nd intersection the existing AWSS line is running through the floor of the AT&T vault. The removal of the existing 12" pipe and installation of the new 16" AWSS pipe will require the floor vault to be demolished and re-poured.

Please provide a detail for this work or a new alignment for the AWSS line so as to avoid this vault.

SUGGESTION:

ANSWER: **Accept Suggestion:** ☐

Michael Smith's (SFDPW) response,

"SFDPW Response:

This conflict between the existing AWSS line and utility vault are unforeseen field conditions due to incorrect information being furnished to the City.

The contractor shall pothole the alternate pipe alignment as shown on the attached sketch due to the existing conflict with the AT&T vault over/within the

Number	Subject	Status	Date Created	Date Required	Date Answered	Cost Impact	Proceed

present alignment of the AWSS pipe.

Notify engineer of pothole results for the proposed alternate pipe alignment."

Signed and Dated 11/18/11 (see attached)

U-0182.1 **AWSS Conflict with AT&T Vault at Location 2** **Closed** **03/28/2012** **04/07/2012** **05/16/2012** **Potentially** ☐

From: Webcor Construction LP Colin Azevedo **To:** Turner Construction Compan Steve Cunningham **Answered By:** Turner Construction Comp Jeff Thiel

Co-Author:

REQUEST:

The sketch provided in response to RFI U-0182 does not provide adequate information to perform additional potholing. Please provide additional information.

SUGGESTION:

ANSWER: **Accept Suggestion:** ☐

Jeff Thiel 3/29/2012 Michael Smith's (SFDPW) response,

"Please refer to the attached sketch dated 3/16/12 for potholing the location shown in order to verify the existing AWSS main and that there there are no utility conflicts in the proposed vault location. The original loaction for the vault is impacted by utilites."

Signed and Dated (3/29/12)

U-0183 **AWSS Valve Vault Conflict at Location 1** **Closed** **10/24/2011** **11/03/2011** **Potentially** ☐

From: Webcor Construction LP Colin Azevedo **To:** Turner Construction Compan Steve Cunningham **Answered By:**

Co-Author:

REQUEST:

The proposed valve vault at location 1 cannot be installed as per the plans due to utility conflicts encountered during potholing. See attached pothole info. These utilities are not shown on the contract drawings.
Please advise.

SUGGESTION:

Jeff Thiel 10/27/2011 Michael Smith's (SFDPW) response,

"Per your preliminary excavation results, please schedule a site visit with SFDPW and SFWD at site. At site visit, we will provide direction for vault installation."

ANSWER: **Accept Suggestion:** ☐

Number	Subject	Status	Date Created	Date Required	Date Answered	Cost Impact	Proceed

Signed and Dated 10/26/11 (see attached)

Kevin Chiu 10/27/2011 When final direction is provided via on site meeting per the RFI response, please submit a follow up RFI to confirm direction provided in the meeting.

U-0183.1 **AWSS Valve Vault Conflict at Location 1** **Closed** **11/16/2011** **11/26/2011** **11/18/2011** **Potentially** ☐

From: Webcor Construction LP Colin Azevedo **To:** Turner Construction Compan Steve Cunningham **Answered By:** Webcor Construction LP Daniel Foudy

Co-Author:

REQUEST:

Per the response to RFI#U-0183 a site visit was held with SFDPW and SFWD on 11/2/2011 to review the conflicts at location 1. Please provide direction based on this meeting.

SUGGESTION:

ANSWER: **Accept Suggestion:** ☐

Michael Smith's (SFDPW) response,

"Refer to comments on attached sheets. These comments supercede comments provided on 10/26/11 for RFI U-0183.

SFDPW Response:

Motorized gate valve vault: Per the preliminary excavation at Pothole No. 2 and the provided information, verify 2 1/2-inch steel for ownership and request owner should there not be adequate space to install vault due to the existing electrical duct bank shown in Pothole No. 3 drawing. Notify engineer to provide revised drawing(s) for AWSS fittings should vault need to be moved west. Notify engineer should vault interior dimensions need to be reduced after providing a minimum of 3-inches clearance with other utilities and the vault constructed with 12-inch thick walls.

Controller cabinet: Per the preliminary excavation at Pothole No. 7 and the provided information, install the controller cabinet concrete foundation at this site. Notify MCI that either their conduit can remain with the

Number	Subject	Status	Date Created	Date Required	Date Answered	Cost Impact	Proceed

controller foundation installed over the conduit with 4-inches clearance or that they can relocate their conduit as required. Modify bottom of controller foundation to accommodate a clearance of 4-inches should the conduit not be relocated.

Battery vault: Per the preliminary excavation at Pothole No.6 and the provided information, field verify the installation of the battery vault by locating the northern edge of the vault 2-feet towards the curb."

Signed and Dated 11/15/11 (see attached)

U-0183.2 **AWSS Valve Vault Location 1** **Closed** **12/02/2011** **12/12/2011** **12/15/2011** **Potentially** ☐

From: Webcor Construction LP Colin Azevedo **To:** Turner Construction Compan Steve Cunningham **Answered By:** Turner Construction Comp Jeff Thiel

Co-Author:

REQUEST:

Please see the attached letter regarding the response to RFI#U-0183.1.

Please provide direction.

SUGGESTION:

ANSWER: **Accept Suggestion:** ☐

Michael Smith's (SFDPW) response,

"Please see attached for revised response - U-183.2.

SFDPW Response:

Motorized Gate Valve Vault: Per the preliminary excavation at Pothole No. 2 and the provided information, verify 2 ½ inch steel for ownership and request owner to relocate the line outside of the valve vault footprint with 12-inches clearance. Should the valve vault still be in conflict with the existing electrical duct bank shown in Pothole No. 3, move vault location West along Market Street until valve vault has a minimum 12-inches clearance with the existing electrical duct bank.

Notify engineer to provide revised drawing(s) for AWSS fittings should valve vault need to be moved West.

Notify engineer should vault interior dimensions need

Number	Subject	Status	Date Created	Date Required	Date Answered	Cost Impact	Proceed

to be reduced after providing a minimum of 3 inches clearance with other utilities and the vault constructed with 12-inch thick walls."

Signed and dated 12/14/11 (see attached)

Turner will verify 2 1/2 steel for ownership.

U-0183.3 **Valve Vault Conflict at Location 1** **Closed** **01/23/2012** **02/02/2012** **02/08/2012** **Potentially** ☐

From: Webcor Construction LP Colin Azevedo **To:** Turner Construction Compan Steve Cunningham **Answered By:** Turner Construction Comp Jeff Thiel

Co-Author:

REQUEST:

Per the response to RFI #U-0183.2, M Squared Construction performed further potholing on the valve vault location on Market Street.
Please see attached findings of these potholes.
Please advise on how you would like M Squared to proceed with the vault construction/installation.

SUGGESTION:

ANSWER: **Accept Suggestion:** ☐

Jeff Thiel 2/6/2012
Michael Smith's (SFDPW) response,
"-Install concrete valve vault in locations as show on pothole No. 3A. Relocate 1 1/4" copper pipe as necessary during vault placement.
-Resubmit concrete vault drawings with dimensions to suite location and 9" thick walls for walls adjacent to other utilities. Provide minimum 6" clearance to water line and 4" to ductbank."
Signed and dated 02/06/12 (see attached)

U-0184 **AWSS Connection Point at Location 2.** **Closed** **10/24/2011** **11/03/2011** **11/01/2011** **Potentially** ☐

From: Webcor Construction LP Colin Azevedo **To:** Turner Construction Compan Steve Cunningham **Answered By:** Turner Construction Comp Jeff Thiel

Co-Author:

REQUEST:

The existing AWSS line at the connection point on 2nd Street north of Mission is a 10" pipe not a 12" as shown on drawing MA-13.
Please advise.

SUGGESTION:

ANSWER: **Accept Suggestion:** ☐

Jeff Thiel 10/27/2011 Michael Smith's (SFDPW) response,
"The line on Second Street North of Mission Street is a 10" CI line. Please update drawings. Drawing MA-21 in the contract package indicates the line as a 10" line."
Signed and Dated 10/26/11 (see attached)

Webcor/Obayashi Joint Venture

PROJECT MANAGEMENT - REQUEST AND ANSWERS LOG

30100 - Transbay Transit Center Project

Number	Subject	Status	Date Created	Date Required	Date Answered	Cost Impact	Proceed
U-0184.1	AWSS Connection Point at Location #2	Closed	12/02/2011	12/12/2011	12/14/2011	Potentially	☐

From: Webcor Construction LP Colin Azevedo **To:** Turner Construction Compan Steve Cunningham **Answered By:** Turner Construction Comp Jeff Thiel

Co-Author:

REQUEST:

Please see the attached letter regarding the response to RFI#U-0184.

Please provide direction.

SUGGESTION:

ANSWER: **Accept Suggestion:** ☐

Per Michael Smith's response to RFI U-0188 SFDPW is preparing revised AWSS drawings to include stationing information provided by AECOM. These revised drawings will address the issue raised in RFI U-0184 and provide clear direction. The drawings will be issued in the near future packaged with other revisions.

Jeff Thiel 3/22/2012 - RFI U-184.1: The response on 12/14/11 indicated that resolution would be provided via a revised AWSS drawing. This change was included on the stationed drawings provided under ASI 19.

U-0185	Existing Lateral to CB701	Closed	10/28/2011	11/07/2011	11/01/2011	Potentially	☐

From: Webcor Construction LP Colin Azevedo **To:** Turner Construction Compan Steve Cunningham **Answered By:** Webcor Construction LP Colin Azevedo

Co-Author:

REQUEST:

Sheet U-3024 shows and existing storm drain lateral connecting the back side of the existing catch basin which was replaced by CB #701. The details for CB #701, C/U-3033, do not show this existing lateral to be connected to CB #701. CB #701 has been installed per plan and the existing lateral was abandoned in place. It has been discovered that the abandon lateral in servicing an active catch basin in Lot N. See attached sketch.

Please advise.

SUGGESTION:

ANSWER: **Accept Suggestion:** ☐

Eric Zagol 10/31/2011 Lateral connections to CCSF catch basin barrels from property outside of the public right of way are prohibited . Owner/occupant of Parcel shall manage runoff in parcel and discharge to main sewer in accordance with CCSF regulations.

Coordinate with TJPA's field representative and occupant of Parcel.

U-0186	AWSS Conflict with Elec. Duct Banks & Vault @ Location 2	Closed	11/01/2011	11/01/2011	11/18/2011	Potentially	☐

From: Webcor Construction LP Colin Azevedo **To:** Turner Construction Compan Steve Cunningham **Answered By:** Webcor Construction LP Daniel Foudy

Co-Author:

REQUEST:

Due to the proximity of the electrical vault and the electrical concrete duct banks it is not possible to remove the existing 18" AWSS line and reconnect to the existing tee as shown on drawings MA-3 and MA-13. Please see

SUGGESTION:

ANSWER: **Accept Suggestion:** ☐

Michael Smith's (SFDPW) response,
"SFDPW Response:
This conflict between the existing AWSS line and utility vault/duct bank are unforeseen field conditions

Number	Subject	Status	Date Created	Date Required	Date Answered	Cost Impact	Proceed

attached pothole drawing. The restraining lugs on the east side of the tee are cast into the base of the electrical vault. The concrete duct bank on top of the AWSS line at the connection point combined with the electrical vault will not allow enough room for the plumber to burn out the old lead joint and cast the new one.
Please advise.

due to incorrect information being furnished to the City.
There are no design alternates at this location due to the necessity of removing theexisting 18"x10" reducer at this location in order to install the 16" fittings to maintain the proposed 16" pipe size upgrade on Mission Street. The engineer will contact the owner of the utility in conflict with the AWSS facility for resolution."
Signed and Dated 11/18/11 (see attached)

U-0187 **Conflicts with Controller Cabinet Foundation & Battery Enclosure at Location 1** **Closed** **11/18/2011** **11/28/2011** **11/21/2011** **Potentially** ☐

From: Webcor Construction LP Colin Azevedo **To:** Turner Construction Compan Steve Cunningham **Answered By:** Webcor Construction LP Daniel Foudy

Co-Author:

REQUEST:

Please confirm that M Squared it to install the control cabinet enclosure foundation (3'W x 3'L x 2'D) on top of the existing 10" and 8" steel lines shown on the attached sketch of pothole #6.
Please confirm that M Squared is to install the fiberglass battery enclosure on top of the utilities shown on the attached sketch of pothole #7. It will be necessary to hand dig around the existing utilities to install drain rock beneath the enclosure per the specifications.

SUGGESTION:

ANSWER: **Accept Suggestion:** ☐

Michael Smith's (SFDPW) response,
"Refer to SFDPW response provided on 11/16/11 to RFI U-0183.(1)."
Signed and Dated 11/18/11 (see attached)
RFI U-0183.1 Response included below-
"SFDPW Response:
Motorized gate valve vault: Per the preliminary excavation at Pothole No. 2 and the provided information, verify 2 1/2-inch steel for ownership and request owner should there not be adequate space to install vault due to the existing electrical duct bank shown in Pothole No. 3 drawing. Notify engineer to provide revised drawing(s) for AWSS fittings should vault need to be moved west. Notify engineer should vault interior dimensions need to be reduced after providing a minimum of 3-inches clearance with other utilities and the vault constructed with 12-inch thick walls.
Controller cabinet: Per the preliminary excavation at Pothole No. 7 and the provided information, install the controller cabinet concrete foundation at this site. Notify MCI that either their conduit can remain with the controller foundation installed over the conduit with 4-inches clearance or that they can relocate their conduit as required. Modify bottom of controller foundation to accommodate a clearance of

Number	Subject	Status	Date Created	Date Required	Date Answered	Cost Impact	Proceed

4-inches should the conduit not be relocated.
Battery vault: Per the preliminary excavation at Pothole No.6 and the provided information, field verify the installation of the battery vault by locating the northern edge of the vault 2-feet towards the curb."

U-0187.1 **Conflicts with Controller Cabinet Foundation and Battery Enclousure at Location # Closed** **12/02/2011** **12/12/2011** **12/15/2011** **Potentially** ☐

From: Webcor Construction LP Colin Azevedo **To:** Turner Construction Compan Steve Cunningham **Answered By:** Turner Construction Comp Jeff Thiel

Co-Author:

REQUEST:

Please see the attached letter regarding the response to RFI#U-0187.

Please provide direction.

SUGGESTION:

ANSWER: **Accept Suggestion:** ☐

Michael Smith's (SFDPW) response,

"Please see attached for revised response - U-187.1.

SFDPW Response:

Controller Cabinet: Per the preliminary excavation at Pothole No. 7 and the provided information, install the controller cabinet and the concrete foundation at this site instead of the battery vault assembly that was shown here originally in the Contract Documents.

Notify MCI that either their conduit can remain with the controller foundation installed over the conduit or MCI has the option to relocate their conduits away from the concrete foundation footprint. Should MCI not want to relocate, reduce thickness of concrete foundation over MCI conduit to provide a minimum of 4-inches clearance between the conduit outside diameter and the bottom of the foundation.

Battery Vault: Per the preliminary excavation at Pothole No. 6 and the provided information, install the battery vault at this site instead of the controller cabinet that was shown here originally in the Contract Documents.

Field verify (pothole) 2-feet from face of existing curb to determine if the Northern edge of the battery vault can be installed approximately 2-feet from curb

Number	Subject	Status	Date Created	Date Required	Date Answered	Cost Impact	Proceed

instead of 5-feet from curb in order to provide clearance with 8-inch steel line. Notify engineer of pothole results prior to installation."

Signed and Dated 12/14/11 (see attached)

Turner will notify MCI.

U-0187.2 **Conflicts with Controller Cabinet and Battery @ Location 1** **Closed** **01/23/2012** **02/02/2012** **03/21/2012** **Potentially** ☐

From: Webcor Construction LP Colin Azevedo **To:** Turner Construction Compan Steve Cunningham **Answered By:** Turner Construction Comp Steve Cunningham

Co-Author:

REQUEST:

In response to RFI # U-0187.1 (Revised Response to RFI# U-0187 ON 12/14/11)
- See attached pothole data from additional potholing at this location.
- During initial discussions with MCI/Verizon M Squared informed them of the intent to install units on their utility. They requested a letter from the owner highlighting the intent. Please confirm if it is acceptable to install a unit on their utility.
Please provide direction on the locations of the battery vault and controller cabinet taking into consideration all current utilities in place.

SUGGESTION:

ANSWER: **Accept Suggestion:** ☐

Jeff Thiel 3/16/2012 Michael Smith's (SFDPW) response,

"Please see attached wording for letter to owner of utility.

Locate North most edge of battery vault cover 24" from face of curb or back from face of curb to remain in "brick" area."

Signed and Dated 2/14/12 (Letter Wording) and 3/15/12 (Battery Placement)

The attached letter addressed to MCI/Verizon was sent to Pam Brown on 3/14/12.

U-0188 **Control Stations on AWSS Drawings** **Closed** **11/18/2011** **11/28/2011** **11/21/2011** **Potentially** ☐

From: Webcor Construction LP Colin Azevedo **To:** Turner Construction Compan Steve Cunningham **Answered By:** Turner Construction Comp Kevin Chiu

Co-Author:

REQUEST:

At present M Squared has set up control points along

SUGGESTION:

ANSWER: **Accept Suggestion:** ☐

Michael Smith's (SFDPW) response,

Number	Subject	Status	Date Created	Date Required	Date Answered	Cost Impact	Proceed

Mission Street. These stations were based on a continuation of survey points used on Mission Street for the TG04.6-Sludge Line Project.
The City designed AWSS Drawings do not have these stations on them. Please provide an updated set of AWSS Drawings with the project stations marked on them so it will allow M Squared to accurately document field conditions and as built the necessary information.

"SFDPW is currently preparing revised AWSS DWGS with stationing information as provided by AECOM. We anticipate the final set of stamped/signed DWGS prior to the end of November 2011."
Signed and Dated 11/18/11 (see attached)

Jeff Thiel 3/22/2012: RFI U-188 included a request for stationed drawings. It was responded to on 11/18/11 and resolved by ASI 19 when the stationed drawings were provided.

U-0189 **First & Howard Utility Conflicts, Location 7 Complete Pothole Data** **Closed** **12/02/2011** **12/12/2011** **07/03/2012** **Potentially** ☐

From: Webcor Construction LP Colin Azevedo **To:** Turner Construction Compan Steve Cunningham **Answered By:** Turner Construction Comp Jeff Thiel

Co-Author:

REQUEST:

While potholes #2 & #3 have been addressed in a previous RFI (RFI#U-0176), other potholes carried out in Location 7 exposed various utilities that are not shown on the contract documents. Other utilities were not in the locations indicated on the contract documents.

See attached pothole data from potholes #1 through #11 at location 7.

Please clarify if the utilities will be removed, protected in place or relocated.

SUGGESTION:

ANSWER: **Accept Suggestion:** ☐

The issues outlined in the attached pothole data have been addressed and resolved via coordination meetings, CRs, and other RFI responses.

The CRs include U-080R1, U-088, and U-088A as well as RFIs U-0176, U-0176.1, U-0176.2, U-0179, U-0197, U-0197.1, U-0197.2, U-0199, U-0200, and U-0200.1.

U-0190 **Fire Hydrant Location on Mission @ First** **Closed** **01/10/2012** **01/20/2012** **01/19/2012** **Potentially** ☐

From: Webcor Construction LP Colin Azevedo **To:** Turner Construction Compan Steve Cunningham **Answered By:** Turner Construction Comp Jeff Thiel

Co-Author:

REQUEST:

While potholing for the new Hydrant and associated piping in the sidewalk on Mission Street (see attached), M Squared's crews damaged the roof of the basement to Portico Restaurant, 88 First Street (see attached photos). This basement structure was not noted on the plans and is

SUGGESTION:

ANSWER: **Accept Suggestion:** ☐

Michael Smith's (SFDPW) response,

-Repair of sidewalk at pothole location: Refer to attached directions from William Liang- SFPDW/EST for repair method.

Number	Subject	Status	Date Created	Date Required	Date Answered	Cost Impact	Proceed

a differing site condition.

The roof of the basement will now need to be repaired. Please provide direction and repair details for this work.

It is not possible to locate the fire hydrant in this area due to the presence of the basement. The existing hydrant has a column poured into the structure of the basement (see attached).

Please advise on how you would like to proceed.

-New Hydrant lateral shall be located in the (E) hydrant alignment. (E) Hydrant is located in an areaway. Refer to AWSS standard drawings for details. SFDPW will provide revised drawing for (N) lateral prior to construction.

Signed and Dated 01/18/12

Response for Concrete Repair per William Liang (SFDPW) .

Chip out concrete inside of saw-cut area; do not damage (E) rebars.
If (E) rebars are found to have been cut during the saw-cutting process, chip out enough concrete around the cut rebars for installation of Lenton Quick-Wedge Splicing system at both ends; splice new rebars with size to match (E). If (E) rebars are found to be intact, proceed to Step 3.
Install keyway around perimeter of opening (keyway shall be a minimum 1.5 (below top of slab), install swellable water stop (Greenstreak Hydrotite CJ -0725) in keyway.
Form and pour with Emaco S66 CI by BASF. Perform surface preparation and provide curing in accordance with manufacturers recommendations. Note: continuous special inspection shall be provided for the concrete pour."

U-0190.1 **Fire Hydrant Location on Mission @ First** **Closed** **01/25/2012** **02/04/2012** **01/26/2012** **Potentially** ☐

From: Webcor Construction LP Colin Azevedo **To:** Turner Construction Compan Steve Cunningham **Answered By:** Turner Construction Comp Jeff Thiel

Co-Author:

REQUEST:

On 1/24/2012 M Squared began repairing the basement roof per the response to RFI U-0190. SFDPW engineer William Liang came out and review the progress that day and provided alternate direction in the field. Please provide this direction in writing so work may resume.

SUGGESTION:

ANSWER: **Accept Suggestion:** ☐

No alternate direction was given at 1/24/12 site visit by SFDPW engineer. SFDPW provided information and direction to supplement the direction given in response to RFI U-0190 based on his observations in the field. Existing rebar was found to be uncut but lacking

Number	Subject	Status	Date Created	Date Required	Date Answered	Cost Impact	Proceed

sufficient concrete cover. Please see supplementary instruction below.

Per William Liang of SFDPW,

1. Chip out concrete inside of saw-cut area; do not damage (E) rebars,

2. (E) main rebars are found to be intact but have insufficient bottom concrete cover; (E) wire-mesh above the main rebars are found to have been cut during the sawcut process. Install 3-#4 dowels @ 12"o.c. max set in epoxy along three sides w/ 6" embedment into (E) concrete (see attached photo), maintain 6" max from corners, epoxy shall be SIMPSON SET-XP or HILTI HIT-RE500-SD.

3. Install swellable waterstop (Greenstreak Hydrotite CJ-0725) above installed dowels, provide min 1.5" concrete cover.

4. Form and pour w/ Emaco S66 CI by BASF (see attached cut sheets). Perform surface preparation and provide curing in accordance w/ manufacturer's recommendations.
Note continuous special inspection shall be provided for the dowel installation and concrete pour.

ORIGINAL RFI U-0190 RESPONSE FOR REFERENCE

1. Chip out concrete inside of saw-cut area; do not damage (E) rebars.
2. If (E) rebars are found to have been cut during the saw-cutting process, chip out enough concrete around the cut rebars for installation of Lenton Quick-Wedge Splicing system at both ends; splice new rebars with size to match (E). If (E) rebars are found to be intact, proceed to Step 3.

Number	Subject	Status	Date Created	Date Required	Date Answered	Cost Impact	Proceed

3. Install keyway around perimeter of opening (keyway shall be a minimum 1.5" below top of slab), install swellable water stop (Greenstreak Hydrotite CJ -0725) in keyway.
4. Form and pour with Emaco S66 CI by BASF. Perform surface preparation and provide curing in accordance with manufacturers recommendations. Note: continuous special inspection shall be provided for the concrete pour."

U-0191 **Power Source at Location #1, #2 & #7** **Closed** **01/16/2012** **01/26/2012** **02/27/2012** **Potentially** ☐

From: Webcor Construction LP Colin Azevedo **To:** Turner Construction Compan Steve Cunningham **Answered By:** Webcor Construction LP Jeff Heath

Co-Author:

REQUEST:

In order for the controller enclosures for the motorized gate valves at Location #1, #2 and #7 to be operational a power source will need to be provided at each enclosure location.

Please confirm that the owner has applied to PG&E for the power sources at these locations and advise on the status of these connections.

SUGGESTION:

ANSWER: **Accept Suggestion:** ☐

Revised Responce 2/27/2012

Jeff Thiel 2/23/2012 The TJPA has completed its application to SFPUC for power to AWSS facilities. The SFPUC has requested a minimum of four (4) weeks to make these connections. Sub contractor to coordinate meeting with SFPUC and PG&E prior to start of work.

Below is the MOP for coordinating power source connection as confirmed by Mathew Ho of the SFPUC.

1. Contractor to schedule coordination meeting with PG&E, PUC (Mathew Ho or Michael Mack) and Turner. Contractor to provide a construction schedule and set up Pre-con with PG&E (Per SFPUC request to inform them when Contractor expects to trench for electrical service and have the power pedestals installed)
2. Contractor to schedule PG&E trench inspection which is needed after contractor installs conduit but before closing the trench so that PG&E can prove the conduit via mandrel test (30days notice needed, Call PG&E inspection # 415-695-7519 and provide PM# located on drawing and provide PG&E job owner

Number	Subject	Status	Date Created	Date Required	Date Answered	Cost Impact	Proceed

contact as Matt Herron)
3. PG&E to pull cables
4. Schedule a DBI inspection of the meter pedestal (Dave Green DBI 415-558-6654, forward PG&E a copy of the DBI green tag)
5. Once green tag is applied, PG&E to set up meter and then energize.
==========
==========
Origanal Response 1/26/2012

The TJPA has completed its application to SFPUC for power to AWSS facilities.
The SFPUC has requested a minimum of four (4) weeks to make these
connections. Sub contractor to coordinate meeting with SFPUC and PG&E prior
to start of work.

U-0191.1 **Power Source at Location #1, #2 & #7** **Closed** **03/21/2012** **03/31/2012** **05/01/2012** **Potentially** ☐

From: Webcor Construction LP Colin Azevedo **To:** Turner Construction Compan Steve Cunningham **Answered By:** Transbay PMPC Cory Traylor

Co-Author:

REQUEST:

Recent meeting on the AWSS project resulted in the response to RFI#U-0191 being revised to include a procedure to be followed once the controller cabinets were ready to accept power. However, what was sent in the revised response was a new scope of work followed by the mentioned procedure.

The contract drawings show M Squared's work beginning at pull boxes and going to the controllers. M Squared's interpretation of the drawings sent in the revised response to RFI#U-0191 is the scope of work that goes from the pull boxes to PG&E manholes. This is unclear because the PG&E drawings are not comparable with the contract drawings.

Please clarify the intent and scope of the PG&E drawings. Please clarify how the PG&E drawings correlate with the contract drawings.

SUGGESTION:

ANSWER: **Accept Suggestion:** ☐

Cory Traylor 5/1/2012 In accordance with PG&E Greenbook standards and practices, power connections for motorized gate valve equipment shall be installed at the referenced locations per the attached PG&E sketches, directions and requested equipment requirements. Work not outlined in the attached documents shall take place per contract drawings.

Final coordination for connections shall take place in the field per note 7 on drawings MA-29 and MA-31.

Connecting for power per the attached PG&E sketches/direction has been approved by SFDPW-Bureau of Engineering.

Webcor/Obayashi Joint Venture

PROJECT MANAGEMENT - REQUEST AND ANSWERS LOG

30100 - Transbay Transit Center Project

Number	Subject	Status	Date Created	Date Required	Date Answered	Cost Impact	Proceed
U-0191.2	Amperes Interrupting Capacity (AIC) at AWSS Location #1 (Market St.)	Closed	05/23/2012	06/02/2012	06/21/2012	Potentially	☐

From: Webcor Construction LP Jackson Tukuafu **To:** Turner Construction Compan Steve Cunningham **Answered By:** Transbay PMPC Cory Traylor

Co-Author:

REQUEST:

Please refer to RFI U0191.1 and the attached drawings MA-1, MA-29 and MA-31.

1. As per response to RFI U-0191.1, the SFDPW-Bureau of Engineering sketches and letter for the AIC only addresses the motorized gate valve number 21 at Location #7. As new power service will be required at gate valve number 2, Location 1, please provide an AIC letter for this location.

2. Please provide a conformed drawing of the the PG&E clarification sketches provided in RFI U-0191.1 by revising the drawing sheet MA-29 and MA-31, respectively. It is unclear from the PG&E sketches whether the scope from the original contract drawings (MA-29 and MA-31) have changed.

SUGGESTION:

ANSWER: **Accept Suggestion:** ☐

Request 1. - Please see attached file for Location 1 labeled "555 Market St. AIC.pdf" letter.
Request 2. - Please see attached PDF file "comments_transbay.pdf" containing comments from Matt Herron of PG&E clarifiying the scope of work for the PG&E power connection points at locations #1 and #7.
Also, please see information on location of manhole #5414 below per PG&E Matt Herron below;"The Vault 5414 is in the South Side, sidewalk of Market St. about 10' East of the West Property of 555 Market St. There are large vaults IFO 555 Market St. identified as 7300-P/7301-P/7302-P, Vault 5414 is roughly 30' West of those vaults."

Please contact Matt Herron of PG&E when sub-contractor is ready for a PG&E crew to mark the location for the core. Also, Please give Matt Herron two weeks notice when sub-contractor would like to core drill into the vault. This two weeks notice is to allow PG&E to set up and schedule a crew to standby for the core.

U-0191.3	Amperes Interrupting Capacity (AIC) at AWSS Location #1 (Market St.)	Closed	06/28/2012	07/08/2012	07/16/2012	Potentially	☐

From: Webcor Construction LP Jackson Tukuafu **To:** Turner Construction Compan Gary Krutsch **Answered By:** Webcor Construction LP Jackson Tukuafu

Co-Author: M Squared Construction, Inc. Aidan Foley

REQUEST:

The response to RFI #U-0191.2 does not answer the question posed in the RFI.

As mentioned in the previous RFI there appears to be a difference in the PG&E drawings provided in the original response and the contract drawings.

See attached M Squared's interpretation of these PG&E drawings. Please confirm if this interpretation is correct.

SUGGESTION:

ANSWER: **Accept Suggestion:** ☐

7/16/2012 Kenny Chin's (SFDPW) response,

"The interpretation of MA-31 is correct. The contractor shall route the conduit from the meter enclosure to vault 1813. The interpretation of MA-29 is correct. The contractor shall route the conduit from meter enclosure to vault 5414 but the contractor shall find out with PG&E which one is the exact vault 5414."

U-0192	AWSS Strong Backs	Closed	01/18/2012	01/28/2012	02/08/2012	Potentially	☐

From: Webcor Construction LP Colin Azevedo **To:** Turner Construction Compan Steve Cunningham **Answered By:** Turner Construction Comp Jeff Thiel

Number	Subject	Status	Date Created	Date Required	Date Answered	Cost Impact	Proceed

Co-Author:

REQUEST:

Current project drawings show that this project requires two (2) 14¿ Strong Backs and two (2) 10¿ Strong Backs to be used at different locations.
Olympic Foundry does not produce strong backs and were unable to include them in the order to M Squared. M Squared has contacted several sources trying to locate the strong backs but have yet to find a supplier.
Please advise if it is possible to purchase these from the City stock.
If this is not possible M Squared will have no other option but to have them manufactured at a steel mill and this may take a considerably long time due to the lead time in the specialized steel.

SUGGESTION:

ANSWER: **Accept Suggestion:** ☐

Jeff Thiel 2/3/2012 Response per Michael Smith (SFDPW),

-"We have been advised that the SFWD does not have the requested strong backs in their inventory.

-Typically strong backs were torch cut at local machine shops that handle larger fittings. Suggest contacting other contractors who have performed AWSS work for sources."

Signed and dated 02/01/12

U-0193	2nd to 1st St - Various Conflicts	Closed	03/08/2012	03/18/2012	03/21/2012	Potentially ☐

From: Webcor Construction LP Colin Azevedo **To:** Turner Construction Compan Steve Cunningham **Answered By:** Turner Construction Comp Steve Cunningham

Co-Author:

REQUEST:

See attached sheet which details the conditions discovered in the potholing operations between 2nd Street and 1st Street.
Please use Submittal TG04.2-024.1 for reference.
Please provide direction on how to proceed at each location.

SUGGESTION:

ANSWER: **Accept Suggestion:** ☐

Jeff Thiel 3/20/2012 Michael Smith's (SFDPW) response,

"Please see response on attached sheets for conflicts at particular station numbers as listed in this RFI."

Signed and Dated (3/20/12)

U-0194	AWSS Strong Back Dimensions	Closed	03/13/2012	03/23/2012	03/21/2012	Potentially ☐

From: Webcor Construction LP Colin Azevedo **To:** Turner Construction Compan Steve Cunningham **Answered By:** Turner Construction Comp Steve Cunningham

Co-Author:

REQUEST:

SUGGESTION:

ANSWER: **Accept Suggestion:** ☐

Number	Subject	Status	Date Created	Date Required	Date Answered	Cost Impact	Proceed

On the detail for the strong backs on the San Francisco Standard AWSS Plans M Squared has discovered an error in the dimensions for the 14" strong back. Dimension C (outside diameter) is smaller than dimension B (inside diameter). See attached.

M Squared believes the OD should be 27.37". Please confirm.

Jeff Thiel 3/14/2012 Michael Smith's (SFDPW) response,

"M Squared is correct. Thank you for pointing this out. We will update our drawing."

Signed and dated 3/14/12. (See Attached)

U-0195 **Parking Sensors on Mission** **Closed** **03/13/2012** **03/23/2012** **04/16/2012** **Potentially** ☐

From: Webcor Construction LP Colin Azevedo **To:** Turner Construction Compan Steve Cunningham **Answered By:** Turner Construction Comp Jeff Thiel

Co-Author:

REQUEST:

M Squared has discovered that either SF Park or MUNI have installed what appear to be sensors in the street surface along Mission Street. See photo attached.

They existing between Fremont and Beale in particular.

As the AWSS line is installed along Mission St from 2nd to Main these sensors will be in conflict. Please confirm these sensors will be removed prior to trenching.

SUGGESTION:

ANSWER: **Accept Suggestion:** ☐

Jeff Thiel 4/12/2012 Per email conversation with Alex Demisch of the SFpark Project (SFMTA), any parking sensors found on Mission Street from 2nd Street to Main Street are inactive. SFPark's vendor plans to remove these parking sensors late April or early May of this year 2012. SFPark realizes TJPA plans to conduct AWSS construction work in the upcoming months and has asked if it was possible to for the TJPA sub-contractor, once AWSS construction begins, to separate the parking sensor equipment from other construction debris so that SFPark may dispose electronic waste properly if there are any parking sensors still remaining. However, if the parking sensors cannot be separated then SFPark understands they will end up being demolished from TJPA AWSS construction work.

U-0196 **AWSS Pipe Bedding Material** **Closed** **04/02/2012** **04/12/2012** **04/09/2012** **Potentially** ☐

From: Webcor Construction LP Colin Azevedo **To:** Turner Construction Compan Steve Cunningham **Answered By:** Turner Construction Comp Jeff Thiel

Co-Author:

REQUEST:

SUGGESTION:

ANSWER: **Accept Suggestion:** ☐

Number	Subject	Status	Date Created	Date Required	Date Answered	Cost Impact	Proceed

Section 02225-2 2.2 specifies that the bedding material for the new AWSS piping shall be crushed rock, however section 02723-18 2.12 contradicts this by specifying the bedding shall be pea gravel.
Please clarify.

Jeff Thiel 4/9/2012 Refer to submittal package TG0402-029 - Pipe Bedding Pea Gravel for approved AWSS pipe bedding material.

U-0197 **AWSS/PG&E Phase 2 Duct Conflict** **Closed** **04/05/2012** **04/16/2012** **04/16/2012** **Potentially** ☐

From: Webcor Construction LP Colin Azevedo **To:** Turner Construction Compan Steve Cunningham **Answered By:** Turner Construction Comp Jeff Thiel

Co-Author:

REQUEST:

See attached photo. M Squared discovered a conflict on 4/4/12 at 11.10am while excavating to remove the existing AWSS Main at Howard and First.

PGE's new Phase 2 duct package is sitting directly on top of the existing AWSS main at First and Howard intersection. The top and sides of the duct bank are encased in concrete however the PVC conduits are not encased on the bottom and the PVC Conduits are currently touching the AWSS Main at this location.

As a result M Squared is unable to remove the existing AWSS main from this point east.

Please advise on how you would like to proceed.

SUGGESTION:

ANSWER: **Accept Suggestion:** ☐

Jeff Thiel 4/12/2012

Please confirm that the Phase 2 PG&E duct package that is in conflict with the AWSS main was installed at the correct elevation per the approved Phase 2 Utility plans.

U-0197.1 **AWSS/PG&E Phase 2 Duct Conflict Location 7** **Closed** **04/16/2012** **04/26/2012** **04/17/2012** **Potentially** ☐

From: Webcor Construction LP Colin Azevedo **To:** Turner Construction Compan Steve Cunningham **Answered By:** Turner Construction Comp Jeff Thiel

Co-Author:

REQUEST:

The Phase 2 PG&E plans only provide minimum depths and clearances. It appears the Phase 2 ducts were installed in accordance with the minimum depth requirement but not the minimum clearance requirement. Please confirm this with PG&E.

Regardless, the AWSS main can not be reinstalled per

SUGGESTION:

ANSWER: **Accept Suggestion:** ☐

Michael Smith's (SFDPW) response,

"Per a site inspection this morning with SFWD, M2, Turner, and Webcor/Obayashi, the clearance conflict between the recently installed PG&E duct bank and the existing 12-inch cast iron AWSS main was confirmed. The duct bank conduits are in direct

Number	Subject	Status	Date Created	Date Required	Date Answered	Cost Impact	Proceed

plan and maintain minimum clearance required in the AWSS specification. Please advise how M Squared is to proceed.

contact with the existing AWSS pipe.

The two options to rectify this situation include:

1.) Request that PG&E or their contractor vertically relocate the recently installed duct bank in order that there is the required 12-inch clearance between the two utilities.

2.) Realign the proposed replacement AWSS main either over or under the PG&E duct bank by the installation of a vertical offset.

Should option No. 2 be selected, please advise as soon as possible since revision drawing(s) for the vertical offset will need to be prepared prior to the installation of the vertical offset."

Signed and Dated 4/11/12.

The phase two duct bank was not installed per PG&E Green Book requirements for minimum clearance between utility services, and the contractor failed to properly coordinate utility installation.

Work related to this RFI response shall be performed at no additional cost to the owner.

U-0197.2 **AWSS-PG&E Phase 2 Duct Conflict** **Closed** **04/23/2012** **05/03/2012** **05/02/2012** **Potentially** ☐

From: Webcor Construction LP Colin Azevedo **To:** Turner Construction Compan Steve Cunningham **Answered By:** Turner Construction Comp Jeff Thiel

Co-Author:

REQUEST:

Through detailed analysis and discussions with PG&E during the weekly AWSS coordination meetings it has

SUGGESTION:

ANSWER: **Accept Suggestion:** ☐

Jeff Thiel 4/23/2012 Michael Smith¿s (SFDPW) response,

Number	Subject	Status	Date Created	Date Required	Date Answered	Cost Impact	Proceed

been determined that it would be infeasible to relocate the PG&E duct bank as requested in option one in the response to RFI#U-0197.1.

Please provide details for realigning the AWSS main referenced in option two in the response to RFI#U-0197.1.

"The contractor shall install a vertical offset under the PG&E duct bank using four (4) 22 ½ - degree elbows as required to maintain a minimum 16-inches vertical clearance between the new 12-inch ductile iron AWSS main and the recently installed PG&E duct bank. Please refer to the attached sketch."

Signed and dated 4/16/12

This work shall be performed at no additional cost to the TJPA.

U-0198 **Vault Drainage** **Closed** **04/09/2012** **04/09/2012** **04/16/2012** **Potentially** ☐

From: Webcor Construction LP Colin Azevedo **To:** Turner Construction Compan Steve Cunningham **Answered By:** Turner Construction Comp Jeff Thiel

Co-Author:

REQUEST:

1. On sheet MA-26 the 1" discharge piping inside the manhole is labeled as stainless steel in the detail drawings but is described as type K copper tube in the manhole construction note #7. Please confirm what type of material is required.
2. Spec Section 02728-23 Paragraph E. calls for the use of ball float valves as shown on the construction drawings. However the float valves are not shown on the drawings. Please confirm if these ball float valves are required.

SUGGESTION:

ANSWER: **Accept Suggestion:** ☐

Jeff Thiel 4/11/2012 Michael Smith's (SFDPW) response,

1.) The piping within the sewer manhole shall be Type 304 stainless steel.

2.) The contractor shall disregard the installation of the ball float valves for the three (3) concrete motorized gate valve vaults in this contract due to the installation of electrical sump pumps to be installed at all three (3) locations.

Signed and Dated 4/10/12

U-0199 **PG&E Vault Conflict with North East Tie In @ Location 7** **Closed** **04/16/2012** **04/26/2012** **04/23/2012** **Potentially** ☐

From: Webcor Construction LP Colin Azevedo **To:** Turner Construction Compan Steve Cunningham **Answered By:** Turner Construction Comp Jeff Thiel

Webcor/Obayashi Joint Venture

PROJECT MANAGEMENT - REQUEST AND ANSWERS LOG

30100 - Transbay Transit Center Project

Number	Subject	Status	Date Created	Date Required	Date Answered	Cost Impact	Proceed

Co-Author:

REQUEST:

Today while setting up to remove and cast the new lead joint at the North East tie in at location 7 it was discovered that the existing PG&E vault adjacent to the tie in is too close and E. Mitchell would not be able to properly caulk the lead joint.
Please advise how M Squared is to proceed.

SUGGESTION:

ANSWER: **Accept Suggestion:** ☐

Jeff Thiel 4/20/2012 Michael Smith's (SFDPW) repsonse,

"The contractor shall request PG&E to relocate their facilities in order that there is the required 12-inches minimum clearance between the AWSS main and the PG&E electrical vault.

Should PG&E not be able to relocate their facilities, the contractor shall excavate approximately 12-feet east on Howard Street to the next existing pipe joint (GHB joint from the 12"x10" cast iron GHBxGH spigot reducing adaptor for the 10-inch gate valve) in order to connect the new ductile iron AWSS main to the existing cast iron main. The contractor shall locate any new bell and spigot pipe joints before after the concrete vault wall."

Signed and dated 4/16/12

U-0200 **AT&T Vault Conflict at Location 7** **Closed** **04/16/2012** **04/26/2012** **04/23/2012** **Potentially** ☐

From: Webcor Construction LP Colin Azevedo **To:** Turner Construction Compan Steve Cunningham **Answered By:** Turner Construction Comp Jeff Thiel

Co-Author:

REQUEST:

It has been discovered that the AT&T vault near the North West tie in of Location 7 is in conflict with the new AWSS pipe and tie rods to be installed at this location.

Please advise how M Squared is to proceed.

SUGGESTION:

ANSWER: **Accept Suggestion:** ☐

Jeff Thiel 4/20/2012 Michael Smith's (SFDPW) response,

"The contractor shall request ATT to relocate their electrical vault or remove portion of the vault wall as required in order that there is the required 12-inches minimum clearance between the AWSS main and the ATT electrical vault. "

Signed and dated 4/16/12 (see attached)

Contractor to document all coordination with AT&T regarding this conflict.

Webcor/Obayashi Joint Venture

PROJECT MANAGEMENT - REQUEST AND ANSWERS LOG

30100 - Transbay Transit Center Project

Number	Subject	Status	Date Created	Date Required	Date Answered	Cost Impact	Proceed

---

U-0200.1 **AT&T Vault Conflict at Location 7** **Closed** **04/24/2012** **05/04/2012** **04/24/2012** **Potentially** ☐

From: Webcor Construction LP Colin Azevedo **To:** Turner Construction Compan Jeff Thiel **Answered By:** Turner Construction Comp Jeff Thiel

Co-Author:

REQUEST:

The response to RFI#U-0200 did not properly document the coordination efforts and course of action. Please provide a revised response.

See attached email chain for additional information.

SUGGESTION:

ANSWER: **Accept Suggestion:** ☐

Jeff Thiel 4/24/2012 Michael Smith's (SFDPW) original response to RFI U-0200,

"The contractor shall request ATT to relocate their electrical vault or remove a portion of the vault wall as required in order that there is the required 12-inches minimum clearance between the AWSS main and the ATT electrical vault"

Signed and Dated 4/16/12 (See attached)

A Coordination meeting was held on 4/18/12 with ATT, MSquared, W/O and Turner. It was agreed that M Squared would attempt to deal directly with the utility company. If an agreement could not be made the TJPA would be notified.

U-0201 **AWSS - Countersunk Bolts in 14-Inch Ductile Iron Pipe Strong Back Plate** **Closed** **05/04/2012** **05/14/2012** **05/08/2012** **Potentially** ☐

From: Webcor Construction LP Jackson Tukuafu **To:** Turner Construction Compan Steve Cunningham **Answered By:** Turner Construction Comp Jeff Thiel

Co-Author: M Squared Construction, Inc. Aidan Foley

REQUEST:

Please reference attached excerpt from the AWSS STANDARD DRAWING III, drawing No. AWSS 3.

The sizing chart for 14" diameter pipe require the use of Strong Back Type B. The Type B Strong Back

SUGGESTION:

ANSWER: **Accept Suggestion:** ☐

Jeff Thiel 5/7/2012 Michael Smith's (SFDPW) response,

"-The proposed change is acceptable.
-The Contractor shall field verify the actual pipe

Number	Subject	Status	Date Created	Date Required	Date Answered	Cost Impact	Proceed

configuration requires the use of a countersunk bolt and nut to adjoin connecting DI pipe. The countersunk bolts are a special order product and will have to be fabricated specifically for each piece.

Please confirm it is acceptable to use the typical 316 Stainless Steel bolt and nut without the countersink, similar to what is used and shown in Type A for all 14" diameter DI pipe.

outside diameter at each location prior to having strong back fabricated due to differing pipe diameters in use."

Signed and date 5/7/12 (See Attached)

U-0202 **SLUDGE LINE - Unknown Subsurface Structure at 301 Mission** **Closed** **06/07/2012** **06/17/2012** **06/12/2012** **Potentially** ☐

From: Webcor Construction LP Jackson Tukuafu **To:** Turner Construction Compan Steve Cunningham **Answered By:** AECOM Technical Servic Eric Zagol

Co-Author:

REQUEST:

Please refer to attached detail 3/U-5001.

Detail 3 on sheet U-5001 which shows the connection detail for 12" HDPE to existing 10" steel, uses a 10" steel to 12" sleet reducer and then using a 12" steel to 12" HDPE Coupling in order to connect new sludge main to existing sludge main.

Our preference is to use a 10" steel to 10" HDPE coupling and then install a 10" HDPE to 12" HDPE Reducer. As the O.D of the existing sludge is unknown it will cause significant delay in the ordering of the 10" steel to 12" steel reducer as we will have to get the OD at the connection point and then order the material. Even with this piece of material, it will be extremely difficult to get a welder into the trench to weld the reducer on to the exiting pipe as a result of the amount of utilities which were discovered in potholing.

The use of the 12" HDPE to 10" HDPE reducer eliminates the need for a welder in the trench.

SUGGESTION:

ANSWER: **Accept Suggestion:** ☐

Proposed modification is acceptable.

U-0203 **AWSS - Compaction Method for Trade Package TG04.2** **Closed** **06/08/2012** **06/18/2012** **06/11/2012** **Potentially** ☐

From: Webcor Construction LP Jackson Tukuafu **To:** Turner Construction Compan Steve Cunningham **Answered By:** City and County of San Fr Michael Smith

Number	Subject	Status	Date Created	Date Required	Date Answered	Cost Impact	Proceed

Co-Author:

REQUEST:

Specification section 02225 Section 3.7 C forbids the use of flooding or jetting in order to gain the necessary levels of compaction in the AWSS pipe trench.

However due to the amount of utilities and duct packages in the trenches it will not be possible to gain the necessary levels of compaction under and around these utilities by utilizing the methods referenced in the specifications. By not gaining the necessary compaction around utilities it is possible that voids will occur over time causing the utility to be come unsupported and the street surface to sink.

We are requesting the use of jetting (as described in Section 703.08 of the City and County of San Francisco Standard Specifications) as a method to gain the necessary levels of compaction for the AWSS trenches. Jetting has previously been utilized as a successful method of gaining compaction levels on several other Transit Center Utility Relocation packages.

Please confirm that this proposed method is acceptable for use on this trade package. If not, please provide an alternative method for gaining the necessary compaction.

SUGGESTION:

ANSWER: **Accept Suggestion:** ☐

6/11/2012 Michael Smith's (SFDPW) response:

"Water jetting to compact soil will be approved for locations where there are adjacent utilities that prevent compaction by vibratory methods. Use vibratory compaction once the backfill is clear of utilities and up to finish grade under road base/paving."

U-0204 **SLUDGE LINE - Compaction Method for Trade Package TG04.66** **Closed** **06/22/2012** **07/02/2012** **06/22/2012** **Potentially** ☐

From: Webcor Construction LP Jackson Tukuafu **To:** Turner Construction Compan Gary Krutsch **Answered By:** Webcor Construction LP Jackson Tukuafu

Co-Author:

REQUEST:

Specification section 33 34 10 (3.1, C¿]7) forbids the use of flooding or jetting in order to gain the necessary levels of compaction in the HDPE pipe trench. However due to the amount of utilities and duct packages in the trenches it will not be possible to gain the necessary levels of compaction under and around these utilities by utilizing the methods referenced in the specifications. By not gaining the necessary compaction around utilities it is possible that voids will occur over time causing the utility to be come unsupported and the street surface to sink.

M Squared is requesting the use of jetting (as described in Section 703.08 of the City and County of San Francisco

SUGGESTION:

ANSWER: **Accept Suggestion:** ☐

Void. See RFI U-0206 for response.

Number	Subject	Status	Date Created	Date Required	Date Answered	Cost Impact	Proceed

Standard Specifications) as a method to gain the necessary levels of compaction for the AWSS trenches.

Jetting has previously been utilized as a successful method of gaining compaction levels on several other Transit Center Utility Relocation packages (see RFI0203).

Please confirm that this proposed method is acceptable for use on this trade package. If not, please provide an alternative method for gaining the necessary compaction.

U-0205 **SLUDGE LINE - HDPE Hydrostatic Testing** **Closed** **06/22/2012** **07/02/2012** **07/05/2012** **Potentially** ☐

From: Webcor Construction LP Jackson Tukuafu **To:** Turner Construction Compan Gary Krutsch **Answered By:** Turner Construction Comp Jeff Thiel

Co-Author:

REQUEST:

Please refer to spec section 33 34 10-3.1 H

The method of HDPE pipe testing listed in the contract documents differ from the testing methods provided by the pipe manufacturer: The specifications call for the pipe to be filled 24hrs in advance and then the pipe pressurized to 115psi for a duration of 4hrs, The manufacturer's method involved filling the line with pressure for 3 hrs to allow expansion etc. in the pipe and then adding additional water, per Table 2 of the attached document. Once this additional water has been added the pressure can hold for the duration listed. Or alternatively allowing a 5%fluctuation in the pressure target for the test over 1 hour.

Please see attached pipe manufacturer's data attached and provide direction. M Squared believe that the testing method in the specifications is not suitable for HDPE due to its flexibility and would be more suited to steel pipe.

SUGGESTION:

ANSWER: **Accept Suggestion:** ☐

Eric Zagol 7/3/2012 It is acceptable to perform HDPE Hydrostatic Testing per HDPE pipe manufacturer's recommendations. The test phase shall be performed based on the specified "Test Phase - Alternate 2" in manufacturer's data sheet for 3-hour test.

U-0206 **SLUDGE LINE - Compaction Method for Trade Package TG04.6** **Closed** **06/22/2012** **07/02/2012** **07/05/2012** **Potentially** ☐

From: Webcor Construction LP Jackson Tukuafu **To:** Turner Construction Compan Gary Krutsch **Answered By:** Turner Construction Comp Jeff Thiel

Co-Author:

Webcor/Obayashi Joint Venture

PROJECT MANAGEMENT - REQUEST AND ANSWERS LOG

30100 - Transbay Transit Center Project

Number	Subject	Status	Date Created	Date Required	Date Answered	Cost Impact	Proceed

REQUEST:

Specification section 33 34 10 (3.1, C-7) forbids the use of flooding or jetting in order to gain the necessary levels of compaction in the HDPE pipe trench. However due to the amount of utilities and duct packages in the trenches it will not be possible to gain the necessary levels of compaction under and around these utilities by utilizing the methods referenced in the specifications. By not gaining the necessary compaction around utilities it is possible that voids will occur over time causing the utility to be come unsupported and the street surface to sink.

M Squared is requesting the use of jetting (as described in Section 703.08 of the City and County of San Francisco Standard Specifications) as a method to gain the necessary levels of compaction for the Sludge Line trenches.

Jetting has previously been utilized as a successful method of gaining compaction levels on several other Transit Center Utility Relocation packages (see RFI0203).

Please confirm that this proposed method is acceptable for use on this trade package. If not, please provide an alternative method for gaining the necessary compaction.

SUGGESTION:

ANSWER: **Accept Suggestion:** ☐

Zagol 7/5/2012 Flooding or water jetting is not an acceptable method of compaction for HDPE pipe trench backfill.

In limited areas, under and around adjacent utilities, consider using a low strength, low water content concrete fill material. Submit proposed alternate backfill material and mix design for review.

U-0206.01 | **SLUDGE LINE - Compaction Method for Trade Package TG04.6** | **Closed** | **07/05/2012** | **07/15/2012** | **07/17/2012** | **Potentially** ☐

From: Webcor Construction LP Jackson Tukuafu
Co-Author: M Squared Construction, Inc. Aidan Foley
To: Turner Construction Compan Gary Krutsch
Answered By: Turner Construction Comp Jeff Thiel

REQUEST:

See attached previously approved backfill mix designs in submittal package TG0434-006.

Please clarify if either of these can be used as a backfill material mentioned in the response to RFI U-0206.

SUGGESTION:

ANSWER: **Accept Suggestion:** ☐

Eric Zagol 7/17/2012 Provide mix design with 28-day compressive strength no greater than 100 psi.

Jeff Thiel 7/17/2012 If a concrete fill material is to be used, submit mix design for approval.

U-0207 | **AWSS - Connection on Market Street** | **Closed** | **07/10/2012** | **07/20/2012** | **07/11/2012** | **Potentially** ☐

From: Webcor Construction LP Jackson Tukuafu
To: Turner Construction Compan Gary Krutsch
Answered By: Transbay Joint Powers Au Jennifer Tongson

Number	Subject	Status	Date Created	Date Required	Date Answered	Cost Impact	Proceed

Co-Author: M Squared Construction, Inc. Aidan Foley

REQUEST:

While excavating to expose the existing AWSS Main on Market Street M Squared's crew discovered that a portion of the existing cast iron main had already been abandoned in place. They then discovered a ductile iron main that is running parallel to the cast iron pipe.

The ductile iron main is the portion of pipe that is live and this is the line we should now be connecting to in order to proceed with the work. See attached photos. Please note that additional costs will be incurred, as a result of this unforseen condition.

Please advise on how M Squared is to proceed.

SUGGESTION:

ANSWER: **Accept Suggestion:** ☐

7/11/2012 Michael Smith's (SFDPW) response,

"-The contractor shall connect the new 14" DI pipe to the (E) 14" DI pipe on the East end of the excavation to the nearest pipe joint to the original CTEL location.

-Where possible, please deflect new pipe joints 1 degree to compensate for (E) joint deflection at CTEL joint."

Signed and dated 7/11/12. (See Attached)

Pending TJPA approval, a CR for additional cost is forthcoming.

U-0208	AWSS - Clearance Issues with Domestic Water Line on Market Street	Closed	07/10/2012	07/20/2012	07/11/2012	Potentially ☐

From: Webcor Construction LP Jackson Tukuafu **To:** Turner Construction Compan Gary Krutsch **Answered By:** Transbay Joint Powers Au Jennifer Tongson

Co-Author: M Squared Construction, Inc. Aidan Foley

REQUEST:

While excavating west of the gate valve vault location on Market Street M Squard's crew discovered an 8-inch cast iron water line sitting on top of the existing AWSS main to be removed. This 8-inch line also appears to be leaking slightly.

1. As a result of this line M Squared is unable to install the new AWSS with the necessary clearances. Aside from the clearance issues M Squared can no longer install the 14-inch reducer where it is required. M Squared will be able to relocate the reducer which will then require a longer spool piece.

Please advise how M Squared is to proceed.

2. This 8-inch line also has three concrete kickers on the pipe that make it impossible to install the pipe and fittings at this vault location. Please confirm that it is acceptable to remove these kickers temporarily, as they are already restrained with tie rods, for construction purposes. The

SUGGESTION:

ANSWER: **Accept Suggestion:** ☐

7/11/2012 Michael Smith's (SFDPW) response,

"-The Contractor shall request the SFPUC SFWD relocate their (E) 8" low pressure water piping in order to maintain a 12" clearance between their own two utilities.

-Please coordinate with SFWD prior to removing the (E) concrete thrust blocks on the SFWD line. Support SFWD line as required to prevent movement."

Signed and Dated 7/11/12 (See Attached)

Pending TJPA approval, a CR for additional cost is forthcoming.

Number	Subject	Status	Date Created	Date Required	Date Answered	Cost Impact	Proceed

kickers can be reinstalled once the work in this location has been completed.

U-204 **AWSS - Compromised Lead Joint on Howard Street** **Closed** **06/15/2012** **06/25/2012** **06/18/2012** **Potentially** ☐

From: Webcor Construction LP Jackson Tukuafu **To:** Turner Construction Compan Gary Krutsch **Answered By:** Turner Construction Comp Jeff Thiel

Co-Author:

REQUEST:

Please reference the attached COMM0999 provided to TCCO on Friday, June 6, 2012.

As outlined in M Squared's letter dated 6/8/12, M Squared realigned the AWSS main on Howard Street and repacked the lead joints (time card attached for reference). During the Hydrostatic Test by SFWD, the lead joint leaked and failed to hold the test eventhough it was repacked.

As a result, it has become apparent that the AWSS joints have been compromised. Please provide direction on how M Squared is to proceed the with next course of action.

SUGGESTION:

ANSWER: **Accept Suggestion:** ☐

Jeff Thiel 6/18/2012 Michael Smith's (SFDPW) response,

"The Contractor shall remove two (2) additional 12' sections of (E) cast iron pipe on the East end of the horizontal offset. F/I ductile iron pipe with restraints at all joints except for the MJxGH adaptor fitting. Pour new lead joint at Ctel."

Signed and Dated 6/18/12.

END OF REPORT

Report Parameters

Project:	30100	Status Class:	
Sent To:		Run Date:	07/19/2012
Restrict Value of:	C	Run Time:	02:56 PM
From Date:		Operator:	NTRAN
To Date:		Report Code:	PM3012
Status:			

Transbay Transit Center – San Francisco, CA

<u>Noise and Vibration Mitigation Management Plan</u>

Webcor/Obayashi

January 16, 2012

GENERAL:

The Webcor/Obayashi (W/O) Noise and Vibration Mitigation Management policy that will be implemented on the Transbay Transportation Center Project will be an overall project policy, with each Trade Subcontractor contributing their specific plan as they come on board to the project. The primary function of this plan is to comply with Specification Section 00 08 13, 00 08 13/APB, the San Francisco Noise Control Ordinance, regulations and requirements and section 01 35 65, Specific Project mitigation measures and monitoring requirements as applicable to the various phases of work.

When required by the specifications, W/O will ensure its Trade Subcontractors comply with this plan as well as the San Francisco Noise Control Ordinance.

W/O will ensure its Trade Subcontractors apply for written waivers, when required by the specifications or contract, of some of the noise requirements to expedite the project or minimize impacts by application to the TJPA in accordance with Section 00 08 13 Specific Project Requirements. Written waivers shall be uploaded to ConstructWare by CM/GC. Trade Subcontractors shall minimize construction activities during evening, nighttime, weekend, and holiday periods and shall obtain specific permits before performing construction in noise sensitive areas during these periods. The Trade Subcontractor may rely on performing the following Work activities outside the noise requirements:

1. Buttress drilling operation
2. Mass excavation
3. Welding of internal bracing
4. Welding of superstructure

Night noise permits shall be submitted to the TJPA at least 72 hours in advance of work. Noise permit shall include:

1. Name of person in charge of work and phone number
2. Hours to be worked
3. Narrative of scope of work including maps and truck routes
4. List of noise/vibration/light making equipment including make and model
5. Mitigation and monitoring methods being used

W/O will ensure its Trade Subcontractors will provide noise inspections and testing of equipment to ensure that all equipment onsite is in good condition and effectively muffled per manufacturer's recommendation. If inspection or testing documents are requested by the TJPA, or any of its representatives, W/O will require its Trade Subcontractors to provide requested documentation in a timely manner. Trade Subcontractors shall provide inspection and testing documents prior to start of work and as the equipment is replaced to CM/GC. CM/GC shall upload documents to a file location within ConstructWare.

W/O will ensure its Trade Subcontractors will minimize use of vehicle backup alarms and demonstrate how backup alarms will be minimized by using mitigation measures such as: design the construction site with a circular flow pattern that minimizes backing up of trucks and other heavy equipment. Trade Subcontractors shall submit quarterly reports of measures to reduce back up alarms. W/O shall upload these reports to a specific location with ConstructWare.

W/O will ensure all its Trade Subcontractors' equipment onsite is equipped with ambient sensitive alarms that will automatically adjust based on the ambient noise during nighttime hours when ambient

noise is low. Trade Subcontractors shall comply with the TJPA's request for ambient sensitive alarms for all work after 8PM. If requested by the TJPA or its representative, Trade Subcontractors shall provide W/o with equipment specifications showing ambient sensitive alarms for submission via ConstructWare.

Through W/O's requirement submittals outlined in this noise and vibration plan, W/O will verify Trade Subcontractors' construction operations are performed in such a manner to minimize noise.

W/O will verify Trade Subcontractors perform noise monitoring to demonstrate compliance with noise limits and endeavor to minimize construction activities during off hours except for those required and deemed acceptable per the Contract Documents. Trade subcontractors shall submit monthly monitoring reports to W/O for submission via ConstructWare.

W/O will verify Trade Subcontractors haul routes to ensure they minimize noise intrusion into residential areas, and control noise during nighttime hours.

W/O will require all Trade Subcontractors to use procedures and equipment, when it would be effective, that produce lower noise levels than normal when required by the specifications or contract. W/O will require the subcontractor submit manufacturer special noise control kit information. If none is available, then the trade subcontractor needs to submit a statement of this. Upon revival and review of the information, W/O and the subcontractor will identify the events when the noise control measures should be used based on the specifications.

W/O will require all Trade Subcontractors plans to include use of temporary barriers near noisy activities as required by the specifications or contract. Locate such barriers close enough to the noise source to obtain noise attenuation and as necessary and when it is shown it would be effective, construct shed-like structures or complete buildings to contain the noise from nighttime activities.

W/O shall require haul route map, plan and storage location be part of Trade Subcontractors plan and included within its submittal.

VIBRATION CONTROL

Vibration limits are based upon the Federal Transit Administration's Planning and Environment Transit Noise and Vibration Impact Assessment guidelines. W/O will require all Trade Subcontractors' to limit or prohibit use of construction techniques that create high vibration levels when it affects adjacent properties.

If construction techniques that create high vibration levels are used, W/O will require all Trade Subcontractors' to comply with the following additional restrictions:

1. Provide advance notice to TJPA of any vibration intensive activities. Perform vibration monitoring during vibration intensive activities during daytime hours between 7 a.m. and 8 p.m. unless otherwise allowed by special permit or variance, as required by the specifications or contract. Recorded data should be part of the Trade Subcontractor Daily report. A summary shall be submitted monthly and uploaded to ConstructWare.
2. Trade Subcontractors to investigate alternative construction methods and practices to reduce the impacts if resident and implement alternative methods and practices as reasonable.
3. Trade Subcontractors shall provide a plan to measure vibration levels including but not limited to measurement locations, times and metrics. Plan shall also include contingency plan if

operations exceed the limits. This plan shall be uploaded into ConstructWare by W/O.

4. Limit or prohibit use of construction techniques that create high vibration levels.

Trade Subcontractors shall be responsible for providing technical information, as required by the specifications, in their plan. Trade Subcontractors plan shall but submitted via ConstructWare for Record Only.

Transbay Transit Center – San Francisco, CA

<u>Air Quality Plan</u>
Webcor/Obayashi
January 16, 2012

GENERAL PLAN:

The Webcor/Obayashi (W/O) Air Quality Plan that will be implemented on the Transbay Transit Center Project will be an overall policy with each subcontractor contributing their specific plan as they come on board to the project. The primary function of this plan is to comply with the Bay Area Air Quality Management District regulations and requirements.

W/O will require its Trade Subcontractors to establish a plan that complies with all requirements set for in specification sections 00 08 13, and 01 35 65 prior to starting Work onsite. W/O shall check and verify trade subcontractor's compliance with air quality requirements on a daily basis. Any non-compliant trade subcontractors will receive both verbal and written notice through Safe Site One (W/O internal program). Additional, W/O will require trade subcontractors to demonstrate they are actively monitoring air quality by providing checklists or documentation on each Trade Subcontractors daily report. W/O shall verify its Trade Subcontractors Air Quality plan includes the following but not necessary limited to:

1. Specific measures to minimize impacts to sensitive receptors associated with exposure to respirable nuisance dust (PM10) and achieve a goal of No Visible Emissions.
2. W/O shall verify Trade Subcontractors comply with City Dust Control Order (DPW Order No. 171,378. Water active construction areas at least twice daily to control dust using non-potable water in accordance with San Francisco Ordinance 175-91
3. Identify specific measures to minimize dust generation; to reduce health risks to workers and the public.
4. Mist the immediate excavation area with a water spray to prevent airborne dust particles. Perform continuous water spraying during dust-generating activities. Mist or spray in such a way as to prevent puddling or generation of runoff, which could potentially reach storm drains or catch basins.
5. Minimize the amount of excavated material or demolished debris stored at the Site. Remove excavated material and demolished debris, with the exception of hazardous materials or suspected hazardous materials, from the Site no later than the end of each workday. If hazardous materials or suspected hazardous materials are stored on site, store such materials in accordance with all applicable California Environmental Protection Agency regulations, including providing storage in proper containers and protection from exposure to the elements. Remove such materials from the Site as soon as possible for disposal or recycling in accordance with applicable laws and regulations.
6. Wet all exposed soil surfaces at least 3 times daily during dry weather or more frequently if dust is blowing or if required by the TJPA. Immediately wet sweep serpentine residuals from the street.
7. Keep the Site and adjacent areas clean and perform wet sweeping at the end of each shift. Sweep daily (with water sweepers) all paved access roads, parking areas and staging areas at construction sites. Sweep streets daily (with water sweepers) if visible soil material is carried onto adjacent public streets.
8. Load haul trucks carrying excavated material so that the material does not extend above the walls or back of the truck bed. Wet before covering and tightly cover the surface of each load before the haul truck leaves the loading area. Cover trucks hauling soil, sand, and other loose materials or require trucks to maintain at least 2 feet of freeboard
9. Clean up spillage on City streets, whether directly or indirectly caused by Contractor's operations.

10. Minimize use of on-site diesel construction equipment, particularly unnecessary idling. Shut off construction equipment to reduce idling when not in direct use. Where feasible, replace diesel equipment with electrically powered machinery.
11. Retain receipts of ultra-low sulphur fuel (ULSF) purchase and equipment tuning and repair and make these available to the TJPA Representative or to the Federal Transit Administration (FTA) designee upon request.
12. Locate diesel engines, motors, or equipment as far away as possible from existing residential areas.
13. Properly tune and maintain diesel power equipment. To manufacturer's specification and frequency.
14. Suspend grading operations during first and second stage smog alerts, and during high winds (i.e., winds greater than 25 miles per hour).
15. Upon completion of the construction phase, buildings with visible signs of dirt and debris from the construction site shall be power-washed and/or painted (provided that permission is obtained from the property owner to access and wash the property with no fee charged by the (owner). Trade Contractor shall request CMGC to contact Singer and Associates to notify property owners for access. If permission from property owners for access is not granted, Trade Contractor is not responsible for power-washing or painting.
16. Pave, apply water three times daily, or apply (non-toxic) soil stabilizers on all unpaved access roads, parking areas, and staging areas at construction sites.
17. If applicable, replant vegetation in disturbed areas as quickly as possible.

W/O will verify Trade Subcontractors comply with the requirements of the Bay Area Air Quality Management District (BAAQMD) Regulation 6 (for particulate matter and visible emissions), Regulation 7 "Odorous Substances," Regulation 11 "Hazardous Pollutants," and the California Health and Safety Code Division 26 "Air Resource", Chapter 3 "Emission Limitations," Section 41700 "Prohibited Conduct," and related regulations. Trade Subcontractors shall notify the BAAQMD 10 working days prior to commencing demolition or hazardous materials abatement work.

1. Such notification shall include the names and addresses of operations and persons responsible; description and location of the structure to be demolished or altered including size, age and prior use, and the approximate amount of friable asbestos; scheduled starting and completion dates of demolition or abatement; nature of planned work and methods to be employed; procedures to be employed to meet BAAQMD requirements; and the name and location of the disposal site.
2. The BAAQMD randomly inspects removal operations and will respond to any complaints received. Contractor shall cooperate with and facilitate all BAAQMD authorized inspections.\
3. Notifications shall be documented and provided to CM/GC for submission to the TJPA via ConstructWare.

Trade Subcontractors shall be responsible for providing technical information, as required by the specifications, in their plan. All trade subcontractors plans shall be submitted for Record Only via ConstructWare.

Transbay Transit Center – San Francisco, CA

<u>Waste Management and Construction Debris Plan Revision 5</u>

Webcor/Obayashi
February 23, 2012

Exhibit P

GENERAL PLAN:

Webcor/Obayashi understands that the building contractor plays a critical role in the management of jobsite produced construction waste. Webcor /Obayashi has adopted a waste reduction and recycling policy that will be implemented on the Transbay Transportation Center Project. This policy will be an overall policy with each subcontractor contributing their specific plan as they come on board to the project.

The primary goal of the plan is to divert as much construction generated debris & unused material from landfills as possible. At a minimum, Webcor/Obayashi and its trade subcontractors will divert 75% of the waste generated on the construction project from landfills. Trade subcontractors Construction Waste Management Plan shall be prepared and submitted in compliance with the Owner's LEED project requirements and the requirements of the city of San Francisco.

The Trade Subcontractors are required to comply with Specification Sections 00 08 15, 01 74 00, and 01 81 13 as well as any or all of the procedures listed below. If a conflict in percentages exists between this section and Section 01 81 13, General LEED Building Design and Construction Requirements, the most stringent section shall govern.

- The use of debris haulers with documented recycling levels.
- 2) Supplying material specific debris boxes on site for such items as lumber and wood related products, dirt, concrete and asphalt, cardboard & metals.
- Having trade specific trade subcontractors haul their own waste to local recyclers.
- Requesting trade subcontractors and vendors to utilize reusable packaging when possible.
- Trade subcontractors plan shall outline the expected wastes to be generated on site, means of recycling and disposal, handling methods, hauling, and required documentation for achieving LEED for New Construction credits MR 2.1 and MR 2.2, Construction Waste Management at 75% landfill diversion or greater.

All Trade Subcontractors shall develop their own Waste Management and Construction Debris Plan that complies with the Contract Documents and this plan. Trade Subcontractors shall submit this plan in accordance with the specifications and it shall become part of Webcor/Obayashi's overall project plan. All technical requirements defined in the contract documents shall be fulfilled by Trade Subcontractors and submitted to the CMO For Record only through ConstructWare

Webcor/Obayashi as the WEBCOR/OBAYASHI JOINT VENTURE will ensure the Trade Subcontractors are effectively implementing the procedures and are in compliance with Specifications by verifying;

WEBCOR/OBAYASHI JOINT VENTURE will verify that after Award of Contract and before commencement of the Work at the site, the Trade Subcontractor conducts a Reuse/Recycle Assessment as part of their Solid Waste Management Plan (SWMP): Trade Subcontractor's assessment shall estimate the types and quantities of materials for the Project that are anticipated to be feasible for source separation for recycling or reuse, either onsite or offsite, and note the procedures intended for a recycling, reuse, and salvage program. Documentation of the trade subcontractor's plan shall consist of the following:

- Trade subcontractor and vendor waste management strategies.
- Trade subcontractor required to provide a monthly summary of the total waste material with backup documentation (weight tickets).
- The amount recycled (in tons), material types, recycling procedures, and processing facility locations to which materials were diverted.

Trade subcontractor Construction Waste Management Plan shall also include estimated wastes, disposal, and handling with the following:

a. List of materials that comprise source separated materials include, but are not limited to:

- Concrete, Wood, Mud, Mixed Aggregates, Yard waste, Metals, and Cardboard.
- Yard waste is not included in our overall diversion rate calculation on the template or corresponding spreadsheet per the requirements from the LEED BD&C v3.0 Reference Guide.

b. List of materials that comprise Miscellaneous Construction Debris include, but are not limited to:

- Wood, Scrap Metal, Drywall, Plastics, Film Plastics, Wire, Cable, Glass.
- The total quantity estimated, inception to completion Disposal.
- Total Project Generation, Diversion + Disposal.
- Project Diversion Rate.

WEBCOR/OBAYASHI JOINT VENTURE will verify that Construction and Demolition Waste: Non-hazardous solid resources resulting from Trade Subcontractor's construction, remodeling, repair, and demolition operations for the Project are properly transferred to a C&D Recycling Facility: A facility that receives only C&D (construction and demolition) material. Trade Subcontractors shall provide Webcor/Obayashi a summary sheet, including all receipts for transport materials each month with the progress billing.

WEBCOR/OBAYASHI JOINT VENTURE will verify that of the inevitable waste generated, Trade Subcontractor's reuse, salvage, or recycle as many of the waste materials as economically feasible.

WEBCOR/OBAYASHI JOINT VENTURE will participate/attend a meeting with Trade Subcontractor, the TJPA Representative and representatives of the City's Solid Waste Management and recycling programs prior to commencement of work. Webcor/Obayashi will

ensure all trade subcontractors are made aware of the LEED requirements for C&D diversion before being allowed to work on the site.

WEBCOR/OBAYASHI JOINT VENTURE will verify that Trade Subcontractors submit a Monthly Disposal and Recycling Summary Report: quantifying the construction and demolition waste generated and recycled, reused or disposed of at Class 3 Landfill. Contractor shall also send a copy of this report to the TJPA Representative and the SWMP to the City Government Recycling Coordinator. The Comprehensive Disposal and Recycling Summary Report shall be submitted quantifying the construction and demolition waste generated and recycled, reused or disposed of at Class 3 Landfill, on a monthly basis. This report is a condition of progress payment and failure to submit this information shall render the Applications for Payment incomplete. Subcontractors/trades are responsible for contracting with a regional facility to haul materials from the site. The trade subcontractor shall calculate the C&D diversion rate for both LEED requirements (excluding yard waste) and the requirements set by The City (including yard waste). The W/O LEED representative will screen every C&D Submittal and review trade contractor and subcontractors C&D Plans for clarity, completeness, and compliance with City/LEED requirements.

WEBCOR/OBAYASHI JOINT VENTURE will verify that Trade Subcontractors develop and implement procedures for source separation to the greatest extent feasible.

WEBCOR/OBAYASHI JOINT VENTURE will verify the Trade Subcontractors plans develop and implement procedures for transporting commingled (mixed) construction and demolition waste that cannot be feasibly source-separated.

WEBCOR/OBAYASHI JOINT VENTURE will verify the Trade Subcontractors plans develop and implement procedures for Salvage and Reuse.

WEBCOR/OBAYASHI JOINT VENTURE will verify the Trade Subcontractors plans develop and implement practices for this project that will reduce waste at the source.

WEBCOR/OBAYASHI JOINT VENTURE will verify the Trade Subcontractors plans develop and implement procedures for materials are recycled and/or reused onsite

WEBCOR/OBAYASHI JOINT VENTURE will verify that Trade Subcontractors participate in reuse programs by reviewing each trade subcontractors Monthly Disposal report. For such reuse programs, Trade Subcontractor so shall refer to the City's construction and demolition recycling program.

Contractor shall review the environmental goals of this Project with all Trade Subcontractors during the preconstruction meeting. CMGC shall make a proactive effort to increase awareness of these goals among the Contractor's job site workers. W/O will make a proactive effort to increase awareness of these goals among the site workers by requiring that each Subcontractor take Click Safety training prior to stepping on the jobsite. As part of this Click Safety training,

there is a module dedicated to teaching and reviewing the LEED requirements of the project during construction activity.

WEBCOR/OBAYASHI JOINT VENTURE will verify that Trade Subcontractors are using registered transporters and registered facilities. Only registered transporters can remove mixed construction and demolition debris from the construction site, and they must take this material to a registered facility. NOTE: Registered facility: Any facility that accepts mixed construction and demolition debris for processing and recycling must be registered with the City and must demonstrate an overall minimum recycling rate of 65% for mixed construction and demolition debris. A registered facility must have applied for and received a registration from the San Francisco Department of the Environment. W/O will ensure that Waste Management Companies that service San Francisco that are retained by the trade subcontractors are registered transporters and meet the City/LEED requirements. Trade Subcontractors shall refer to SFEnvironment.org for the citys most current list of registered transporters.

WEBCOR/OBAYASHI JOINT VENTURE will verify that Trade Subcontractors are implementing the following:
1. Eliminate the procurement of unneeded supplies.
2. Reduce waste by printing and copying double-sided.
3. Submit all submittals, reports, and forms in electronic format (PDF) unless otherwise noted.
4. Fully participate in available and required recycling and composting programs.
5. Purchase products made with recycled content such as paper and recycled aggregate.

WEBCOR/OBAYASHI JOINT VENTURE will verify that Trade Subcontractors shall submit:
1. Construction and Demolition Debris Management Plan.
2. Construction and Demolition Debris Recovery Monthly Summary Report and supporting documentation.
3. Construction and Demolition Debris Recovery Final Report.

Trade Subcontractors plan shall comply with specification section 02 41 00. All Trade Subcontractors will remove and dispose of all waste materials from the site for off-site disposal in compliance with all applicable laws, ordinances, rules, and regulations. W/O and all subcontractors will work with the TJPA representative so that the representative may characterize the waste materials as required by law to the extent required by the contractor's selected disposal facilities.

Trade Subcontractors plan shall comply with specification section 01 15 00. Trade Subcontractors shall perform work in a manner to minimize generation of dust, dirt, rubbish, and other debris, to prevent dust and debris from interfering with the progress of the work, and to keep dust and debris from accumulating at the work site or adjacent areas. Trade subcontractors shall remove debris and rubbish from the site on a daily basis.

Trade Subcontractors plan shall comply with specification section 01 13 50, by preventing the mixing of hazardous and non-hazardous materials.

Trade subcontractors shall be required to provide technical information, as required by the specifications including compliance with CCSF Ordinance 27-06, in their plan which will be submitted For Record Only to the CMO.

Exhibit Q

APPRENTICESHIP PROGRAM

WEBCOR/OBAYASHI JOINT VENTURE - TRADE SUBCONTRACTOR'S APPRENTICESHIP REQUIREMENTS

Trade Subcontractor Name	

CRAFTS EXPECTED TO BE EMPLOYED BY TRADE SUBCONTRACTOR

CRAFT (i.e. Carpenters)	**List Minimum Apprentice Ratio** (As required by registered Apprenticeship program for Craft)	**List Maximum Apprentice Ratio** (As required by registered Apprenticeship program for Craft)

CRAFTS EXPECTED TO EMPLOYED BY SUBCONTRACTORS OF THE TRADE SUBCONTRACTOR

SUBCONTRACTOR #1

Subcontractor Name	

CRAFT (i.e. Carpenters)	**List Minimum Apprentice Ratio** (As required by registered Apprenticeship program for Craft)	**List Maximum Apprentice Ratio** (As required by registered Apprenticeship program for Craft)

SUBCONTRACTOR #2

Subcontractor Name	

CRAFT (i.e. Carpenters)	**List Minimum Apprentice Ratio** (As required by registered Apprenticeship program for Craft)	**List Maximum Apprentice Ratio** (As required by registered Apprenticeship program for Craft)

WEBCOR/OBAYASHI JOINT VENTURE - TRADE SUBCONTRACTOR'S APPRENTICESHIP REQUIREMENTS

SUBCONTRACTOR #3

Subcontractor Name	

CRAFT (i.e. Carpenters)	**List Minimum Apprentice Ratio** (As required by registered Apprenticeship program for Craft)	**List Maximum Apprentice Ratio** (As required by registered Apprenticeship program for Craft)

SUBCONTRACTOR #4

Subcontractor Name	

CRAFT (i.e. Carpenters)	**List Minimum Apprentice Ratio** (As required by registered Apprenticeship program for Craft)	**List Maximum Apprentice Ratio** (As required by registered Apprenticeship program for Craft)

SUBCONTRACTOR #5

Subcontractor Name	

CRAFT (i.e. Carpenters)	**List Minimum Apprentice Ratio** (As required by registered Apprenticeship program for Craft)	**List Maximum Apprentice Ratio** (As required by registered Apprenticeship program for Craft)

SUBCONTRACTOR #6

Subcontractor Name	

CRAFT (i.e. Carpenters)	**List Minimum Apprentice Ratio** (As required by registered Apprenticeship program for Craft)	**List Maximum Apprentice Ratio** (As required by registered Apprenticeship program for Craft)

WEBCOR/OBAYASHI JOINT VENTURE - TRADE SUBCONTRACTOR'S APPRENTICESHIP REQUIREMENTS

SUBCONTRACTOR #7

Subcontractor Name	

CRAFT (i.e. Carpenters)	**List Minimum Apprentice Ratio** (As required by registered Apprenticeship program for Craft)	**List Maximum Apprentice Ratio** (As required by registered Apprenticeship program for Craft)

SUBCONTRACTOR #8

Subcontractor Name	

CRAFT (i.e. Carpenters)	**List Minimum Apprentice Ratio** (As required by registered Apprenticeship program for Craft)	**List Maximum Apprentice Ratio** (As required by registered Apprenticeship program for Craft)

SUBCONTRACTOR #9

Subcontractor Name	

CRAFT (i.e. Carpenters)	**List Minimum Apprentice Ratio** (As required by registered Apprenticeship program for Craft)	**List Maximum Apprentice Ratio** (As required by registered Apprenticeship program for Craft)

SUBCONTRACTOR #10

Subcontractor Name	

CRAFT (i.e. Carpenters)	**List Minimum Apprentice Ratio** (As required by registered Apprenticeship program for Craft)	**List Maximum Apprentice Ratio** (As required by registered Apprenticeship program for Craft)

WEBCOR/OBAYASHI JOINT VENTURE - TRADE SUBCONTRACTOR'S APPRENTICESHIP REQUIREMENTS

SUBCONTRACTOR #11

Subcontractor Name	

CRAFT (i.e. Carpenters)	**List Minimum Apprentice Ratio** (As required by registered Apprenticeship program for Craft)	**List Maximum Apprentice Ratio** (As required by registered Apprenticeship program for Craft)

SUBCONTRACTOR #12

Subcontractor Name	

CRAFT (i.e. Carpenters)	**List Minimum Apprentice Ratio** (As required by registered Apprenticeship program for Craft)	**List Maximum Apprentice Ratio** (As required by registered Apprenticeship program for Craft)

SUBCONTRACTOR #13

Subcontractor Name	

CRAFT (i.e. Carpenters)	**List Minimum Apprentice Ratio** (As required by registered Apprenticeship program for Craft)	**List Maximum Apprentice Ratio** (As required by registered Apprenticeship program for Craft)

SUBCONTRACTOR #14

Subcontractor Name	

CRAFT (i.e. Carpenters)	**List Minimum Apprentice Ratio** (As required by registered Apprenticeship program for Craft)	**List Maximum Apprentice Ratio** (As required by registered Apprenticeship program for Craft)

WEBCOR/OBAYASHI JOINT VENTURE - TRADE SUBCONTRACTOR'S APPRENTICESHIP REQUIREMENTS

SUBCONTRACTOR #15

Subcontractor Name	

CRAFT (i.e. Carpenters)	**List Minimum Apprentice Ratio** (As required by registered Apprenticeship program for Craft)	**List Maximum Apprentice Ratio** (As required by registered Apprenticeship program for Craft)

SUBCONTRACTOR #16

Subcontractor Name	

CRAFT (i.e. Carpenters)	**List Minimum Apprentice Ratio** (As required by registered Apprenticeship program for Craft)	**List Maximum Apprentice Ratio** (As required by registered Apprenticeship program for Craft)

SUBCONTRACTOR #17

Subcontractor Name	

CRAFT (i.e. Carpenters)	**List Minimum Apprentice Ratio** (As required by registered Apprenticeship program for Craft)	**List Maximum Apprentice Ratio** (As required by registered Apprenticeship program for Craft)

SUBCONTRACTOR #18

Subcontractor Name	

CRAFT (i.e. Carpenters)	**List Minimum Apprentice Ratio** (As required by registered Apprenticeship program for Craft)	**List Maximum Apprentice Ratio** (As required by registered Apprenticeship program for Craft)

WEBCOR/OBAYASHI JOINT VENTURE - TRADE SUBCONTRACTOR'S APPRENTICESHIP REQUIREMENTS

SUBCONTRACTOR #19

Subcontractor Name	

CRAFT (i.e. Carpenters)	**List Minimum Apprentice Ratio** (As required by registered Apprenticeship program for Craft)	**List Maximum Apprentice Ratio** (As required by registered Apprenticeship program for Craft)

SUBCONTRACTOR #20

Subcontractor Name	

CRAFT (i.e. Carpenters)	**List Minimum Apprentice Ratio** (As required by registered Apprenticeship program for Craft)	**List Maximum Apprentice Ratio** (As required by registered Apprenticeship program for Craft)

MONTHLY

TRADE SUBCONTRACTOR AFFIDAVIT

TRADE PACKAGE NO.:_____

I, _____ declare under penalty of perjury that:

1. **I am the _____ of _____ and I am responsible**
(Owner, Officer, Partner) (Company)
for the payment of persons employed by_____ who performed work on
(Company)
the_____, in the classification(s) of_____
(Project)
_____.

2. **_____ The apprenticeship committee(s) either denied or failed to respond to our request for the dispatch of apprentices, and therefore all workers were classified as journeymen for the following crafts: _____**
_____

Or

During the previous monthly period _____
(month)

The required number of apprentices by craft listed and initialed below have been employed according to the minimum and/or maximum requirements as required by the regulating documents for the previous period. (Attach backup demonstrating compliance for period referenced above)

CRAFT	IN COMPLIANCE (Y/N)	BACKUP ATTACHED (Y/N)

Or

Provide a plan to satisfy this requirement by the end of the project without exceeding the maximum number of apprentices on a daily basis.

This document must be submitted and approved, with backup if required, prior to submittal and subsequent approval of the next billing period's progress billing.

Executed this _____ day of _____ 201___, in _____, CA.

_____
(Signature)

FINAL

TRADE SUBCONTRACTOR AFFIDAVIT

TRADE PACKAGE NO.: _____

I, _____ declare under penalty of perjury that:

1. **I am the _____ of _____ and I am responsible**
(Owner, Officer, Partner) (Company)
for the payment of persons employed by_____ who performed work on
(Company)
the_____, in the classification(s) of_____
(Project)
_____.

2. **During the payroll periods commencing on _____ and ending _____, all persons employed by my company on this project have been paid the specified general prevailing rate of per diem wages for the specified craft or classification pursuant to Labor Code §§ 1771 and 1813.[1]**

3. **_____ The apprenticeship committee(s) either denied or failed to respond to our request for the dispatch of apprentices, and therefore all workers were classified as journeymen.**

Or

The required number of apprentices by craft listed and initialed below have been employed according to the minimum and/or maximum requirements as required by the regulating documents.

CRAFT	IN COMPLIANCE (Y/N)

Executed this _____ day of _____ 201___, in _____, CA.

This document must be submitted and approved prior to final retention payment.

_____

(Signature)

[1] Except for public works projects of one thousand dollars ($1,000) or less, not less than the general prevailing rate of per diem wages for work of a similar character in the locality in which the public work is performed, and not less than the general prevailing rate of per diem wages for holiday and overtime work fixed as provided in this chapter, shall be paid to all workers employed on public works.

This section is applicable only to work performed under contract, and is not applicable to work carried out by a public agency with its own forces. This section is applicable to contracts let for maintenance work.

Exhibit R

Survey Information

CHAUDHARY & ASSOCIATES, INC.
ENGINEERS
SURVEYORS
INSPECTORS
851 NAPA VALLEY CORPORATE WAY ▪ SUITE G ▪ NAPA, CALIFORNIA 94558-7551
PHONE: 707.255.2729 ▪ FAX: 707.255.5021 ▪ WWW.CHAUDHARY.COM

December 27, 2011
#11-03-014

Mr. Rick Buellesbach
Senior Project Manager - Transbay Transit Center
Webcor/Obayashi Joint Venture
175 Beale Street
San Francisco, CA 94105

Re: Transbay Transit Center Quality Control Surveys
Subject: December 2011 Control Verification Survey Results

Dear Mr. Buellesbach:

The field work for subject surveys was conducted by Chaudhary & Associates December 5 - 8, 2011. The surveys included verification of Chaudhary & Associates control (as shown on the Survey Control Plan dated 11-10-2011), with the exception of control point 217 which was destroyed sometime between the November 2011 and December 2011 control verification surveys.

Horizontal control values for point numbers 54, 208, 209, 213, 101, 105, 215, and 227 were constrained in this control network horizontal adjustment. The elevation values remain unchanged from the November 2011 surveys. The table below shows both the 11-10-2011 and the 12-21-2011 values for the remaining control points. Because data values can be impacted by environmental factors (temperature and humidity), seismic activity, and the various combinations of back sight and foresight data available on any given day, only the values which differ by 0.01' or more are adjusted and shown on the following table (and updated on the 12/2011 control map to be sent to you tomorrow). Field note copies and Star Net Reports have been mailed to you.

Horizontal Values

Point #	November 10, 2011		December 2011		Description
	Northing	Easting	Northing	Easting	
79	2115835.42	6013588.51	2115835.43	6013588.49	Fnd Mag+Shnr on TC
205	2115091.66	6013145.43	2115091.66	6013145.42	Mag Nail
221	2115642.30	6013753.17	2115642.32	6013753.18	Fnd Scribed-X KCA #4
223	2115654.49	6014255.95	2115654.48	6014255.95	Fnd Scribed-x KCA 9605
224	2115924.30	6013990.82	2115924.30	6013990.81	Cut-X
225	2115838.99	6014083.47	2115838.98	6014083.47	Fnd Scribed-X KCA 9761
229	2115259.63	6013325.88	2115259.62	6013325.87	Mag+Wshr

Please feel free to call me at (707) 255-2729 any questions or comments.

LICENSED LAND SURVEYOR
HELMUT R. KORSTICK
PLS 7739
STATE OF CALIFORNIA

Sincerely,
CHAUDHARY & ASSOCIATES, INC.
A California Corporation

Helmut R. Korstick

Helmut R. Korstick, PLS 7739
Project Surveyor

SURVEY PROCEDURES

1) CHAUDHARY AND ASSOCIATES FIELD CREW LOCATED AND TIED OUT CONTROL BETWEEN APRIL 22–MAY 13, 2011. DIGITAL LEVELS WERE UTILIZED FOR THE VERTICAL COMPONENT, AND A TRIMBLE S6 WAS USED FOR THE HORIZONTAL COMPONENT. CONTROL WAS ADJUSTED UTILIZING STAR–NET SOFTWARE. OF THE 4 MAIN CONTROL POINTS SHOWN ON SHEET GT–0100 OF PLANS (BEING PTS. 54, 101, 105, AND 106), PTS. 54, 101, AND 105 REMAIN AS OF THE DATES OF THIS SURVEY. CONSEQUENTLY, PTS. 54, 101, AND 105 WERE HELD IN THE STAR NET ADJUSTMENT. A TOPCON DL–102 DIGITAL LEVEL WAS UTILIZED FOR THE VERTICAL COMPONENT. NOTE: CONTROL POINTS 220–226 WERE FIELD SURVEYED BETWEEN SEPTEMBER 9–14, 2011.

2) CENTERLINES AS SHOWN ON PLAN SHEET C–0100 TO BE FIELD VERIFIED.

3) GRID LINES TO BE SET BY PLACING A CUT X OR OTHER APPROPRIATE SURVEY MARKER ON THE EXTENSION OF SAID GRID LINES WHERE PRACTICAL OR PER WEBCOR AUTHORIZATION.

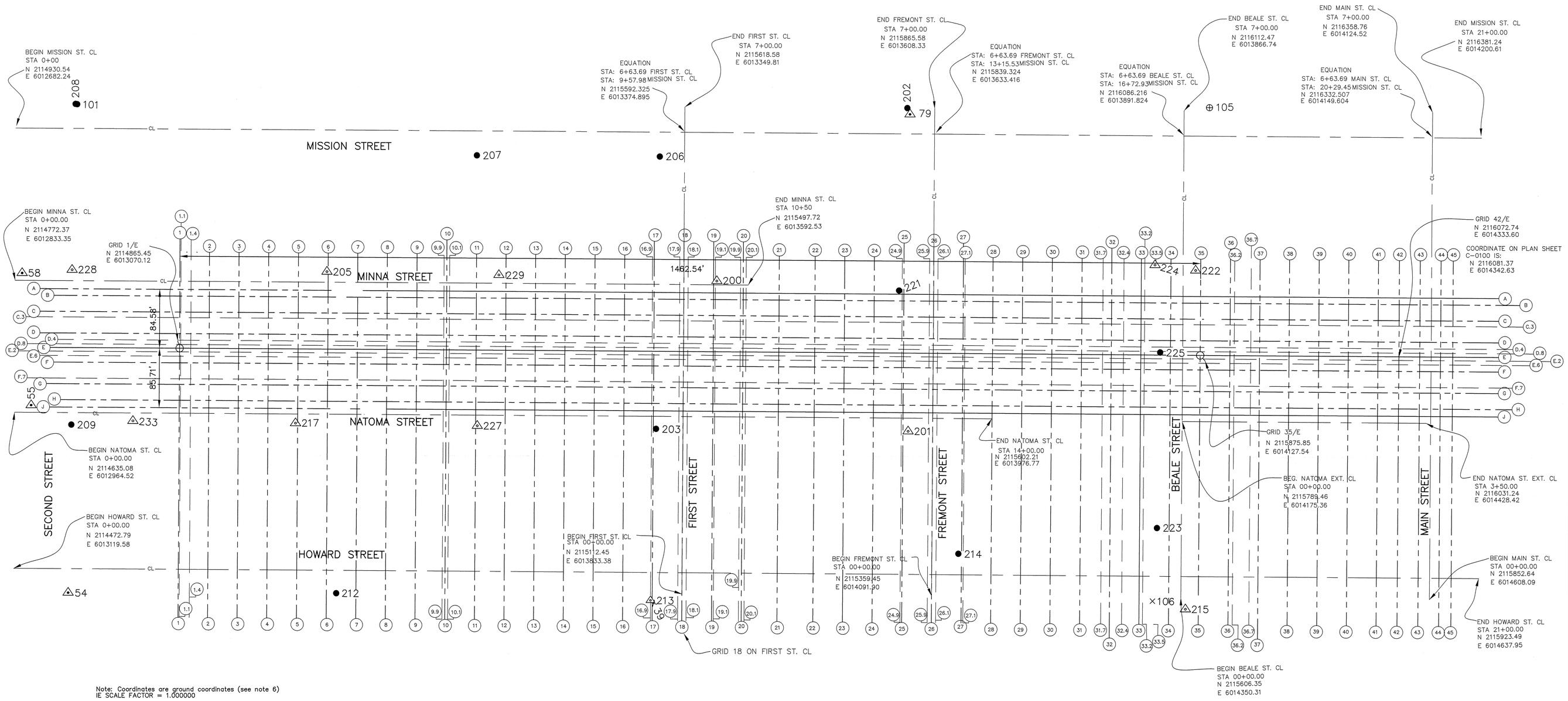

Note: Coordinates are ground coordinates (see note 6)
IE SCALE FACTOR = 1.000000

POINT TABLE

Pt.#	Northing	Easting	Elev.	DESC.	SOURCE
54*	2114501.77	6013199.83	25.36	FND MAG+WASHER ON TC	C&A FROM PARSONS\CALTRAIN PROJECT
55	2114658.94	6012974.42	24.11	FND MAG+WASHER ON TC	C&A FROM PARSONS\CALTRAIN PROJECT
58	2114786.86	6012833.18	23.16	FND MAG+WASHER ON TC	C&A FROM PARSONS\CALTRAIN PROJECT
79	2115835.43	6013588.49	14.14	FND MAG+SHNR ON TC	C&A FROM PARSONS\CALTRAIN PROJECT
101	2115016.20	6012721.43	22.05	FND SCRIBED X KCA 101	MARTIN M. RON (PER SHEET GT–0100)
105	2116140.97	6013889.65	12.74	FND RIVET+BT MMR CTL	MARTIN M. RON (PER SHEET GT–0100)
106***	2115574.58	6014324.45	13.31	DPW BD+RIVET	DPW
200	2115470.67	6013556.22	18.22	MAG NAIL & WASHER	SET ON 4–21–2011 BY C&A
201	2115505.98	6013803.24	15.11	MAG NAIL	SET ON 4–21–2011 BY C&A
202	2115839.15	6013579.47	14.56	FND RIVET+BT MMR CTL	MARTIN M. RON
203	2115257.23	6013641.61	18.55	FND LEAD+TACK	UNKNOWN
205	2115091.66	6013145.42	20.64	MAG NAIL	SET ON 4–21–2011 BY C&A
206	2115542.47	6013373.50	16.37	FND NAIL+BT RCE 14786	UNKNOWN
207	2115361.22	6013183.82	18.43	FND NAIL+BT RCE 14786	UNKNOWN
208	2115014.84	6012719.45	22.04	FND CUT–X WITH RIVET	UNKNOWN
209	2114678.65	6013035.17	24.66	FND RIVET+BT MMR CTL	MARTIN M. RON
212	2114768.20	6013476.35	22.76	FND 1" BRASS PLUG	CCSF
213	2115074.65	6013807.38	20.23	MAG NAIL & SHNR	SET ON 4–26–2011 BY C&A
214	2115429.58	6014077.34	15.37	FND 1" BRASS PLUG	CCSF
215	2115599.06	6014366.41	13.92	MAG NAIL & WASHER	SET ON 4–26–2011 BY C&A
221	2115642.32	6013753.18	15.49	SCRIBED–X KCA 4	KCA ENGINEERS
222	2115959.09	6014037.98	13.16	CUT–X	SET ON 9–12–2011 BY C&A
223	2115654.48	6014255.95	13.46	SCRIBED–X KCA 9605	KCA ENGINEERS
224	2115924.30	6013990.81	12.57	CUT–X	SET ON 9–12–2011 BY C&A
225	2115838.98	6014083.47	12.66	SCRIBED–X KCA 9761	KCA ENGINEERS
227	2115081.93	6013454.34	20.43	MAG NAIL & WASHER	SET ON 10–3–2011 BY C&A
228	2114839.80	6012881.28	23.01	MAG NAIL & WASHER	SET ON 10–3–2011 BY C&A
229	2115259.62	6013325.87	18.80	MAG NAIL & WASHER	SET ON 10–3–2011 BY C&A
233	2114743.93	6013094.94	23.58	CUT–X IN GUTTER	SET ON 10–31–2011 BY C&A
39***	2115074.59	6013813.50	20.34	SCRIBED X ON CONCRETE	C&A FROM PARSONS\CALTRAIN PROJECT

* SAME AS CONTROL POINT 54 ON PLAN SHEET GT–0100
** HELD AS POINT 101 ON PLAN SHEET GT–0100 (DESCRIBED AS MMR BD+RIVET ON SHEET GT–0100)
*** CONTROL POINT SEARCHED FOR AND NOT FOUND ON THIS SURVEY

CONTROL VALUES REVISED FROM PREVIOUS REVISION(11–10–2011) (VALUES NOW TO THE NEAREST 0.01' INSTEAD OF 0.001')

SURVEYOR'S STATEMENT

I CERTIFY THAT THIS MAP CORRECTLY REPRESENTS A FIELD SURVEY MADE BY ME AND AN ASSISTANT IN DECEMBER 2011. THE CONTROL VALUES PASSED THE CHI–SQUARE TEST AT 5.00% LEVEL AS PER THE STAR NET REPORTS.

Helmut R Korstick L.S. 7739
License Expires: 12–31–2011

LEGEND

× SURVEY POINTS (SEARCHED FOR AND NOT FOUND ON THIS SURVEY)

△ CHAUDHARY AND ASSOCIATES CONTROL SET AND TIED OUT ON THIS SURVEY. COORDINATES WERE ADJUSTED USING STAR NET SOFTWARE. DIGITAL LEVELS WERE PERFORMED FOR THE VERTICAL COMPONENT.

⊗ CONTROL POINT AS SHOWN ON SHEET GT–0100 OF PLANS (50% SUBMITTAL).

△ CHAUDHARY AND ASSOCIATES CONTROL FOUND AND TIED OUT ON THIS SURVEY. COORDINATES WERE ADJUSTED USING STAR NET SOFTWARE. DIGITAL LEVELS WERE PERFORMED FOR THE VERTICAL COMPONENT.

CL CENTERLINE AS SHOWN ON SHEET C–0100 OF PLANS (50% SUBMITTAL).

BT BRASS TAG

● CONTROL POINTS SET BY OTHERS FOUND AND TIED OUT ON THIS SURVEY.

MAIN GRID LINE
SUB GRID LINE

C&A CHAUDHARY AND ASSOCIATES
CCSF CITY AND COUNTY OF SAN FRANCISCO
MMR MARTIN M. RON
TC TOP OF CURB
SHNR SHINER
FND FOUND
RCE REGISTERED CIVIL ENGINEER
REB REBAR
DPW DEPARTMENT OF PUBLIC WORKS FOR THE CITY AND COUNTY OF SAN FRANCISCO

BASED UPON 50% CONSTRUCTION DOCUMENTS

GRAPHIC SCALE
60 0 30 60 120 240
(IN FEET)
1 inch = 60 ft.

NOTES

1) SEE ARCHITECTURAL PLANS FOR GRID LAYOUT AND DIMENSIONS.
2) NAD 83 REFERS TO THE CALIFORNIA STATE PLANE COORDINATE SYSTEM. HORIZONTAL CONTROL FOR THIS SURVEY IS BASED UPON NAD83, CA ZONE 3, EPOCH 1991.35, GEOID 03.
3) UNITS ARE FEET AND REPRESENT GROUND (NOT GRID) DISTANCES.
4) THE VERTICAL DATUM IS BASED UPON NAVD 88.
5) CONTROL VALUES BASED UPON FIELD TIES SURVEYED BETWEEN APRIL 22 AND MAY 13, 2011 BY C&A FIELD CREW. CONTROL VALUES FOR POINTS 220–226 WERE BASED UPON FIELD TIES BETWEEN SEP. 9–14, 2011.
6) COORDINATES AS SHOWN REPRESENT GROUND COORDINATES AND WERE CONVERTED BY APPLYING A SCALE FACTOR OF GRID/ 99993411. THE ORIGIN OF THE SCALING FOR THE ENTIRE PROJECT IS CONTROL POINT NO. 39, GRID=GROUND COORDINATES: NORTH 2115074.592 EAST 6013813.502. (REFER TO NOTE 6 ON SHEET GT–0100) CONTROL POINT NO. 39 SEARCHED FOR AND NOT FOUND ON APRIL 23, 2011.
7) BASIS OF ELEVATION IS DPW SURVEY CONTROL PT. NO. 54, BEING A C&A MAG NAIL AND WASHER IN THE CURB AT THE EASTERLY CORNER OF 2ND AND HOWARD STREETS. ELEV.=25.36 NAVD 88 VERTICAL DATUM.
8) CENTERLINE DATA DERIVED FROM PLAN SHEET C–0100.

Note:
If this sheet is not 44" x 34", it has been revised from its original size. Scales noted on drawings/details are no longer applicable.

TRANSBAY JOINT POWERS AUTHORITY

CONSULTANT:

CHAUDHARY & ASSOCIATES, INC.
ENGINEERS SURVEYORS INSPECTORS
851 NAPA VALLEY CORPORATE WAY, SUITE G
NAPA, CALIFORNIA 94558

REVISIONS

NO.	DATE	DESCRIPTION	BY
0	5–4–2011	INITIAL CONTROL DRAWING	HRK
1	5–13–2011	ADD NOTES AND VALUES REGARDING CONTROL POINT 101	HRK
2	5–16–2011	CORRECT GRAMMAR IN SURVEY PROCEDURES STATEMENT 1	HRK
3	6–1–2011	DELETE CP–210 AND ADD CP–217	HRK
4	9–14–2011	EDIT VALUES FOR CONTROL POINT 200	HRK
4	9–14–2011	ADD CONTROL POINTS 220–226 AND DELETE CP 211 & 216	HRK
5	10–5–2011	EDIT VALUES FOR POINTS 58, 200, 203, 212, AND 217.	HRK
5	10–5–2011	ADD CONTROL POINTS 227–229.	HRK
6	12–23–2011	ADD CONTROL POINT 233 AND REVISE VALUES	HRK
7		REVISE VALUES TO READ TO NEAREST 0.01'	HRK

CONTRACT NO. 08–04–CMGC–000

PROJECT TITLE TRANSBAY TRANSIT CENTER PROGRAM

SAN FRANCISCO, CA

SHEET TITLE SURVEY CONTROL AND CONCEPTUAL GRID AND CENTERLINE PLANS AND NOTES

SURVEYOR SEAL
LICENSED LAND SURVEYOR HELMUT R. KORSTICK No. 7739 STATE OF CALIFORNIA

APPROVED:
PRINCIPAL ARVIN K. CHAUDHARY
PROJECT MANAGER ARVIN K. CHAUDHARY
APPROVED:
PROJECT SURVEYOR HELMUT R. KORSTICK
DESIGNED BY: H. KORSTICK
CHECKED BY:
DRAWN BY: H. KORSTICK
DATE: DECEMBER 23, 2011
SCALE: 1"=60'
REVISION 7
SHEET NUMBER 1 OF 1

Elmo Dec 23, 2011 – 7:40am Q:\2011\11-03-14 Webcor T&F\DWG\01-CNT-GEC-2011-HRK.dwg

EXHIBIT "S"

Transbay Transit Center – San Francisco, CA

<u>Traffic Control Plan</u>
Webcor/Obayashi
WO-TCP0001
REVISION 2
8/22/2012

GENERAL

The Webcor/Obayashi Joint Venture (W/O) Traffic Control Plan that will be implemented on the Transbay Transportation Center Project is an overall project policy, with each trade subcontractor contributing their specific plan as they come on board to the project. The primary function of this plan is to provide a framework to insure compliance with Specification Section 01 15 70. To assist in this effort, W/O has enlisted the services of a traffic control consultant (TCC) – Sandis Engineering. Award of this contract between Sandis Engineering and W/O was based on a competitive request for proposal (RFP) process referred to as TG05.4.

TCC is responsible for participating in all aspects of traffic control planning and implementation including, but not limited to:

- Traffic control design oversight;
- Coordination between trade subcontractor traffic control designs;
- Interface with City of San Francisco and other agencies as necessary;
- Participate in coordination efforts of the TJPA Representative;
- Oversight of implementation of approved traffic plans;
- Provide daily reports regarding status of traffic control measures;
- On call traffic control services as requested.

TRAFFIC PLAN REVIEW AND COORDINATION

TCC shall prepare a detailed "as built" traffic plan for approximately four blocks in all directions from the jobsite. This map will be based on SFMTA maps and will be augmented as appropriate per field review of existing conditions. This map will include all striping, signage, curb lines, curb cuts, curb painting, buildings and any other feature of the street layout and traffic control. Beyond the four block distance, the map will include street layout and striping configuration.

2… Once a trade subcontractor is under contract, W/O shall provide the trade subcontractor with the as-built plan in CADD format. The trade subcontractor will then be required to use this base map for preparation of all their traffic control plans. **A summary of the below criteria can be found in the attached Traffic Control Plan Preparation Packet. *…2***

The trade subcontractor is required to prepare and submit a complete traffic plan consistent with requirements of the project specification and all requirements per the City of San Francisco. The submittal must be made in a timely fashion to allow for the review timeframe prescribed in the specifications plus an additional four weeks for review by the TCC.

Upon receipt of the submittal from trade subcontractor, W/O will forward it to the TCC for review. The plan will be reviewed for adherence to specifications and for compatibility with previously submitted plans. Comments will be returned to the trade subcontractor who will make modifications as is appropriate.

When the trade subcontractor's traffic control plan is reviewed and coordinated with the TCC, it will be submitted to the TJPA Representative for approval. Submittal will be in compliance with Specification Section 01 15 70, paragraph 1.4B.

Upon approval by the TJPA Representative and SFMTA, the TCC will update the baseline traffic

control plan as appropriate. The baseline plan will be updated only when a change to the traffic pattern will be in place for three or more months. If the traffic control plan will be in place for less than three months, the plan will be superimposed over the base map for coordination but the baseline drawing will not be modified.

FIELD IMPLEMENTATION

It is intended that the TCC will maintain a regular, but not full time, presence on site. Similar to the traffic control design review, their scope of work is to review the trade subcontractor's adherence to city standards, project specifications and approved traffic control plans.

TCC review and assistance in in field coordination includes but is not necessarily limited to:

- Perform site review of traffic control;
- Note traffic control deficiencies;
- Coordinate correction of site deficiencies with W/O and trade subcontractor;
- Provide daily report of traffic control observations and corrective measures;
- Attend site meetings as necessary to review short term Special Traffic Permit and coordinate between subcontractors and SFMTA;
- Miscellaneous coordination with SFMTA as necessary;
- Review of pedestrian protection as it relates to vehicle traffic;
- Provide traffic control devices and personnel as required to augment traffic control efforts;
- Confirm proper training of subcontractor flagging personnel;
- Provide continuous oversight of traffic control for major construction operations as determined by CM/GC.

TASKS NOT CURRENTLY ANTICIPATED BY TCC

Training of flaggers for the trade subcontractors although it is an option should it become apparent that subcontractor employees need additional training.

Coordination of the 10b police officers between subcontractors will be the responsibility of the CMO.

Pedestrian control unless it is specifically impacted by vehicle traffic.

2… TRANSBAY TRANSIT CENTER – TRAFFIC CONTROL PLAN PREPARATION PACKET

Overview

The purpose of this packet is to provide the contractor with the information necessary to prepare a Traffic Control Plan (TCP) for their work in accordance with the requirements of the Project Specifications and the City and County of San Francisco (CCSF). It includes procedures, timing, a base map, plan sheet template and examples for use when preparing and submitting Traffic Control Plans (TCPs) for review and approval. The documents included in the TCP Packet are described below.

Flow Diagram

The flow diagram included within the TCP packet identifies the specific components and required time intervals for TCP submittal, review and approval. Please note time requirements for Plan review and approval. No work will be allowed without an approved plan. It is the contractor's responsibility to anticipate and allow for required lead times.

Base Map File

The AutoCAD drawing of the Base Map file included in this packet represents the City of San Francisco street layout as of the date indicated on the Base Map file title block. ALL proposed TCPs shall be created using this Base Map file as a starting point. It is crucial that proposed TCPs be provided on the same coordinate system as the Base Map file so multiple approved TCPs can be overlain in a composite exhibit. TCPs prepared using a different base or plan template will be rejected.

TCP Standards

Design Standards

The Traffic Control Plans shall be prepared and submitted in accordance with the following documents:

1. Transbay Transit Center Project Specification Section 011570 – Traffic Routing Work, dated September 23, 2010. A copy of this specification is included in the TCP Packet.

2. City and County of San Francisco Regulations for Working in San Francisco Streets (Bluebook), 7th Edition dated October 2006. Refer to the following link for a copy of this document: http://www.sfmta.com/bluebook

CAD Standards

The sheet TCP-001 provides a template with title block, symbols, and specific details pertaining to the presentation and setup of drawings to be used when preparing a TCP. The CAD standards identified under the Vendor Submittal Instructions, including layering configuration, title block, and symbols, shall be referenced and followed when creating all TCP AutoCAD drawings. The contractor shall include additional signs in the form of blocks, notes, and details as needed.

TCP Samples
There are three sample Traffic Control Plans included in this packet. These samples provide an example of how the TCPs shall be set up and configured.

TCP Submittals
All proposed Traffic Control Plans shall be submitted at 1”=80’ scale on 22”x34” sheet size in both pdf and AutoCAD 2007 formats. They are to be submitted electronically to Webcor-Obayashi’s trade package project manager. An important item to be included on all TCP sheets is the submittal tracking number. The tracking number consists of four segments separated by a period. The first segment is the 4-digit contract identification number, the second segment the 3-digit TCP number (provided by Webcor), the third segment is the 2-digit revision number, and the fourth the 3-digit page number. Refer to the Submittal Tracking Number Diagram below for additional direction.

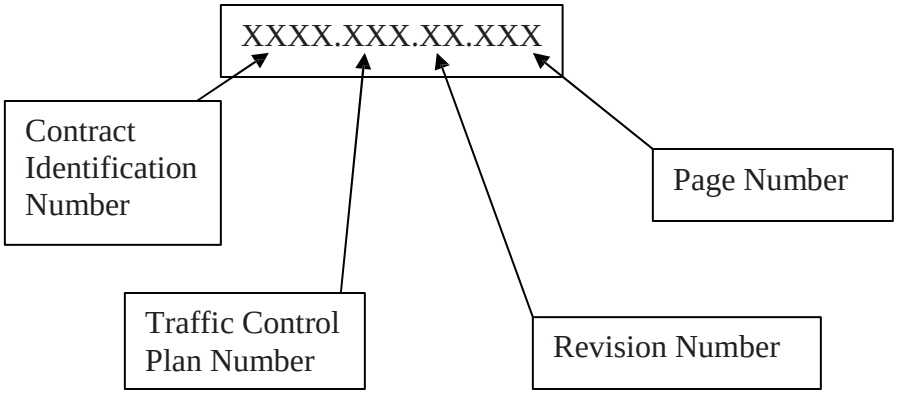

Submittal Tracking Number Diagram

TRAFFIC CONTROL PLAN SUBMITTAL REVIEW AND APPROVAL PROCESS

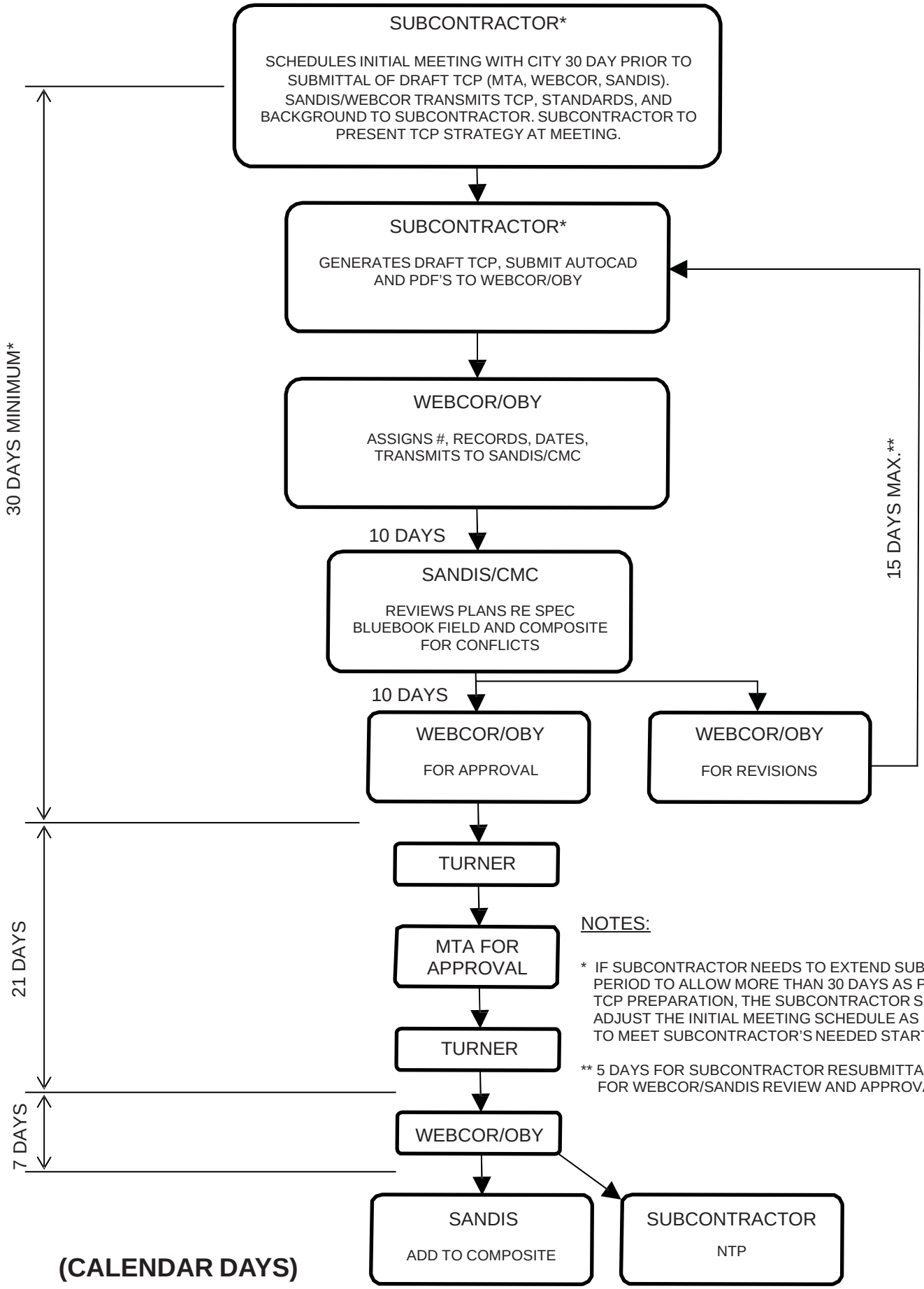

NOTES:

* IF SUBCONTRACTOR NEEDS TO EXTEND SUBMITTAL PERIOD TO ALLOW MORE THAN 30 DAYS AS PART OF TCP PREPARATION, THE SUBCONTRACTOR SHALL ADJUST THE INITIAL MEETING SCHEDULE AS REQUIRED TO MEET SUBCONTRACTOR'S NEEDED START DATE.

** 5 DAYS FOR SUBCONTRACTOR RESUBMITTAL. 10 DAYS FOR WEBCOR/SANDIS REVIEW AND APPROVAL.

(CALENDAR DAYS)

VENDOR SUBMITTAL INSTRUCTIONS

TRAFFIC CONTROL PLANS SHALL BE SUBMITTED AS FOLLOWS:

1) FIVE (5) HARD COPIES
2) ELECTRONIC COPY IN PDF AND AUTOCAD 2007 FORMATS
3) 11"x17" SHEET SIZE
4) 1"=80' SCALE
5) SHEET NUMBERING "TCP-###"
6) ELECTRONIC FORMAT PER TEMPLATE PROVIDED: SINGLE CAD FILE CONTAINING MULTIPLE LAYOUT TABS WITH A SINGLE TCP PER TAB. THE TCP SHALL BE DRAFTED IN MODEL SPACE ON TOP OF THE STREET BASE FILE WITH NOTES/LEGEND IN PAPER SPACE. MODEL SPACE SHALL BE DRAFTED AS FOLLOWS:
   a) EACH TCP PAGE SHALL CONSIST OF FIVE LAYERS WITH A PREFIX FOR THAT PAGE NUMBER. FOR EXAMPLE, PAGE 001 WOULD CONTAIN THE FOLLOWING LAYERS:
      001-TC-DIM
      001-TC-NOTES
      001-TC-SIGN
      001-TC-SIGNTEXT
      001-TC-STRIPELINE
      001-TC-WORKAREA
   b) ALL SYMBOLS, BLOCKS AND DIMENSIONS SHALL MATCH THOSE ON THIS SHEET IN SIZE, COLOR, AND LAYER. CREATE NEW BLOCKS USING SIMILAR COLOR AND SIZE FOR SIGNS/DEVICES NOT SHOWN HERE.
   c) INSERT STANDARD TITLE BLOCK PER SHEET. USE ATTRIBUTE EDITOR TO FILL IN TITLE BLOCK WITH APPLICABLE INFORMATION.
   d) TABLES, NOTES, AND LEGENDS SHALL BE IN PAPER SPACE PER SHEET ON LAYER XXX-TC-GENERAL, WHERE XXX IS THE PAGE NUMBER
   e) STANDARD TEXT STYLES, SIZES, DIM STYLES PER TEMPLATE
   f) STANDARD LAYER COLORS AND NAMES; AND CTB/PEN SETTINGS PER TEMPLATE
   g) FREEZE LAYERS IN VIEWPORTS AS NECESSARY TO ONLY SHOW THOSE NEEDED FOR THAT INDIVIDUAL SHEET.
7) REFER TO PROVIDED SAMPLE TCP PLAN FOR AN EXAMPLE OF THE FORMAT BEING IMPLEMENTED.

NOTE:
SAMPLE TEXT FOR FREESTANDING NOTES.

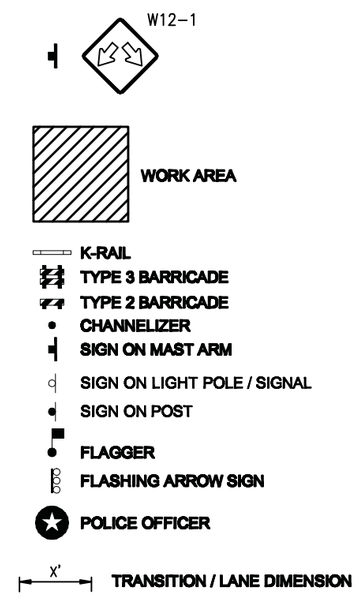

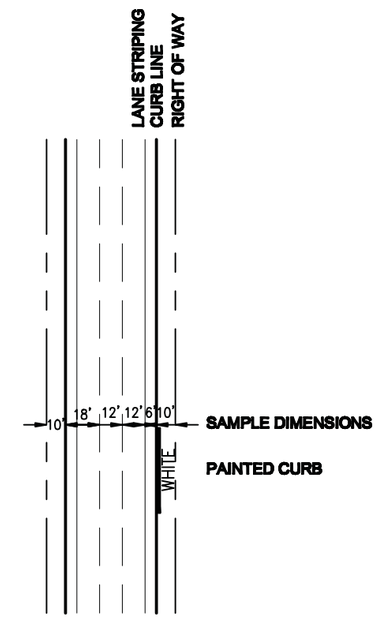

APPROVAL

TURNER

	DATE	INITIAL
RECEIVED		
TO SFMTA		
TO W/O WITH SFMTA APPROVAL		

SFMTA

	DATE	INITIAL
RECEIVED		
1ST REVIEW		
2ND REVIEW		
APPROVAL		

WEBCOR BUILDERS
OBAYASHI

TJPA
TRANSBAY JOINT POWERS AUTHORITY

VENDOR

SEAL

PROJECT 1
PROJECT 2
PROJECT 3

PROJECT

XXXX.XXX.XX.XXX

WEBCOR SUBMITTAL No.

No.	REVISION	DATE
X	-----	XX/XX/XX

SCALE: 1"=80'
DATE: XX/XX/XX

TRAFFIC CONTROL STANDARDS

TCP-001

SHEET

LEGEND

- TYPE II BARRICADE
- TYPE III BARRICADE
- CHANNELIZING DEVICE
- TRAFFIC CONE WITH CLIP ON SIGN
- SIGN
- ARROW PANEL (FLASHING ARROW)
- FLAGGER
- POLICE OFFICER
- WORK ZONE (ACTIVITY AREA) LIMITS

TABLE I.				
MINIMUM TAPER LENGTH FOR WIDTH OF OFFSET = 12 FT (3.6m)				
APROACH SPEED MPH (km/h)	MERGING L FT (m)	SHIFTING L/2 FT (m)	SHOULDER L/3 FT (m)	DOWN STREAM FT (m)
20 (30)	80 (21)	40 (10)	27 (7)	100 (30)
25 (40)	125 (37)	63 (19)	42 (12)	100 (30)
30 (50)	180 (55)	90 (29)	60 (18)	100 (30)
35 (60)	245 (84)	123 (42)	82 (25)	100 (30)
40 (70)	320 (158)	160 (79)	107 (53)	100 (30)
45 (80)	540 (180)	270 (90)	180 (60)	100 (30)
50 (90)	600 (205)	300 (101)	200 (68)	100 (30)
55 (100)	660 (225)	330 (113)	220 (75)	100 (30)
60 (110)	720 (245)	360 (124)	240 (82)	100 (30)
65	780	390	260	100
70	840	420	280	100

APPROACH SPEED (MPH)	MAXIMUM CHANNELIZER SPACING		
	TAPER (FT)	TANGENT (FT)	CONFLICT (FT)
20	21	42	10
25	26	63	13
30	32	63	15
35	37	74	18
40	42	84	20
45	48	95	23
50	53	106	25
OVER 50	74	148	35

NOTES:
1) WORK HOURS: 9:00 AM TO 3:00 PM

80 0 80 160
1" = 80' GRAPHIC SCALE

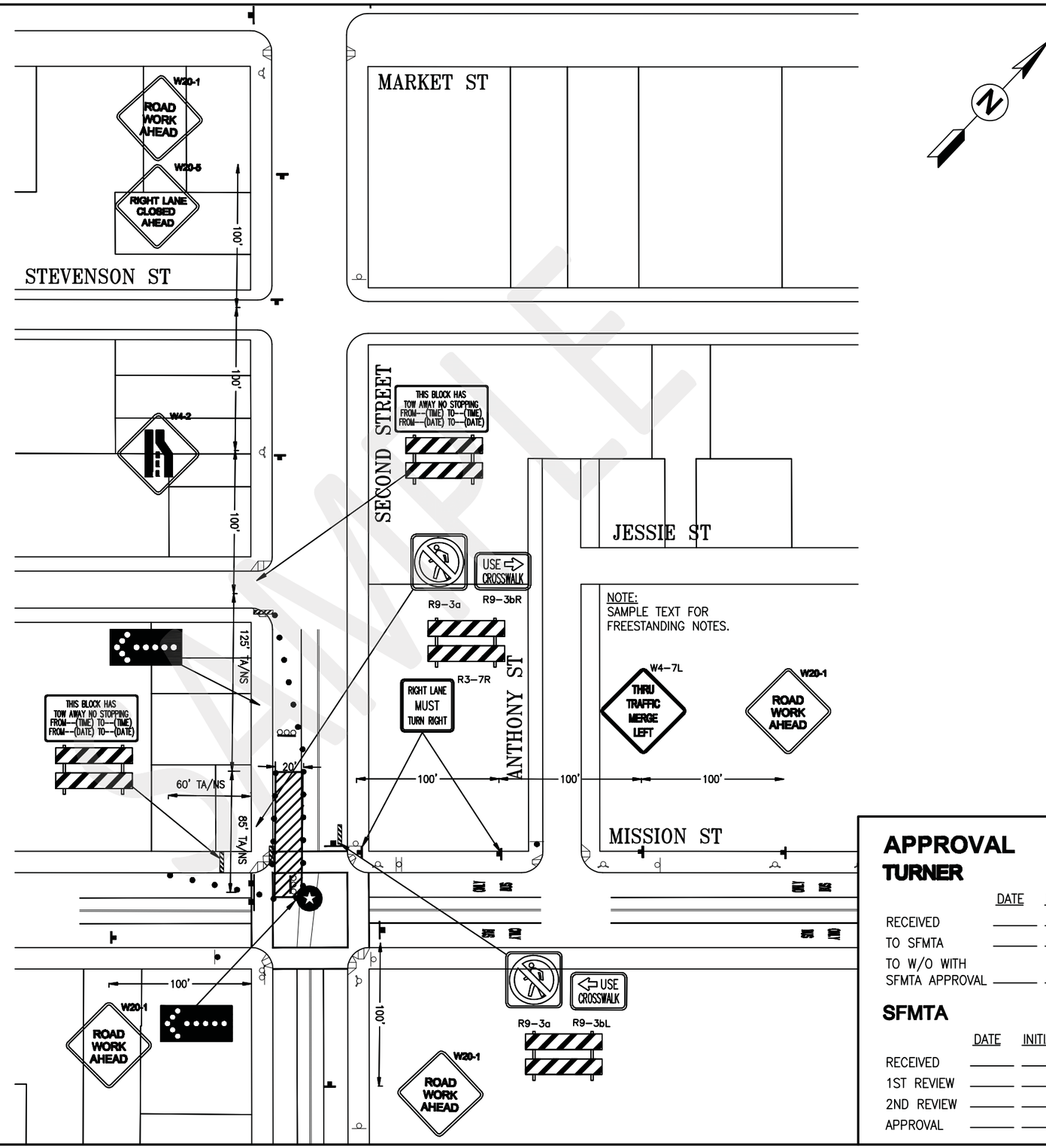

APPROVAL TURNER

	DATE	INITIAL
RECEIVED		
TO SFMTA		
TO W/O WITH SFMTA APPROVAL		

SFMTA

	DATE	INITIAL
RECEIVED		
1ST REVIEW		
2ND REVIEW		
APPROVAL		

WEBCOR BUILDERS
OBAYASHI
TJPA TRANSBAY JOINT POWERS AUTHORITY

VENDOR

SEAL

PROJECT

PROJECT

########

WEBCOR SUBMITTAL No.

No.	REVISION	DATE
X	-----	XX/XX/XX

SCALE: 1"=80'
DATE: XX/XX/XX

TRAFFIC CONTROL STANDARDS

TCP-002

SHEET

LEGEND

- TYPE II BARRICADE
- TYPE III BARRICADE
- CHANNELIZING DEVICE
- TRAFFIC CONE WITH CLIP ON SIGN
- SIGN
- ARROW PANEL (FLASHING ARROW)
- FLAGGER
- POLICE OFFICER
- WORK ZONE (ACTIVITY AREA) LIMITS

TABLE I.				
MINIMUM TAPER LENGTH FOR WIDTH OF OFFSET = 12 FT (3.6m)				
APROACH SPEED MPH (km/h)	MERGING L FT (m)	SHIFTING L/2 FT (m)	SHOULDER L/3 FT (m)	DOWN STREAM FT (m)
20 (30)	80 (21)	40 (10)	27 (7)	100 (30)
25 (40)	125 (37)	63 (19)	42 (12)	100 (30)
30 (50)	180 (55)	90 (29)	60 (18)	100 (30)
35 (60)	245 (84)	123 (42)	82 (25)	100 (30)
40 (70)	320 (158)	160 (79)	107 (53)	100 (30)
45 (80)	540 (180)	270 (90)	180 (60)	100 (30)
50 (90)	600 (205)	300 (101)	200 (68)	100 (30)
55 (100)	660 (225)	330 (113)	220 (75)	100 (30)
60 (110)	720 (245)	360 (124)	240 (83)	100 (30)
65	780	390	260	100
70	840	420	280	100

APROACH SPEED (MPH)	MAXIMUM CHANNELIZER SPACING		
	TAPER (FT)	TANGENT (FT)	CONFLICT (FT)
20	21	42	10
25	26	53	13
30	32	65	15
35	37	74	18
40	42	84	20
45	48	95	23
50	53	106	25
OVER 50	74	148	35

NOTES:
1) WORK HOURS: 9:00 AM TO 3:00 PM

80 0 80 160
1" = 80' GRAPHIC SCALE

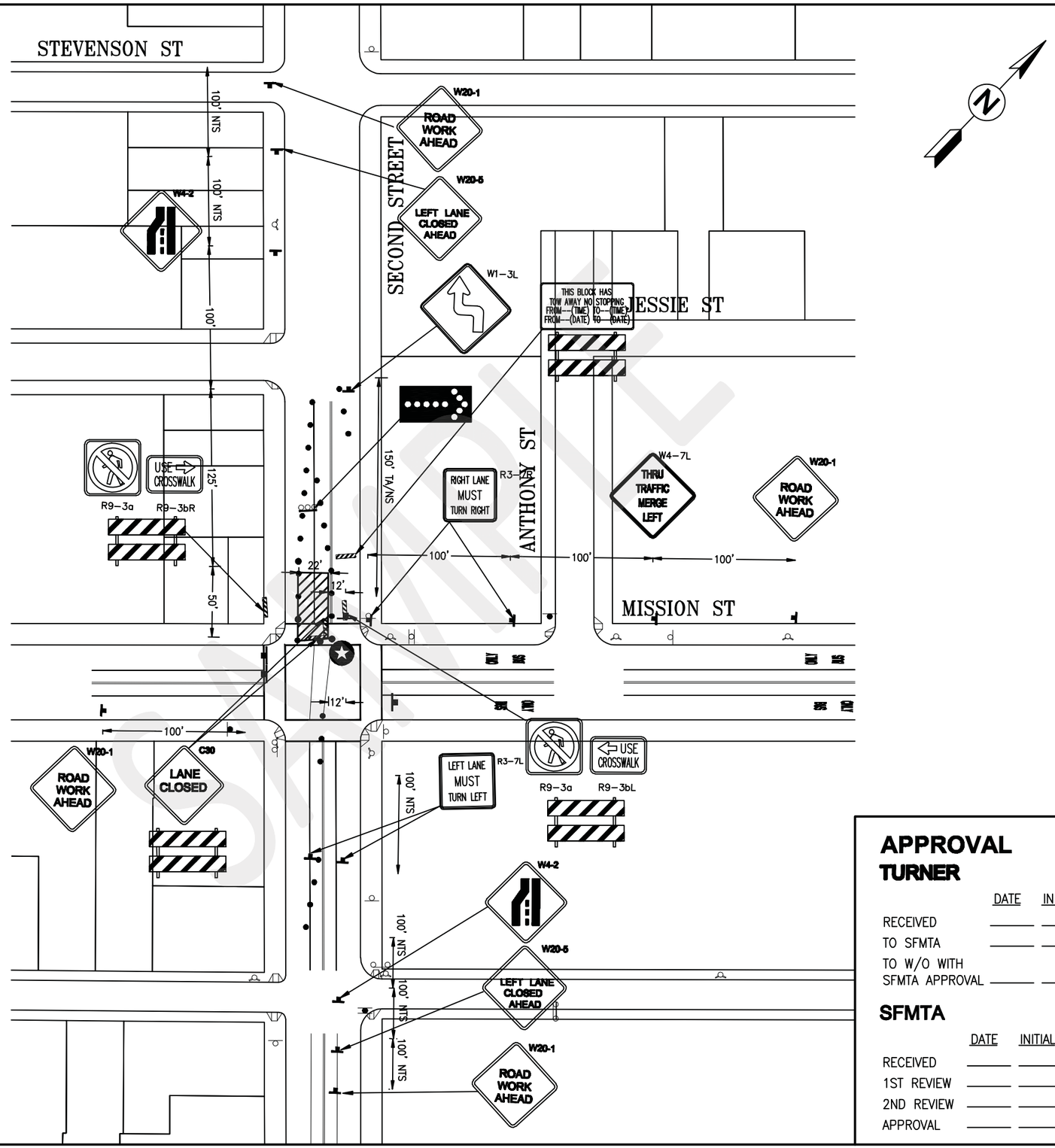

APPROVAL

TURNER

	DATE	INITIAL
RECEIVED		
TO SFMTA		
TO W/O WITH SFMTA APPROVAL		

SFMTA

	DATE	INITIAL
RECEIVED		
1ST REVIEW		
2ND REVIEW		
APPROVAL		

WEBCOR BUILDERS
OBAYASHI
TJPA TRANSBAY JOINT POWERS AUTHORITY

VENDOR

SEAL

PROJECT

PROJECT

WEBCOR SUBMITTAL No.
#######

No.	REVISION	DATE
X	-----	XX/XX/XX

SCALE: 1"=80'
DATE: 08/10/11

TRAFFIC CONTROL STANDARDS

SHEET

TCP-003

LEGEND

- TYPE II BARRICADE
- TYPE III BARRICADE
- CHANNELIZING DEVICE
- TRAFFIC CONE WITH CLIP ON SIGN
- SIGN
- ARROW PANEL (FLASHING ARROW)
- FLAGGER
- POLICE OFFICER
- WORK ZONE (ACTIVITY AREA) LIMITS

TABLE I.				
MINIMUM TAPER LENGTH FOR WIDTH OF OFFSET = 12 FT (3.6m)				
APROACH SPEED MPH (km/h)	MERGING L FT (m)	SHIFTING L/2 FT (m)	SHOULDER L/3 FT (m)	DOWN STREAM FT (m)
20 (30)	80 (21)	40 (10)	27 (7)	100 (30)
25 (40)	125 (37)	65 (19)	42 (12)	100 (30)
30 (50)	180 (55)	90 (28)	60 (18)	100 (30)
35 (60)	245 (84)	123 (42)	82 (28)	100 (30)
40 (70)	320 (158)	160 (79)	107 (53)	100 (30)
45 (80)	540 (180)	270 (90)	180 (60)	100 (30)
50 (90)	600 (203)	300 (101)	200 (68)	100 (30)
55 (100)	660 (225)	330 (113)	220 (75)	100 (30)
60 (110)	720 (248)	360 (124)	240 (83)	100 (30)
65	780	390	260	100
70	840	420	280	100

APROACH SPEED (MPH)	MAXIMUM CHANNELIZER SPACING		
	TAPER (FT)	TANGENT (FT)	CONFLICT (FT)
20	21	42	10
25	26	65	13
30	32	65	15
35	37	74	18
40	42	84	20
45	48	96	23
50	55	110	25
OVER 50	74	148	35

NOTES:
1) WORK HOURS: 9:00 AM TO 3:00 PM

80 0 80 160
1" = 80' GRAPHIC SCALE

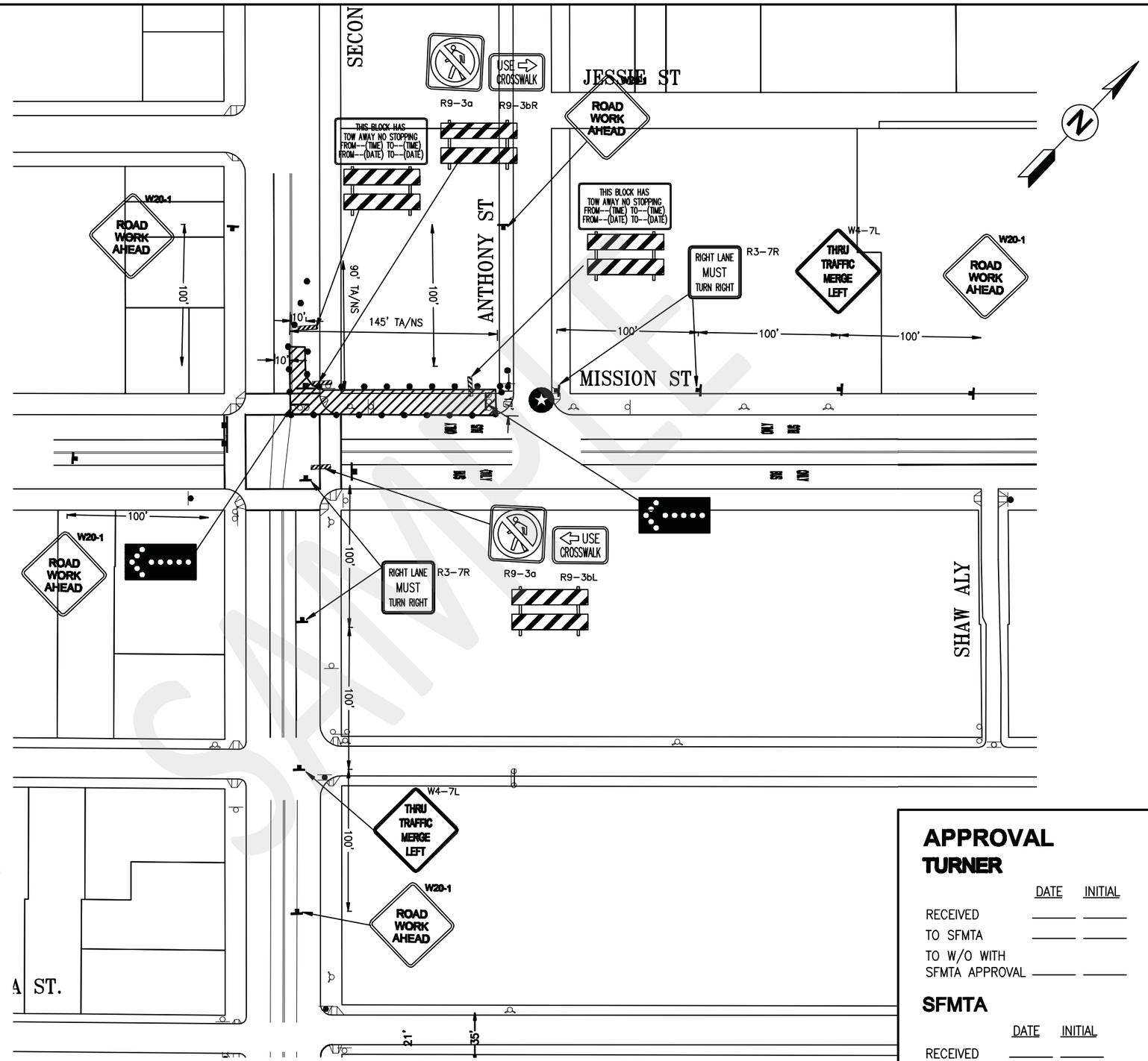

APPROVAL

TURNER

	DATE	INITIAL
RECEIVED		
TO SFMTA		
TO W/O WITH SFMTA APPROVAL		

SFMTA

	DATE	INITIAL
RECEIVED		
1ST REVIEW		
2ND REVIEW		
APPROVAL		

WEBCOR BUILDERS
OBAYASHI
TJPA TRANSBAY JOINT POWERS AUTHORITY

VENDOR

SEAL

PROJECT

PROJECT

WEBCOR SUBMITTAL No.

#######

No.	REVISION	DATE
X	-----	XX/XX/XX

SCALE: 1"=80'
DATE: 08/10/11

TRAFFIC CONTROL STANDARDS

SHEET

TCP-004

EXHIBIT "W"

The information, processes, techniques, material and other matters contained in the Quality Commissioning Procedures and Guidelines are proprietary, confidential, and unique to WEBCOR/OBAYASHI.

The Quality Commissioning Procedures and Guidelines shall only be used for WEBCOR/OBAYASHI only.

Any other use without the expressed written consent from an Officer of WEBCOR/OBAYASHI is prohibited. Any unauthorized use could give rise to liability under the California Civil Code Sections 3426 et seq. involving Uniform Secrets Act, the California Business and Professions Code Sections 17200 et seq. involving Unfair Competition and 17500 et seq. involving Unfair Practices, the common law of unfair competition and interference with contractual relations and prospective advantage.

Table of Contents

QUALITY COMMISSIONING PROCEDURES AND GUIDELINES
Exterior Skin and Waterproofing Systems

- ✓ **Roofs**
- ✓ **Decks**
- ✓ **Windows**
- ✓ **Curtain Walls**
- ✓ **Exterior Wall Systems (Precast, Stucco, EIFS, GFRC)**
- ✓ **Water Shedding Systems**
- ✓ **Flashings**
- ✓ **Expansion Joints**
- ✓ **Caulking, Sealants**
- ✓ **Primary and Secondary Water Barrier Systems**
- ✓ **Above & Below Grade Waterproofing**
- ✓ **General Waterproofing Systems**

1.0 Purpose

The purpose of this procedure and guideline is to set forth a commissioning process, which will ensure that the building's exterior envelop and waterproofing systems perform and function in conformity with design intent and to provide a means of verifying the implementation of these systems based on the project specifications, design and applicable industry standards.

2.0 Definition of Commissioning

The term "Commission" refers to a Quality Assurance process by which the building's exterior envelop and waterproofing systems (i.e., below and above-grade waterproofing, decks, roofs, caulking, plaster, precast concrete and GFRC, curtain-wall, flashing, expansion joints, etc.) are provided, installed and tested in order to verify the systems perform in accordance with the contract documents and the design intent.

Commissioning entails the development of a clear and complete process that verifies the systems design and operational intent. It also is to verify that the exterior envelop and waterproofing systems and its components are installed according to the contract documents, manufacturer's recommendations and published industry standards and that the system receives adequate installation and performance inspections by the installing contractor.

The process must include verifying and documenting the installation steps, phases, and system performance with respect to the design intent and the contract documents. Commissioning is a team effort that requires cooperation by all parties to succeed.

3.0 Description of the Commissioning Process

Commissioning is a **"systematic"** process for achieving, validating and documenting the performance of building systems as so that it meets the design intent and requirements.

The process extends through all phases from design to occupancy, and extending through the warranty period. Numerous checks and inspections shall be performed at each stage of the process to ensure that established procedures are followed. The process also includes training of facility operational personnel to ensure continued efficient use of the exterior envelop and waterproofing systems as originally designed and installed.

This guideline provides a uniform, integrated and consistent approach for the commissioning of all waterproofing systems as well as assisting in insuring product and design compatibility. Since many building waterproofing systems are integrated, a deficiency in one system or component may result in sub-optimal performance and failure among others.

4.0 Commissioning Plan

Commissioning is a **"Quality Process"** for validating the system and component design performance.

The reports from the commissioning process are not just test reports, but reports that document design, installation, inspections, and particular tests and or evaluation procedures. The commissioning plan is continually updated to reflect changes in program and design of the waterproofing system(s). Commissioning reports shall document and record the results of the commissioning process.

Each Trade Subcontractor's specific commissioning plan must be neatly organized in a consistent manner that reflects the nature of the building systems and their performance. The commissioning plan shall include schedules, requirements and procedures.

Trade Subcontractor(s) shall be responsible for the timely and efficient completion of all commissioning in accordance with the Subcontract Agreement.

At no time shall any work be permitted to commence without a WEBCOR/OBAYASHI' approved Trade Subcontractor Waterproofing Commissioning Program.

Failure to do so may require Trade Subcontractor to assume all related costs and expenses in accordance with the Subcontract Agreement.

In addition, Trade Subcontractor may also be required to assume all related cost should WEBCOR/OBAYASHI find it necessary to develop, manage and or perform any Trade Subcontractor commissioning work.

5.0 Objectives

The fundamental objectives of the commissioning process are:

5.1 Create a procedure to verify and provide documentation that the waterproofing performance of the facility meet the design requirements.

5.2 Enhance communication by documenting data and decisions throughout all phases of the project.

5.3 Validate and report that the performance of waterproofing systems meets design intent.

5.4 Provide a means of Quality Control and Quality Assurance (QA/QC) throughout all phases of the waterproofing system(s) installation, inspection, and testing process.

6.0 Contractors Normally Participating in the Commissioning Process

- ✓ Waterproofing Consultant
- ✓ Architect
- ✓ Structural Engineer
- ✓ Mechanical
- ✓ Plumbing
- ✓ Electrical
- ✓ Fire Sprinkler
- ✓ Glass Systems
- ✓ Caulking
- ✓ Brick, Tile, Precast, GFRC, and Stone
- ✓ Fountains and Ponds
- ✓ Swimming Pools & Spas
- ✓ Roofing
- ✓ Insulation
- ✓ Flashing & Sheetmetal
- ✓ Waterproofing Contractors
- ✓ Concrete (If waterproofing admixtures are included by design)
- ✓ Stucco, EIFS, DEFS systems
- ✓ Elastomeric Painting
- ✓ Rough Carpentry (Wood cladding)
- ✓ Architectural Metal Cladding
- ✓ Expansion Joint Systems
- ✓ Water Tanks
- ✓ Special Systems or Components

7.0 Commissioning Team

The commissioning team members may consist of the following:

- ✓ WEBCOR/OBAYASHI - Project Team as required

- ✓ Owner - Designated representative of the owner, building operator/engineer, and/or the owner's construction management firm
- ✓ Engineers - Architect and Designers
- ✓ Waterproofing Contractor
- ✓ Waterproofing Consultant
- ✓ Flashing / Sheet Metal Contractor
- ✓ Exterior Skin Contractor
- ✓ Roof Contractor
- ✓ Glass and Curtain Contractor
- ✓ Caulking and Sealants Contractor
- ✓ Commissioning Agent (CA)
- ✓ Mechanical Contractor
- ✓ Plumbing Contractor
- ✓ Fire Sprinkler Contractor
- ✓ Electrical Contractor
- ✓ Testing Contractor
- ✓ Other as necessary

8.0 Meetings

Regularly scheduled commissioning meetings of **the entire team** shall be conducted for site coordination, communicating issues of concern, resolving conflicts, reporting on system process and status, identifying urgent work and all deficiencies.

Commissioning meetings are critical to the **Quality** of the commissioning process as well as timely completion of the project.

9.0 Trade Subcontractor Performance Requirements

9.1 Designation of the primary person who will be responsible, accountable, and act as the main contact person for all commissioning communications. Provide organizational chart indicating personnel who will be involved in the project. The chart should indicate factory, office, and on-site field personnel.

9.2 Review of drawings and specifications for completeness, appropriateness of details, and acceptance by Trade Subcontractor thereof.

9.3 Review WEBCOR/OBAYASHI standard details.

9.4 Preparing and submitting documentation of Trade Subcontractor's respective materials and systems to be integrated into the overall Commissioning Plan.

9.5 Submitting information on the intended commissioning protocol used on materials, and the integration into the system as a whole.

9.6 Provide a presentation of the commissioning process to WEBCOR/OBAYASHI, the Owner and or the owner's representatives. Demonstration shall indicate compliance with the Trade Subcontractor Commissioning requirements as outlined in this document.

9.7 Submitting shop drawings detailing waterproofing system layout as outlined in the contract documents. Shop drawings shall reflect all conditions present in the building, including but not limited to the following:

a. Conditions where different materials meet (i.e. windows to plaster or stone to plaster).

b. Corner conditions.

c. Conditions where vertical planes meet horizontal planes (i.e. soffits and sills).

d. Expansion joints and control joints.

e. Flashing.

f. Penetrations (i.e. Z-ducts, electrical outlets, louvers).

g. Conditions typically utilized by Trade Subcontractor's common practices.

Shop drawings shall include installation drawings indicating the planned sequence of installation of all components.

9.8 Providing means and method for preliminary testing of the exterior envelop and waterproofing systems with manufacturer's representative present as required:

a. Caulking: Include complete coordination with the caulking manufacturer's representative to assure compatibility of the caulking system with the

surrounding substrate and finishes. Trade Subcontractor shall submit caulking samples including manufacturer's specifications for materials, color, cleaning procedure, required primers, proper backer rod, installation procedures, testing requirements and results. Testing of caulking samples between all combinations of materials shall be performed by qualified testing agencies in direct accordance with A.S.T.M. Standard Test Method C794 (75), including seven (7) day immersion. A letter from the Caulking Manufacturer shall be submitted approving all testing procedures, the installation procedure and the use of the specified materials for the intended application. Any materials installed without such approval that may be in conflict with the approved procedures or of unacceptable color and appearance will be removed and replaced at the Trade Subcontractor's expense.

b. Windows and Sliding Glass Doors: Assemblies shall be field tested in accordance with American Architectural Manufacturers Association (AAMA) 502-02 Voluntary Specification for Field Testing of Windows and Sliding Glass Doors using Test Methods A and B, testing a minimum of 1% of the products for air leakage resistance and water penetration resistance as specified for various stages of the product installation.

9.9 Reviewing all required testing under the witnessing of WEBCOR/OBAYASHI, Building Owner, and or the Owners representatives.

9.10 Correcting all system deficiencies at Trade Subcontractor expense.

9.11 Obtaining all required permits, code required inspections and final certifications.

9.12 Preparing complete as-built record drawings made from an original set that has been marked up throughout the duration of the project. Drawings must indicate all work as it was actually installed showing change order revisions, field changes required to meet the working conditions, and any other items that will affect or reflected in the operation and maintenance of the facility.

9.13 Obtaining all manufacturer’s warranties and guarantees.

9.14 Organizing the O&M manuals, if any, from suppliers and manufacturers.

9.15 Performing any specified training for the facility’s operational staff.

10.0 Information Management

The management and continued organization of the commissioning information shall be the sole responsibility of the Trade Subcontractor.

WEBCOR/OBAYASHI and the Trade Subcontractor shall mutually agree on the location were all the commissioning information and documentation shall be stored.

The Trade Subcontractor shall make every effort to continually update and manage the information throughout the commissioning process. WEBCOR/OBAYASHI and the Building Owner may review the commissioning information provided by the Trade Subcontractor at any time for updates, accuracy and completeness.

WEBCOR/OBAYASHI may elect to withhold or make appropriate adjustments to the Trade Subcontractor's monthly progress billing in the event the commissioning information or performance requirements as described in the Waterproofing Quality Commissioning Procedures & Guidelines are not being performed, managed and updated by the Trade Subcontractor.

11.0 Trade Subcontractor Commissioning Submittal Requirement

Each Trade Subcontractor has a responsibility to WEBCOR/OBAYASHI and the Building Owner to comply with the terms of the contract and to verify that the design intent of the waterproofing systems for the project is achieved.

Each Trade Subcontractor is required to provide two completed commissioning manuals containing the information outlined in Section 19 - Commissioning Binder Tab Index of this guideline. Each proposed formatted “3-ring” binder containing all information, including blank forms shall be provided to WEBCOR/OBAYASHI and the Owner for **“review and comment”** before the commissioning process begins, or by an agreed upon date.

WEBCOR/OBAYASHI, the Owner and the owner representative shall review the information and return it to the Trade Subcontractor within **two-week** time with all comments.

Each Trade Subcontractor shall make all required changes as agreed, to the commissioning manuals and resubmit them to WEBCOR/OBAYASHI within **two-weeks**.

Each Trade Subcontractor shall schedule and provide a formal demonstration of their commissioning process to WEBCOR/OBAYASHI, the Owner and the Owners representative after all required changes to the manuals have been satisfactory completed. Demonstration shall indicate compliance with the Trade Subcontractor Waterproofing Commissioning requirements as outlined in this document.

Each Commissioning Manual **shall be neatly organized** using appropriate tabs, dividers, table of content, index, etc. as required for easy referencing. Refer to Section 19 Commissioning Binder Tab Index for a standard binder organization. All Commissioning Manual(s) **must be user friendly**.

12.0 Commissioning Binder Tab Index

Tab 1. **Project design criteria specifications –** Provide information that describes the overall design criteria and performance requirements for the waterproofing system(s).

Tab 2. **Manufacture products and components** – Provide complete submittal list of all components that shall be contractually provided and installed.

Tab 3. **Manufacture installation instructions –** Provide manufacture documentation insuring that the system and components installation complies with all Manufacture requirements to maintain performance and guarantee obligations.

Tab 4. **Manufacture details –** Provide manufacture details or published industry standards for penetrations and terminations interfacing with other installed systems.

Tab 5. **Design transition review –** Provide design review comments and concerns on transition interfaces to other s or other compatibility issues.

Tab 6. **Quality Assurance / Quality Control Program –** Provide QAQC program with complete field inspections and checklists.

Tab 7. **Documentation –** Trade Subcontractor shall maintain a separate field binder documenting the QAQC inspections and field-testing for all installed work.

Tab 8. **Field mock-up and testing –** Provide information on mock-up or field performance tests that shall be preformed for all installed system(s). Provide manufacture recommendations or published testing standards used. If no performance testing is preformed, Trade Subcontractor shall provide documentation on how each system is performing in accordance to the documented design intent and contract warranty requirements.

Tab 9. **Schedule –** Provide schedule for, shop drawing devolvement, submittals fabrication, delivery and installation.

Tab 10. **Agency and factory test reports –** Provide all factory, agency, and field performance-testing reports on installed systems.

Tab 11. **Factory and Trade Subcontractor guarantee information –** Provide warranty responsibilities and durations for all systems and components installed.

Tab 12. **Owner Training –** Provide (O&M) and training for all required service and maintenance requirements as it extends throughout each system to maintain warranty. Include owner sign-off sheets verifying training.

Tab 13. **Attic Stock –** Provide list of spare material that shall be supplied by Trade Subcontractor to owner – Paint, applied materials, gaskets, handles, glazing, or patching products.

Tab 14. **As-Built Drawings –** Provide completed set of drawing and details accurately reflecting all installed and completed work.

Tab 15. **Material Safety Data Sheets –** Provide all Material and Data Safety Sheets (MSDS).

13.0 Identifying the Defects

It is the intent of the commissioning process to avoid defects in waterproofing systems. A standard of care exhibited during the commissioning process should anticipate potential defects and determine appropriate solutions prior to the installation of these systems. In the event that defects do occur, proper defect identification will help determine the repair needed and assist in selecting the appropriate method and materials.

It is important to acknowledge which factors have caused deficiencies in the waterproofing system and its components, and how a deficiency in one system may influence or amplify another. Careful and thorough defect identification is critical to obtain long-lasting, quality repairs. It is critical and necessary to eliminate the cause of the defect and not solely treat the symptom.

Each Trade Subcontractor shall be responsible for determining the cause and origin of various problems as it pertains to their contractual scope of work. Failure to do so may require Trade Subcontractor to assume all related costs and expenses for damages, repairs performed by others, testing, special inspections, and consultant fees.

14.0 Applicable Industry Standards

Unless the Contract Documents include more stringent requirements, applicable published construction industry standards shall be utilized. Where compliance with two or more standards is specified for quality or quantity levels, comply with the most stringent requirement.
Where sections of the specifications require that a product, material, installation, or test complies with a specified industry standard, the Trade Subcontractor shall obtain copies directly from the publication(s) source and include the information in the submitted commissioning information.

Each Trade Subcontractor engaged in construction on the project must be familiar with published industry standards applicable to their construction activity.

15.0 Schedules

An initial schedule shall be developed by the Trade Subcontractor identifying dates, times, and durations for shop drawings, approval of submittals, material fabrication, product delivery, acceptance, installation, testing and completion.

The schedule shall also include any commissioning task that shall be performed on waterproofing systems that may involve or affect other related building systems.

Each Trade Subcontractor shall update schedules, daily, weekly, monthly, or as required to keep WEBCOR/OBAYASHI and the Owner informed of the activities performed. This schedule will indicate appropriate milestones during the installation to allow WEBCOR/OBAYASHI and or the Owner the ability to observer and witness system installations prior to being cover up by subsequent s. The schedule will indicate milestone dates for Trade Subcontractor inspection and testing.

16.0 Execution of Inspections and Checklists

Trade Subcontractor and or vendors shall schedule initial inspections and checklist review with the commissioning team. The inspections and reviews shall be directed, executed, and documented by the Trade Subcontractor or vendor.

To document the process, the Trade Subcontractor performing the task shall provide and complete all documentation forms and checklists. (See attached sample checklist)

17.0 Field Inspections

One of the most important commissioning activities for waterproofing systems is field inspections. The field inspection process shall serve as a method and means of documenting the installation process as well as indicate variations between contractual design and construction.

Each Trade Subcontractor shall identify in detail the scope of their field inspections, and the types of field procedures that will be required to obtain the necessary information to provide a complete waterproofing quality control evaluation at the completion of the job.

18.0 Field Witnessing of Trade Subcontractor's Quality Control

WEBCOR/OBAYASHI, the Owner, consultants and the Architect reserve the right to witness the waterproofing system installation at any time. Spot checks shall be conducted on a random basis. If inconsistencies are discovered in quality, performance, or if commissioning information differs from those submitted, the Trade Subcontractor may be required to completely remove and remedy all conditions where the inconsistencies occurred at no additional cost or impact to the schedule.

Witnessing shall include all or part of, but not limited to the following:

14.1 Mock ups

14.2 Waterproofing component and system installation

14.3 System inspection and checks

14.4 Performance tests

14.5 Special Inspections

19.0 Documentation

Trade Subcontractor shall maintain a separate field binder documenting quality control inspections and field-testing for all installed work. Documentation shall include dates, quality control field checklist, reports with inspected locations defined by grid lines and elevations. Provide a dated photo log, documenting inspected areas and general sequence of installed work for the duration of the project.

20.0 Testing and Methods

The objective of field-testing is to correlate paths of moisture infiltration and to observe the source of damages. Moisture entering a building during extreme weather may be obvious, but the most reliable method to discover the infiltrating path is to recreate the leakage condition in a controlled manner. Testing also allows verification of the theory for the cause of leakage.

As all system and component tests are unique to some degree, there may not be one standard or method for testing that can be applied to all. There are several methods, standards, governing requirements, and manufacture recommendations, etc., which should be applied.

There are three types of acceptable testing methods that can be used during the investigation. All of which must be approved by WEBCOR/OBAYASHI. These testing categories include:

- ✓ Non-Destructive Testing
- ✓ Destructive Testing
- ✓ Laboratory Testing

20.1 Non-Destructive Testing

Non-destructive testing uses a variety of non-invasive tools. This type of testing causes little or no damage or interference to the building envelope. The various methods of non-destructive testing include:

a. *Rilem Tube* - This calibrated device is adhered to exterior masonry walls to determine the porosity and condition of brick masonry units, mortar joints, head joints, and embedment joints.

b. *Water Spray Rack (ASTM E1105)* - This test simulates a wind-driven rain condition on a facility. It can assist in determining the specific cause and origin of moisture infiltration when it is used to test independent components of the envelope. Spraying water over a large area in an uncontrolled fashion will not reveal specific causes of water infiltration.

c. *Hose Spray Test (AAMA 501.2)* - This test method also simulates wind-driven rain in small segmented areas using a standard garden hose in which a calibrated nozzle is attached with a pressure gauge. The spray is

directed at a specific joint, crack, or defect to reveal potential moisture intrusion.

d. *Differential Pressure Test (ASTM E1105)* - A pressure chamber is constructed on the interior of the facility at a specific location to test moisture driven through an assembly or component. The assembly or component is subjected to a negative force while simultaneously a spray rack is directed at the assembly to draw the moisture into the facility to simulate a negative pressure under a wind-driven rain condition.

e. *Infra-Red Thermography* - Infra-red Thermography photographs the building exterior to determine the locations of wet components. Components, such as insulation and sheathing, etc., will act as heat sinks if they contain high levels of moisture. During the day, moist and dry components absorb heat. At night, the moist areas release the heat much slower than the dry areas. By reading the heat signature, Infrared Thermography will help expose the problem areas. Small test cuts may be required to verify moisture areas.

f. *Soundings (ASTM D4580)* - There are different ways to perform sounding tests including the hammer tap test. In this test, a 16 oz. hammer is tapped against concrete for sound. A hollow sound indicates areas where the concrete has separated from the reinforcing steel, typically due to exfoliation or corrosion of the steel. Another method of sounding is to chain drag a heavy 15 ft. link chain along a concrete surface to listen for hollow sounds, indicating defective concrete. This method can cover larger areas effectively and is commonly used on parking garages and loading docks.

g. *Pachometer Survey* - This test uses a magnetic device used to locate embedded steel reinforcement and help determine the concrete cover over the reinforcement. Generally, the Pachometer is fairly accurate when measuring ¼ inch to 3-inch thick concrete cover and when reinforcing placement is not too congested.

h. *Poly-sheet Tape-down* - This test determines the presence of moisture coming through a concrete surface, typically a slab-on-grade type of assembly where the typical problem is tile or membrane separation from the floor. A 2’ x 2’ section of polyethylene is sealed to the concrete with duct tape and removed 24 hours later. If there is moisture beneath the polyethylene, it is a good indication that there is a vapor drive through the concrete section.

i. *Glass-Slide Epoxy or Crack-o-meter* - This device is sealed in place over a crack and periodically checked to determine if any movement has occurred. If movement has occurred, the glass will crack or the meter will record movement.

j. *Optical Illuminated Boroscope* - A boroscope is inserted into a 5/8-in. diameter pilot hole through an exterior wall system and allows the cavity walls of brick veneer, stud wall backup of exterior insulated finish systems (EIFS), or other types of constructions to be observed without large-scale destructive testing.

k. *Smoke/Dust Tracer* - The smoke/dust tracer helps to find air infiltration. It is moved across the interior face of a window to observe the smoke and dust particles coming through the assembly.

l. *Moisture Meter* - A Delmhorst meter is a digital device that detects the presence of moisture in various building components. This test is typically accompanied by a gravimetric analysis (oven drying of samples), which is used to confirm the results of the Delmhorst meter.

m. *Flashlight and mirror* - These simple tools can be very useful to detect problem areas. Placing the mirror into the plenum or behind difficult-to-access areas with the flashlight will allow observation of concealed conditions.

20.2 Destructive Testing

When the main objective is to determine the existing composition and configuration of concealed assembly conditions, destructive testing may be warranted. The most common methods of destructive testing are test cuts and borings.

Any type of destructive testing must be reviewed and approved by WEBCOR/OBAYASHI.

a. *Roof Testing* - Test cuts in the roof assembly may be necessary to determine the condition of the underlying insulation and substrate. Cutting into the system may help verify whether roofing problems are causing corrosion of the steel deck, or a spalled and cracked concrete deck, etc. Test cuts may also expose the as-built configurations of the flashing components at roof-to-wall locations, curb locations, etc. This information is critical to the appropriate remedial design and/or repairs.

b. *Exterior Wall/Skin Testing* - Test cuts on exterior walls may be required to identify the origin of moisture infiltration. For masonry walls, it is most effective to make test cuts at window heads and sills, and at any through-wall flashing locations that may be suspected of allowing moisture intrusion. Masonry test cuts may expose defective through-wall flashing that is allowing moisture intrusion. Test cuts may also help determine the underlying conditions of the steel components in wall systems, including wall ties, reinforcing steel, sub-steel columns, etc.

20.3 Laboratory Testing

Destructive testing is also used to obtain samples for lab analysis. Samples of sealants, coatings, painted finishes, roofing materials, etc. can be sent to a laboratory to determine the presence of lead or asbestos. Samples of masonry or concrete can also be tested to help identify causes of moisture/air infiltration (descriptions of these analyses follow).

Laboratory testing may help obtain a better understanding of existing material types, presence of contaminants, and the possibility of hazardous components.

This type of testing can also provide valuable information concerning proper surface preparation, material selection, and implementation of repairs.
The following laboratory tests are some of the more useful when performing building envelope evaluations:

a. *Gravimetric Analysis* - This test will determine moisture content. After weighing and recording the in-situ existing sample, completely dry the sample in an oven and re-weigh it. The weight difference indicates moisture content and is particularly useful for insulating materials. Testing moisture contents of samples is critical to verify results from non-destructive moisture scans.

b. *Petrography* - Petrography determines the "make-up" of concrete. This test will indicate the size and type of aggregate, air/void ratio, type of cement, and general mix design data of the concrete. Most materials testing lab can perform this test.

c. *Air Entrainment* - Provides an indication of the existing concrete's durability and freeze-thaw resistance. Air entrainment is generally indicated by petrography.

d. *Presence of Carbonization* - Accomplished by spraying a solution of phenothelene on the concrete substrate and recording the depth of the solution's color change. This will indicate to what depth carbon dioxide has progressed into the concrete. Carbon dioxide will degrade the cement matrix of the concrete and lower the pH level of it. The layer surrounding the reinforcement is then destroyed, allowing corrosion of the reinforcing steel. Corrosion by carbonization usually occurs over a broad area.

e. *Chloride Ion Content* - Chlorides from marine atmospheres or mists from road salts entering the concrete substrate, and salts originally introduced to the concrete via admixtures or aggregates can promote accelerated corrosion of reinforcing steel, usually at concentrated or specific locations. The chlorides are not consumed in the corrosion process but rather act as catalysts in the process. The corrosion will progress along the reinforcing bars causing concrete de-bonding, cracking, and spalling.

f. *Reinforcement Placement, Depth, Quantity, and Type* - This information may be established with the use of a Pachometer or similar electronic metal detector. It is useful in determining required steel replacement and structural capacities during engineering analysis phases.

21.0 Engineering Analysis

Using information obtained from the field, laboratory results, and collected data, a comprehensive engineering analysis may be required. The engineering analysis should include an assessment of field and laboratory data, structural analysis as well as the following:

- ✓ Thermal Analysis
- ✓ Drainage Analysis

- ✓ Vapor Drive Analysis
- ✓ Fire Rating Requirements
- ✓ Cost Estimations

22.0 Deficiencies and Non-Conformance

The Trade Subcontractor shall identify and list any outstanding deficiencies or procedures that were not completed successfully during any final testing. Documented deficiencies shall be submitted to WEBCOR/OBAYASHI within 48 hours of each test completion.

The Trade Subcontractor shall also provide in writing, the corrective action for each deficiency as required within 48 hours. The installing Trade Subcontractor and or vendor shall correct all outstanding issues or deficiencies in the materials or the installation of the materials and provide the commissioning team with dates and times for the required corrections and any re-testing.

23.0 Remedial Work

General considerations for the repair of defects and replacement of components should include the following:

23.1 Determine the effect, if any; the repairs have on the structure, surroundings, and operations of the building.

23.2 Ensure proper preparation of surfaces to be repaired and provide chemical and mechanical bonds for new materials.

23.3 Material selection should include an understanding of performance limitations and should rely on the products past acceptable performance. Material selections should include consideration of the following:

- ✓ Compatibility
- ✓ Maintenance
- ✓ Life cycle

24.0 Project Commissioning Closeout

WEBCOR/OBAYASHI, the Owner, and/or the Owner's representative shall determine when the Trade Subcontractor commissioning process has been satisfactorily completed and when to submit the final report information and all other documentation to Webcor.

As part of the project turnover, the quality of all work will be reviewed to determine whether it is within specific and manufacturers' guidelines, industry standards, and code compliance.

WEBCOR/OBAYASHI, the Owner, and/or the Owner's representative consultant must be completely satisfied that the commissioning procedures have been performed accurately and professionally.

In the event the commissioning information or performance requirements outlined in the Waterproofing Quality Commissioning Procedure & Guidelines have not been met, WEBCOR/OBAYASHI may elect to withhold or make appropriate adjustments to the Trade Subcontractor's final billing.